City of East Grand Forks

Americans with Disabilities Act

Transition Plan for Public Right of Way

June 2019

The preparation of this (report, map, document, etc.) was partially financed by FHWA/FTA Planning funds through the North Dakota Department of Transportation and Minnesota Department of Transportation. The opinion, findings, and conclusions expressed in this publication are those of the authors and not necessarily those of the MPO, NDDOT, MnDOT, or the FHWA/FTA.

RESOLUTION NO. 19 – 06 – 36

Council Member Vetter, supported by Council Member DeMers, introduced the following resolution and moved its adoption:

WHEREAS, the City Council must adopt a plan for ADA compliance within the City's Rights-of-Way; and

WHEREAS, the City of East Grand Forks asked the Grand Forks East Grand Forks MPO to hire a consultant to complete an ADA Transition Plan for our public Rights-of-Way; and

WHEREAS, the City of East Grand Forks, with the help of the MPO and a consultant has conducted a self-evaluation of its Public Rights-of-Way facilities throughout the City and has developed a Transition plan meeting the American with Disabilities Act (ADA); and

WHEREAS, This plan will detail how the city will ensure that those facilities will be accessible to all individuals and is specific to the maintenance, construction, and rehabilitation of these facilities within the public rights-of-way;

THEREFORE, BE IT RESOLVED BY THE CITY COUNCIL OF EAST GRAND FORKS, approves the City of East Grand Forks Transition Plan for Public Rights-of-way which includes evaluation and implementation of the Transition Plan.

Voting Aye: *DeMers, Vetter, Helms, Riopelle, Johnson, and Olstad.*
Voting Nay: *None.*
Absent: *Grassel.*

The President declared the resolution passed.

Passed: June 18, 2019

Attest:

City Administrator/Clerk-Treasurer

President of the Council

I hereby approve the foregoing resolution this 18th day of June, 2019.

Mayor

Table of Contents

Executive Summary 4
Introduction 5
Public Rights-of-Way 8
Transit Facilities 8
Self-Evaluation 8
Policies, Programs and Practices 9
Improvement Schedule 11
ADA Coordinator 14
Public Outreach 14
Public Comment 14
Grievance Procedure 14
Monitor the Progress 15
Management Database 15
Appendices 16
Appendix A – Self-Evaluation Results 17
Appendix B – Schedule and Budget for ADA Improvements 18
Appendix C – Public Outreach 22
Appendix D – Grievance Procedure 25
Appendix E – Contacts 30
Appendix F – City of East Grand Forks ADA Design Standards and Procedures 32
Appendix G – Glossary Terms 36

Executive Summary

The City of East Grand Forks ADA Transition Plan for Public Rights-of-Way is the summary of a three-phase approach to evaluating accessibility of the community's infrastructure and achieving compliance with the Americans with Disabilities Act. This plan includes documentation of the following:

- The purpose and need of the document, and a summary of applicable federal law related to accessibility
- Documentation of the City of East Grand Forks' policies and procedures related to accessibility of public rights-of-way
- Project field review guide
- Inventory of curb ramps and other facilities and their condition
- Public outreach efforts
- Required elements of an ADA Transition Plan – public comments, grievance procedure, appointment of ADA Coordinator, monitoring of the ADA Transition Plan, etc.

Through this effort, the City of East Grand Forks determined that 22 percent of inventoried facilities are compliant with ADA standards. The City of East Grand Forks set a policy goal of achieving compliance through scheduled updates over the next 30 years.

Introduction

Transition Plan Need and Purpose

The Americans with Disabilities Act (ADA), enacted on July 26, 1990, is a civil rights law prohibiting discrimination against individuals based on disability. ADA consists of five titles outlining protections in the following areas:

1. Employment
2. State and local government services
3. Public accommodations
4. Telecommunications
5. Miscellaneous Provisions

Title II of ADA pertains to the programs, activities and services public entities provide. As a provider of public transportation services and programs, City of East Grand Forks must comply with this section of the Act as it specifically applies to public service agencies. Title II of ADA provides that, "…no qualified individual with a disability shall, by reason of such disability, be excluded from participation in or be denied the benefits of the services, programs, or activities of a public entity, or be subjected to discrimination by any such entity." (42 USC. Sec. 12132; 28 CFR. Sec. 35.130)

As required by Title II of ADA, 28 CFR. Part 35 Sec. 35.105 and Sec. 35.150, the City of East Grand Forks has conducted a self-evaluation of its facilities within public rights of way and has developed this Transition Plan detailing how the organization will ensure that all the facilities are accessible to all individuals.

This Transition Plan applies to City of East Grand Forks Public-Rights-of-Way (City owned sidewalks, curb ramps, signals, pedestrian trails, transit shelters etc.), and other areas of ADA Compliance are inventoried under the auspices of other local documents. County, State, or Transit (Cities Area Transit) contacts and information may be found in APPENDIX E.

ADA and its Relationship to Other Laws

Title II of ADA is companion legislation to two previous federal statutes and regulations: the Architectural Barriers Acts of 1968 and Section 504 of the Rehabilitation Act of 1973.

The Architectural Barriers Act of 1968 is a Federal law that requires facilities designed, built, altered or leased with Federal funds to be accessible. The Architectural Barriers Act marks one of the first efforts to ensure access to the built environment.

Section 504 of the Rehabilitation Act of 1973 is a Federal law that protects qualified individuals from discrimination based on their disability. The nondiscrimination requirements of the law apply to employers and organizations that receive financial

assistance from any Federal department or agency. Title II of ADA extended this coverage to all state and local government entities, regardless of whether they receive federal funding or not.

Agency Requirements

Under Title II, City of East Grand Forks must meet these general requirements:

- Must operate their programs so that, when viewed in their entirety, the programs are accessible to and useable by individuals with disabilities (28 C.F.R. Sec. 35.150).
- May not refuse to allow a person with a disability to participate in a service, program or activity simply because the person has a disability (28 C.F.R. Sec. 35.130 (a).
- Must make reasonable modifications in policies, practices and procedures that deny equal access to individuals with disabilities unless a fundamental alteration in the program would result (28 C.F.R. Sec. 35.130(b) (7).
- May not provide services or benefits to individuals with disabilities through programs that are separate or different unless the separate or different measures are necessary to ensure that benefits and services are equally effective (28 C.F.R. Sec. 35.130(b)(iv) & (d).
- Must take appropriate steps to ensure that communications with applicants, participants and members of the public with disabilities are as effective as communications with others (29 C.F.R. Sec. 35.160(a).
- Must designate at least one responsible employee to coordinate ADA compliance [28 CFR Sec. 35.107(a)]. This person is often referred to as the "ADA Coordinator." The public entity must provide the ADA coordinator's name, office address, and telephone number to all interested individuals [28 CFR Sec. 35.107(a)].
- Must provide notice of ADA requirements. All public entities, regardless of size, must provide information about the rights and protections of Title II to applicants, participants, beneficiaries, employees, and other interested persons [28 CFR Sec. 35,106]. The notice must include the identification of the employee serving as the ADA coordinator and must provide this information on an ongoing basis [28 CFR Sec. 104.8(a)].
- Must establish a grievance procedure. Public entities must adopt and publish grievance procedures providing for prompt and equitable resolution of complaints [28 CFR Sec. 35.107(b)]. This requirement provides for a timely resolution of all problems or conflicts related to ADA compliance before they escalate to litigation and/or the federal complaint process.
- Must reference the ADA requirements specific to accessible transportation facilities as it applies to public right-of-way [49 CFR 37.9 and Subpart C] [United States Access Board Chapter 4: Accessible Routes].

This document has been created to specifically cover accessibility within the public rights-of-way and does not include information on the City of East Grand Forks programs, practices, or building facilities not related to public rights-of-way.

Public Rights-of-Way

In this plan public rights-of-way in the City of East Grand Forks include roadways and their adjacent facilities that serve a transportation purpose. This includes sidewalks, curb ramps, and signals. Public rights-of-way do not include buildings, publicly accessible technology, recreational trails and facilities, and private property. These are subject areas that are covered outside of Title II of ADA or other City of East Grand Forks documents.

Transit Facilities

The city of East Grand Forks partners with Cities Area Transit (CAT) in the development and deployment of transit facilities. These facilities include stops and shelters, and portions of the pedestrian network that approach these locations. Per 49 CFR 37.9(c) transit and transportation facilities in the public right-of-way must be accessible, and meet the standards set forth by the United States Access Board. A self-evaluation of transit shelter stops was done in May 2019. Many stops are curbside stops that will be better connected to the pedestrian network on an ongoing basis by CAT and City of East Grand Forks and will be addressed in other CAT planning and policy documents.

Self-Evaluation

Under Title II of the Americans with Disabilities Act (ADA) and in compliance with 28 CFR35.105, the city of East Grand Forks is required to perform a self-evaluation of its current transportation infrastructure policies, practices, and programs to identify programs which are insufficiently accessible. This self-evaluation specifically examines the accessibility of the City of East Grand Forks' pedestrian access route and public rights-of-way. Evaluations for each ADA feature class within public rights-of-way consisted of the following: curb ramps to include trail crossings at city roads; sidewalk control points to include every driveway; shared-use paths and trail facilities; and on-street transit facilities. In addition to compliance, the self-evaluation includes an attribute indicating which jurisdiction the ROW facility belongs to. With this information, the public ROW may be categorized visually by the jurisdiction (local, county, state, etc.).

An inventory of the current curb ramps, sidewalks, and signalized intersections were conducted during June 2018 in East Grand Forks. This evaluation inventory gives the opportunity to evaluate pedestrian facilities on a case by case basis and create an improvement schedule based upon priority areas. Currently, 17% of curb ramps are fully compliant with ADA standards; non-compliance in ramps is due to the ramp construction, noncompliant markings or tactile elements, signalization of the intersection, or a technically infeasible location.

Currently, 55% of signalized intersections with pedestrian indications are ADA compliant; signals did not meet Accessible Pedestrian Signal requirements when the landing is missing or inadequate, pushbuttons are not 10 feet apart, a vibrotactile pushbutton with an arrow in the correct direction is not present, and/or an audible indication is missing. Sidewalks are 27% ADA compliant; sidewalk deficiencies are typically the result of materials, lack of width, lack of adequate passing space, and/or slope.

The inventory will continue to be developed and monitored on an ongoing basis by City of East Grand Forks staff or project partners.

The inventory of pedestrian facilities within its public right-of-way consisted of the evaluation of the following facilities:

- 601 sidewalk points to equal 51.36 miles of sidewalk including shared use paths (27% compliant)
- 937 curb ramps (17% compliant)
- 44 accessible pedestrian signals (55% compliant)

A detailed evaluation on how these facilities relate to ADA standards is found in **APPENDIX A** and will be updated periodically.

As the City of East Grand Forks continues to implement its Capital Improvement Program (CIP), other public rights-of-way including sidewalks and other pedestrian linkages will be evaluated and improved for ADA compliance.

Field Manual for Data Collection

The field manual was developed to serve as a tool for the City's data collection process. The Field Manual includes all the materials used to conduct the field review of facilities and public rights-of-way for the City's future reference. In addition to detailed instructions and graphics, the guide contains steps to develop the GIS database. The GIS database is an online cloud-based mapping application. The purpose of the GIS database is to house the inventory of all existing ADA locations within the City with the capability to update, add, and share information as necessary. The database will serve as a management tool for the City. Field guide materials are attached in **APPENDIX F.**

Policies, Programs and Practices

In addition to the review of infrastructure, part of the self-evaluation also involves reviewing City policies and procedures. The City of East Grand Forks is committed to providing accessible services to all citizens and addressing the areas for improvement identified in the self-evaluation. The City of East Grand Forks will consider and respond to

all accessibility improvement requests. All accessibility improvements that have been deemed necessary to comply with ADA will be scheduled consistent with facility priorities.

All accessibility improvement requests can be submitted to the ADA Coordinator, see **APPENDIX D** for contact information.

City Policies

The City of East Grand Forks' goal is to continue to provide accessible pedestrian design features as part of the City of East Grand Forks capital improvement projects. The City of East Grand Forks will ensure that all new or updated pedestrian facilities are ADA compliant to the maximum extent feasible. The maintenance and construction of all pedestrian facilities within the public access route will follow the policies established by Title II of the ADA, and the guidelines established by Minnesota Department of Transportation (MnDOT) (see **APPENDIX F**). These standards and procedures will be kept up to date with nationwide and local best management practices. The following documents were reviewed as part of the self-evaluation. In addition to the City Policies, Polk County developed the Polk County Highway Department ADA Transition Plan. A copy of the Plan may be found in **APPENDIX F.**

ADA Transition Plan and Self Evaluation (2018)

The City of East Grand Forks is concurrently working on an ADA Transition Plan to be approved in 2019 that applies to all municipal services, facilities, programs and city parking lots only. However, this plan is focused on public rights-of-way and will address the following gaps in the citywide plan:

- The new plan will be updated to reflect the most current ADA guidance and design standards, including language developed by the Minnesota Local Roads Research Board (LRRB) and Proposed Guidelines for Accessible Rights-of-Way (PROWAG)
- The establishment of direct routes and areas of high pedestrian activity will be acknowledged as a factor for right-of-way project prioritization, but not a substitute for full ADA compliance.
- A field review specific to public rights-of-way will be updated to note the past twenty years of progress in meeting ADA compliance and more thoroughly noting where gaps exist.
- The City of East Grand Forks will have a separate grievance procedure for accessibility issues on its public right-of-way.

The City's Draft ADA Transition Plan and Self Evaluation may be found in **APPENDIX F.**

Capital Improvement Program (CIP)

Projects in the City of East Grand Forks CIP are listed and prioritized based on assessment of pavement condition, financial impacts and other technical analyses (ex. Safety, need for

signal improvements, development, etc.). The need for ADA updates and input from the public will be considered with programmed projects in the CIP. The CIP is intended to provide developers with information about future projects, local utility companies with notice of locations where utility work may be required in conjunction with a local street project to improve coordination, guide city staff in the allocation of resources, and support City code requirements. This plan incorporates the criteria for the CIP by reference.

Winter Maintenance Operations

Keeping pedestrian facilities reasonably clear of snow and ice is a component of ADA compliance. The City declares snow and ice existing on public sidewalk constitutes a public nuisance. Clearing public sidewalks of snow and ice is the responsibility of adjacent private property owner and/or tenant and is delineated in the City's ordinances. City Ordinance Chapter 96, Section 5 requires a property owner and/or occupant to clear snow and ice from adjacent public sidewalks within 12 hours following the end of a snow or ice event. No owner and/or occupant shall be required to remove snow and ice during the continuance of snowstorms. If an owner and/or occupant fails to clear the snow and ice within 24 hours after snow and ice ceased to fall, the City will remove it at the expense of the property owner and/or occupant. At the direction of the Council, the City Administrator will assess the cost and expense of such removal of snow and ice and extend the cost of removal as a special assessment against the lots or parcels adjacent to the public sidewalks, which were cleared. The special assessment will be certified for collection at the time of certifying taxes to the County Auditor. An alternative, the Council may direct the City Administrator to bring suit in a court of competent jurisdiction to recover the cost of clearing and the cost and disbursements of a civil action therefor.

Improvement Schedule

Types of Improvements

Typically, improvements will be made either as a retrofit or as a part of a capital project to address deficiencies in accessibility. The following are examples of projects that the City of East Grand Forks or its partners will undertake:

- Intersection corner ADA improvements
- Sidewalk/Trail ADA improvements (to include at-grade crossings and sidewalk ramps)
- Traffic control signal Accessible Pedestrian Signal upgrades

Rough estimates for the various types of improvements, using 2017-unit prices, are listed in Table 1 below.

Table 1: Improvement Cost Estimates

Infrastructure Element	Cost
Curb Ramp	$1,750-$2,500 per unit
Concrete Sidewalks	$8-$10 per square foot
Accessible Pedestrian Signals	$8,000-$12,000 per eight button intersection
Bus Shelter Improvements	$4,040 per shelter stop

The lower estimate includes the addition of eight APS buttons on existing infrastructure, while the higher estimate consists of a full improvement to include pushbuttons and pedestrian station. It is important to understand that much of these costs will be incorporated into existing and planned projects. Cost estimates are based on review of peer projects and are in calendar year 2017 dollars.

Prioritization

Prioritizing and scheduling of improvements will be established by the City of East Grand Forks City Staff. Factors that determine this include, but are not limited to severity of non-compliance, barriers to access a program, feasibility of remedies, safety concerns, and whether a location receives high public use. Consideration will also be given to locations that would most likely not be updated by other City programs. During the public input meeting held on October 4, 2018, attendees expressed that higher project prioritization be placed on areas completely without curb ramps over other spot improvements. Further, priority will be given to any location where an improvement project or alteration was constructed after January 26, 1991 (marking the formalization of ADA requirements), and accessibility features were omitted. Resident requests and location are also considerations for prioritizing improvements. To best use public resources, the priority areas for planned improvements projects were identified in the completion of this plan. These areas have been selected due to their proximity to specific land uses such as schools, government offices and medical facilities, as well as from the receipt of public comments. A list of priority areas within the City of East Grand Forks and a detailed description of priority area criteria can be found in **APPENDIX B.**

Public External Agency Coordination

Some external agencies are responsible for right-of-way pedestrian facilities within the jurisdiction of the City of East Grand Forks. The City will coordinate with those agencies to track and assist in the facilitation of eliminating accessibility barriers along their routes.

- MnDOT programmed ADA improvements include those along Demers Avenue (2023).

- At the time of this plan's development the Highway 220 Corridor Study is in progress. It is assumed that recommendations and improvements related to ADA will be developed through this study and may affect public right-of-way in the City of East Grand Forks.

Additionally, this Transition Plan supports the goals of other adopted planning documents that affect public right-of-way within the City of East Grand Forks planning area. External Agencies' plans may be found at the following links:

MnDOT ADA Transition Plan, 2015

http://www.dot.state.mn.us/ada/pdf/2014_TransitionPlanFinal.docx

Cities Area Transit (CAT)

http://www.grandforksgov.com/government/city-departments/cities-area-transit-cat

Contact information for each external agencies' ADA staff may be found in **APPENDIX E.**

Implementation Schedule

The City of East Grand Forks has set the following schedule goals for the improvement of accessibility to public right-of-way and pedestrian access routes:

- *Baseline of the City's total existing facilities' condition: 22% compliant including four sidewalk segments.*
- *After 10 years, 40% of accessibility features that were constructed after January 26, 1991, would be ADA compliant.*
- *After 20 years, 65% of accessibility features within the priority areas identified by East Grand Forks staff would be ADA compliant.*
- *After 30 years, 95% of accessibility features within the jurisdiction of East Grand Forks would be ADA compliant.*
- *On a yearly basis, shelter accessibility improvements are planned by CAT for one existing shelter facility per year.*

The 30-year time frame to achieve 95 percent accessibility and the required commitment of funding is framed as a policy goal. The availability of funding and future development trends in the City of East Grand Forks may affect how these projects are prioritized, and the timing of public right-of-way improvements may affect progress toward the compliance goal. As stated earlier in this document, ADA compliance will be achieved in two manners: 1) through scheduled improvements to utilities and public rights-of-way, and 2) through specific ADA retrofit projects. These projects will be determined by the city CIP or on a case by case basis determined by the ADA Coordinator and the City's grievance procedure. A

detailed schedule and budget for the CIP and specific projects can be found on the City's website at http://www.efg.mn

ADA Coordinator

In accordance with 28 CFR 35.107(a), the City of East Grand Forks has identified an ADA Title II Coordinator to oversee the City of East Grand Forks policies and procedures. Contact information for this individual can be found in **APPENDIX E**.

Public Outreach

Prior to the development of the Plan, a public input meeting and a focused discussion meeting were held on October 4, 2018 in the Training Room of East Grand Forks City Hall. The focus of the meeting was to gather public input on the ADA transition plan and provide guidance on prioritization. Stakeholders involved in the efforts included Options staff and various City Staff. Further details including the presentation and public comments may be found in **APPENDIX C.**

Public Comment

The ADA Transition Plan for Public Rights–of-Way was posted on the City of East Grand Forks ADA website and made available for public comment for approximately Number weeks prior to its recommendation for adoption. A link to the Plan and a public notice was distributed in December 2018. Additionally, the draft version of the Plan was distributed to key stakeholders including school administrators, local senior centers, and businesses and service centers that have been identified as high priority areas for right-of-way improvements. The City will make a reasonable effort to incorporate public comments into the final version of the report. A printed hard copy of the draft document is also available for review at City of East Grand Forks City Hall, 600 DeMers Avenue, East Grand Forks, MN 56721.

Further detail is included in **APPENDIX C.**

Grievance Procedure

Under the Americans with Disabilities Act, each agency is required to publish its responsibilities regarding the ADA. A version of this public notice is provided in **APPENDIX D.** If users of City of East Grand Forks' facilities and services believe the City has not provided reasonable accommodation, they have the right to file a grievance.

To monitor the progress of compliance, the City of East Grand Forks, in accordance with 28 CFR 35.107(b), has established a grievance procedure for the prompt and equitable resolution of comments, concerns or questions from the citizens of East Grand Forks. The ADA grievance form is available online and at City Hall and can be returned to the ADA Coordinator. The form may be used by anyone wishing to file a complaint, comment, or concern regarding discrimination based on disability. A sample of the Grievance Form can be found in **APPENDIX D.**

Monitor the Progress

The City of East Grand Forks' ADA Transition Plan for Public Rights of Way is an evolving document requiring periodic updates as conditions within the city change. The City will evaluate the Plan as projects progress and complete updates to the document as necessary. At a minimum, the City will update the plan every 5 years. The update will document the changes that occurred from the base year described in the Implementation Schedule on page 12. The City of East Grand Forks will establish a public comment period with each future modification to the main body of the plan.

Management Database

As a part of the development of the draft plan, the City of East Grand Forks implemented a management system through their existing GIS geodatabase to improve prioritization and scheduling. The City's geodatabase joined with the facilities' inventory survey, which was completed during the development of the draft, and serves as a tracking system that may be used to identify the City's progress in achieving complete ADA compliance. Through strict and consistent collection procedures established by the City, projects in remediation will be periodically assessed and re-defined as "scheduled," "in progress/in-design," and "completed" within the management system to ensure the most accurate information is available. With access to the most up-to-date information, the City of East Grand Forks may efficiently map and identify future improvements based on the CIP. Additionally, categories and priorities may change over time, along with state and federal accessibility policies. It is intended that as projects are completed and policies are updated the geodatabase can accommodate these changes.

Appendices

A. Self-Evaluation Results

B. Schedule and Budget for ADA Improvements

C. Public Outreach

D. Grievance Procedure

E. Contacts

F. City of East Grand Forks ADA Design Standards and Procedures

G. Glossary of Terms

Attachments

A-1: Facility Inventory Report

C-1: Public Input Meeting Presentation

F-1: City of East Grand Forks Transition Plan and Self-Evaluation (2018)

F-2: Polk County Transition Plan

F-3: PROWAG

F-4: Minnesota Accessibility Code

F-5: City of East Grand Forks ADA Transition Plan Inventory Manual

F-6: Applicable forms, checklists, maps, etc.

Appendix A – Self-Evaluation Results

Data Collection for the city of East Grand Forks Self-Evaluation occurred in the Summer of 2018. An Americans with Disabilities Act (ADA) consultant and their staff completed the Data Collection inventory through a GPS application.

At the time of the inventory the City of East Grand Forks was following general ADA design guidance and procedures, which included a commitment to providing access to all users but did not have any formal policies or practices regarding ADA accessibility within the public Right-of-Way transportation system.

This initial self-evaluation of pedestrian facilities yielded the following results:

Figure 1: Self Evaluation Results

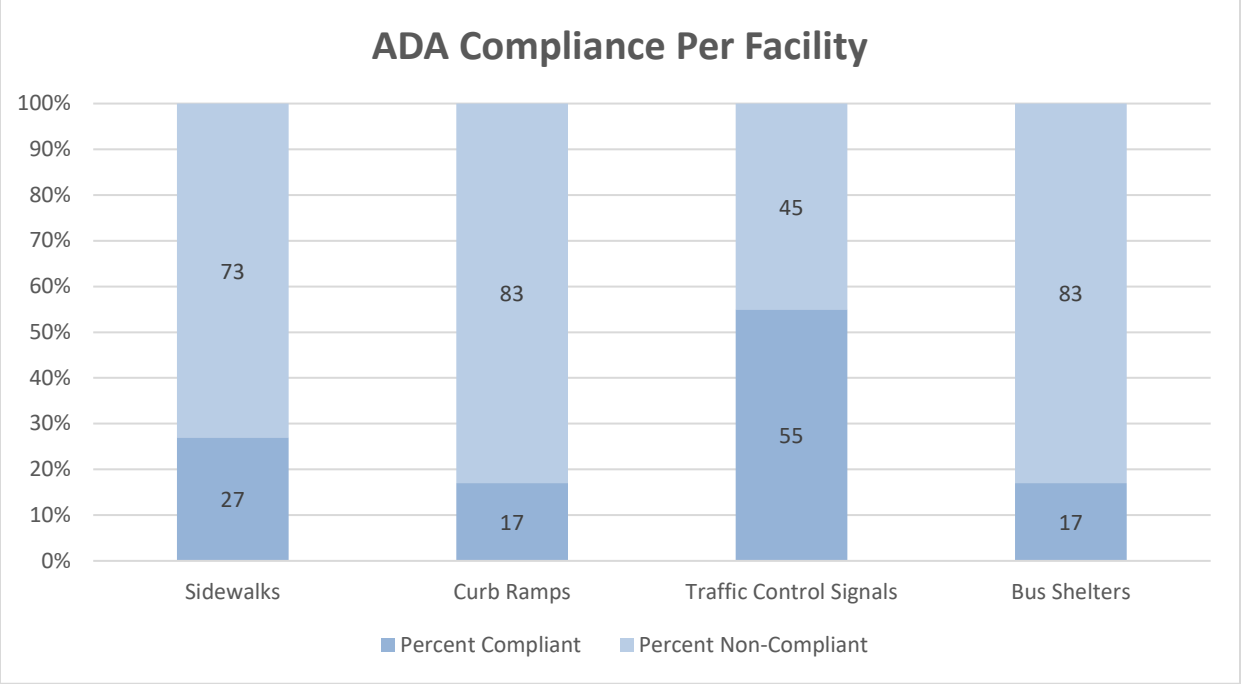

Figure represents percent ADA compliance for city.

Chart Description: Twenty-seven percent of sidewalks were ADA compliant. Seventeen percent of curb ramps were ADA compliant. Fifty-five percent of traffic control signals were ADA compliant. Seventeen percent of bus shelters were ADA compliant.

Appendix B – Schedule and Budget for ADA Improvements

Cost Estimates

Unit Prices

Construction costs for upgrading facilities can vary depending on each individual improvement and conditions of each site. Costs can also vary on the type and size of project the improvements are associated with. Listed below are representative 2017 costs for some typical accessibility improvements based on if the improvements are included as part of a retrofit type project, or as part of a larger comprehensive capital improvement project.

Concrete Sidewalk / Trail ADA improvement retrofit: +/- $8.00 - $10.00 per square foot

Curb Ramp ADA improvement retrofit: +/- $1750 - $2500 each

Traffic control signal APS upgrade for entire intersection: +/-$8,000 - $12,000 each

Single Traffic control signal pushbutton station replacement +/- $1500 each

For the entire jurisdiction's budgeting purpose, the cost to improve a concrete sidewalk was estimated to be $10 per square foot and a single curb ramp was estimated to be $2500.

Jurisdiction

Based on the results of the self-evaluation, the estimate costs associated with providing ADA accessibility within the total jurisdiction is $1,981,890. Table 2 provides cost estimates by jurisdiction by facility. However, the indicated jurisdiction is not necessarily responsible for these costs. The table identifies how improvement costs are distributed between local, county, and state rights-of-way. The intent of these tables and summaries is to inform future plans and investment decisions. Additionally, it is typical for these costs to be included as a portion of an overall project, rather than a stand-along ADA upgrade or improvement and that is also a consideration for decision-makers. The City of East Grand Forks will take a systematic approach to providing accessibility to absorb the cost into the City's budget for improvements to the public right of way.

Table 2 Jurisdictional Cost Estimates by Facility

Curb Ramp				
Jurisdiction	**Unit Cost**	**Unit**	**Points Collected**	**Cost**
Local	$2,500.00	EA	747	$1,867,500
County	$2,500.00	EA	0	$0
State	$2,500.00	EA	32	$80,000
Total			779	$1,947,500
Sidewalks				
Jurisdiction	**Unit Cost**	**Unit**	**Points Collected**	**Cost**
Local	$10.00	SF	439	$4,390.00
County	$10.00	SF	0	$0
State	$10.00	SF	0	$0
Total			439	$4,390.00
Accessible Pedestrian Signals				
Jurisdiction	**Unit Cost**	**Unit**	**Points Collected**	**Cost**
Local	$1,500.00	EA	8	$12,000
County	$1,500.00	EA	0	$0
State	$1,500.00	EA	12	$18,000
Total				$30,000
Bus Shelter				
Jurisdiction	**Unit Cost**	**Unit**	**Points Collected**	**Cost**
Local	$4,040.00	EA	5	$20,200
County	$4,040.00	EA	0	$0
State	$4,040.00	EA	0	$0
Total				$20,200

Prioritization Areas

The City of East Grand Forks has established the following criteria to establish priority levels. The City will consider all resident requests as received, which may affect the prioritization levels when appropriate.

Highest priority—Category 1A: Gap in Facilities in a High Priority Area

- No curb ramp where sidewalk or pedestrian path exists and location near a medical center, school, transit facility, government building, non-auto dependent households or similar facility.

Category 1B: Poor Facility in a High Priority Area

- Existing curb ramp with a noncompliant running slope and location near a medical center, school, transit facility, government building or similar facility.

Category 2A: Gap in Facilities

- No curb ramp where a sidewalk or pedestrian path exists (not located near a medical center or similar facility).

Category 2B: Poor Facility

- An existing curb ramp with a noncompliant running slope (not located near a medical center or similar facility).

Category 3: Inaccessible Crosswalk

- No curb ramp where a striped crosswalk exists.

Category 4: Incomplete Intersection

- One curb ramp per corner and another is needed to serve the other crossing direction.

Category 5A: Curb Ramp with Poor Landing

- An existing curb ramp with an insufficient landing.

Category 5B: Obstructed Curb Ramp

- An existing curb ramp with obstructions in the ramp or the landing.

Category 5C: Non-Compliant Curb Ramp

- An existing curb ramp with any of the following conditions:
    - A cross slope greater than 2%
    - A width less than 48 inches
- No flush transition or median, or island crossings that are inaccessible.

Category 5D: Curb Ramp in Poor Location

- An existing curb ramp with returned curbs where pedestrian travel across the curb is not permitted.

Category 5E: No Crosswalk Extension

- An existing diagonal curb ramp without the 48-inch extension in the crosswalk.

Category 5F: Lack of Tactile Indicator

- An existing curb ramp without truncated dome texture contrast or without color contrast.

Lowest Priority – Category 6: Non-Compliant Signal or Push Button

- The pedestrian pushbutton is not accessible from the sidewalk or from the ramp.

Transit Improvement Prioritization Areas

While most of the general improvement priorities for Transit Facilities will mirror the geographic and condition criteria identified in the six categories above, several transit factors can also be considered when determining phasing of ADA related improvements.

Lack of Safe Landing Pad – Areas with bus stops that do not have a paved area for transit passengers who use mobility devices to safely board and alight transit vehicles using lifts or ramps.

Insufficient Sidewalk Connections – Areas that may have boarding pads, but lack sidewalk or trail connections to/from the boarding pad.

Appendix C – Public Outreach

The City of East Grand Forks recognizes that public participation is an important component in the development of this document. Input from the community has been gathered and used to help define priority areas for improvements within the jurisdiction of the City of East Grand Forks.

As part of the ADA Transition Plan's development process, the City of East Grand Forks posted the draft plan document on the City website at http://www.egf.mn/, and made it available for public comment for a period of fifteen days on December 6, 2018. Additionally, a printed copy of the draft plan was made available at the City of East Grand Forks City Hall, 600 DeMers Avenue, East Grand Forks, MN 56721.

To whom it may concern:

The City of East Grand Forks is seeking input from the public on its draft plan to support accessibility for people using its facilities. We invite you to review the draft version of the plan, posted on the City's website http://www.egf.mn as it is being finalized. Feel free to distribute this email to your colleagues, or other that may find this plan to be of interest. The purpose of this notice is to introduce the ADA Transition Plan to the public and inform those that work in "priority areas" related to accessibility about the City's work thus far. Any comments that you provide may be incorporated into the final version of the plan and help the City of East Grand Forks to identify key areas for improvement, including curb ramps, sidewalks, and traffic signals.

If you need a reasonable accommodation, assistance, or require more information please contact the City East Grand Forks ADA Coordinator, Nancy Ellis.

Thank you for your input,

City of East Grand Forks

Comments received during this period can be found in the following pages of this Appendix.

Record of Public Outreach Summary

A public input and focused discussion meeting were held on October 4, 2018 in the Training Room of East Grand Forks City Hall to gather public input on the ADA transition plan. Officials from the City of East Grand Forks, the Grand Forks-East Grand Forks MPO, and Options: Resource Center for Independent Living were present along with members of the consultant team (SRF Consulting Group).

Most of the discussion during the meeting was educational regarding the purpose and need of the ADA Transition Plan. Visualization of data was also provided for review and as a discussion point. The only point of feedback on project prioritization was that for people with disabilities who navigate the City, areas completely without curb ramps should receive higher priority over other spot improvements. The City and partners received positive feedback for undertaking the ADA Transition Plan effort.

Public Meeting Advertisement

PUBLIC INPUT NEEDED

ADA Transition Plan Open House

The Grand Forks-East Grand Forks Metropolitan Planning Organization (MPO) and the City of East Grand Forks is preparing an ADA Transition Plan for the City Of East Grand Forks. The Plan will:

- Establish a methodology for evaluation of Public Right-Of-Way,
- Evaluate the Public Right-Of-Way for ADA compliance,
- Establish contacts of responsible City Staff,
- Establish City Policies and Practices in reference to ADA, and
- Establish a prioritization plan and improvement schedule.

The public is encouraged to attend the Open House to provide input and feedback on issues or priorities when it comes to accessibility to Public Rights-Of-Way.

ADA Transition Plan Public Open House

October 4th, 2018
East Grand Forks City Hall- Training Room
600 DeMers Ave
5:00 PM to 6:30 PM

For more information regarding the ADA Transition Plan, please contact:

Teri Kouba, GF-EGF MPO – teri.kouba@theforksmpo.org

The GF-EGFMPO will make every reasonable accommodation to provide an accessible meeting facility for all persons. Appropriate provisions for the hearing and visually challenged or persons with limited English Proficiency (LEP) will be made if the meeting conductors are notified 5 days prior to the meeting date, if possible. To request language interpretation, an auxiliary aid or service (i.e., sign language interpreter, accessible parking, or materials in alternative format) contact Earl Haugen of GF-EGFMPO at 701-746-2660. TTY users may use Relay North Dakota 711 or 1-800-366-6888. . Materials can be provided in alternative formats: large print, Braille, cassette tape, or on computer disk for people with disabilities or with LEP by Earl Haugen of GF-EGFMPO at 701-746-2660. TTY users may use Relay North Dakota 711 or 1-800-366-6888.

Appendix D – Grievance Procedure

Under the ADA, each agency is required to publish its responsibilities regarding the ADA. A draft of this public notice is provided in **APPENDIX C**. If users of public rights-of-way believe the City of East Grand Forks has not provided reasonable accommodation, they have the right to file a grievance.

In accordance with 28 CFR 35.107 (b), the City has developed the following grievance procedure for the prompt and equitable resolution of citizens' complaints, concerns, comment, and other grievances.

The City understands that members of the public may desire to contact staff and discuss ADA issues without filing a grievance. Members of the public wishing to contact the ADA Coordinator, listed in **APPENDIX E**, are encouraged to do so. Contacting staff to informally discuss ADA issues is welcome and does not limit a person's ability or right to file a formal grievance later.

As per ADA requirements, the City has posted a notice outlining its responsibilities. This notice can be found in this Appendix.

The city appreciates and welcomes your comments. The grievance form should be submitted by the grievant and/or his/her designee as soon as possible, but no later than 60 calendar days after the alleged violation. To provide feedback, please complete a grievance form located in the following pages (p.24-25), or contact the ADA Coordinator listed in **APPENDIX E.**

Those wishing to file a written grievance with the City of East Grand Forks may do so by one of the following methods:

Internet

Visit the City of East Grand Forks website (http://www.egf.mn/) to locate the ADA Grievance Form. Fill in the form online and click "submit." A copy of The ADA Grievance Form is included in this Appendix.

Telephone

Contact the ADA Coordinator listed in the Contact Information section of Appendix E to submit an oral grievance. The staff person will utilize the Internet method above to submit the grievance on behalf of the person filing the grievance.

Paper Submittal

Contact the pertinent East Grand Forks staff person listed in the Contact Information section of Appendix E to request a paper copy of the city's grievance form, complete the

form, and submit it to the ADA Coordinator. A staff person will utilize the Internet method above to submit the grievance on behalf of the person filing the grievance.

After a grievance form is submitted, the following actions will take place:

- Within 15 calendar days after receipt of the complaint, the ADA Coordinator or designee will meet with the complainant to discuss the complaint and possible resolutions.
- Within 15 calendar days of the meeting, the ADA Coordinator or designee will respond in writing, and where appropriate, in a format accessible to the complainant, such as large print, Braille, or audio recording.
- If the response by the ADA coordinator or designee does not satisfactorily resolve the issues, the complainant and/or his/her designee may appeal the decision within 15 calendar days receipt of the response to the contact or his/her designee.
- Within 15 calendar days after receipt of the appeal, the Human Resources contact, or his/her designee will meet with the complainant to discuss the complaint and possible resolutions.
- The Human Resources contact, or his/her designee will respond in writing, and, where appropriate, in a format accessible to the complainant, with a final resolution of the complaint within 15 calendar days after meeting with the complainant.

All communication between the complainant, ADA Coordinator or designee and/or Human Resources will be retained by the City for at least three years.

Public Notice

In accordance with the requirements of Title II of the Americans with Disabilities Act (ADA) of 1990, the City of East Grand Forks will not discriminate against qualified individuals with disabilities on the basis of disability in City's services, programs, or activities.

Employment: The City does not discriminate on the basis of disability in its hiring or employment practices and complies with all regulations promulgated by the U.S. Equal Employment Opportunity Commission under title I of the Americans with Disabilities Act (ADA).

Effective Communication: The City will generally, upon request, provide appropriate aids and services leading to effective communication for qualified persons with disabilities so they can participate equally in the City's programs, services, and activities, including qualified sign language interpreters, documents in Braille, and other ways of making information and communications accessible to people who have speech, hearing, or vision impairments.

Modifications to Policies and Procedures: The City will make all reasonable modifications to policies and programs to ensure that people with disabilities have an equal opportunity to enjoy all City programs, services, and activities. For example, individuals with service animals are welcomed in City offices, even where pets are generally prohibited.

Anyone who requires an auxiliary aid or service for effective communication, or a modification of policies or procedures to participate in a City program, service, or activity, should contact the office of ADA Coordinator as soon as possible but no later than 48 hours before the scheduled event.

The ADA does not require the City to take any action that would fundamentally alter the nature of its programs or services or impose an undue financial or administrative burden.

The City will not place a surcharge on an individual with a disability or any group of individuals with disabilities to cover the cost of providing auxiliary aids/services or reasonable modifications of policy, such as retrieving items from locations that are open to the public but are not accessible to persons who use wheelchairs.

ADA Grievance Form

Please fill out this form completely, in black ink or type. If you need any accommodation or assistance in completing this form, please contact the ADA Coordinator, Nancy Ellis, at 218-773-0124 or nellis@eg.mn. Sign and return to Nancy Ellis, ADA Coordinator at 600 DeMers Avenue, East Grand Forks, MN 56721.

This ADA Grievance Form is for the use of complaints, concerns, and other grievances associated with the City of East Grand Forks' public rights-of-way. If one wishes to file a grievance form for the CAT, please refer to the following:

Cities Area Transit http://www.grandforksgov.com/home/showdocument?id=22429

Section I –Discrimination Description

Date of Alleged Discrimination (Month, Day, Year): _____

Have efforts been made to resolve this complaint? Yes ☐ No ☐

If yes, what is the status of the grievance? _____

Has the complaint been filed with the Department of Justice or any other Federal, State or local civil rights agency or court? Yes ☐ No ☐

If Yes:

Agency or Court: _____

Contact Name: _____ Contact Title: _____

Agency Name: _____ Phone: _____

Description of Grievance/Discrimination: _____

_____

_____

Section II – Complainant Information

Complainant Name: _____

Street Address: _____

City: _____ State: _____ Zip: _____

Home Phone: _____ Work Phone: _____

Mobile Phone: _____ Email: _____

Preferred method of communication: Mail ☐ Email ☐ Phone ☐

Section III – Completed by

Are you filling this complaint out on your own behalf? Yes ☐ No ☐

If Yes, complete **Section III**

If No, please supply the name and relationship of the person for whom you are complaining:

First and last name of person for whom you are filling: _____

Relationship of the person for whom you are filling: _____

Please explain why you have filed for a third party: _____

Please confirm that you have obtained the permission of the aggrieved party, if you are filing on behalf of a third party. Yes ☐ No ☐

Section IV – Previous

Have you previously filled an ADA complaint with this agency? Yes ☐ No ☐

Section VI – Remedy Sought

State the specific remedy sought to resolve the issues (s): _____

_____

_____

_____

You may attach any written or other information that you this is relevant to your complaint.

Signature: _____ Date: _____

I sincerely and truly declare and affirm that the facts contained herein are complete, accurate, and true to the best of my knowledge and belief. Further, I declare and affirm that my statement has been made by me voluntarily without persuasion, coercion, or promise of any kind.

Appendix E – Contacts

City of East Grand Forks	• **Responsible for**: City-owned right-of-way: sidewalks, trails, curb ramps, driveways, and signals • **Associated staff may inlcude**: ADA Coordinator, Planning Staff, Public Works staff
Cities Area Transit	• **Responsible for:** Bus stops, shelters, transit operations, and portions of appraching pedestrian network • **Associated staff may inlcude:** Transit Manager, Mobility Manager, Fleet and Facilities Manager, East Grand Forks ADA Coordinator
Polk County	• **Responsible for:** County-owned right-of-way (e.g. County Roads) • **Associated staff may inlcude:** ADA Coordinator, Transportation Engineer, Civil Engineer, Public Works staff
MnDOT	• **Responsible for:** State-owned right-of-way (e.g. state highways) • **Associated staff may inlcude:** ADA Coordinator, Transportation Engineer, Civil Engineer, Public Works staff

Current ADA Contact Information

City of East Grand Forks

ADA Coordinator

Name: Nancy Ellis
Address: 600 DeMers Avenue
East Grand Forks, MN 56721
Phone: 218-773-0124
E-mail: nellis@egf.mn

Cities Area Transit

ADA Coordinator

Name: Ali Rood, Mobility Manager
Address: 450 Kittson Avenue
Grand Forks, ND 58201
Phone: 701-757-1503
Email: arood@grandforksgov.com

Polk County

ADA Contact – Highway Department

Name: Richard Sanders
Address: 820 Old Highway 75 South
Crookston, MN 56716
Phone: 218-470-8253
Email form: https://www.co.polk.mn.us/index.asp?SEC=C9D0F3CC-A878-413A-AAF6-585173F9983A&Type=QUICKFORM

Minnesota Department of Transportation

ADA Contact

Kristie Billiar
Kristie.billiar@state.mn.us
651-366-3174

Appendix F – City of East Grand Forks ADA Design Standards and Procedures

City of East Grand Forks- Public Rights-of-Way

Design and Maintenance Procedures

The City of East Grand Forks follows the guidance provided by the Unites States Department of Transportation (USDOT) and United States Department of Justice (US DOJ) on what constitutes a maintenance project and what constitutes an alteration project.

Maintenance projects include the following work types:

- Crack Filling and Sealing
- Surface Sealing
- Slurry Seals
- Fog Seals
- Scrub Sealing
- Joint Crack Seals
- Joint repairs
- Dowel Bar Retrofit
- Spot High-Frication Treatments
- Diamond Grinding
- Pavement Patching

Alteration Projects include the following work types:

- Open-graded Surface Course
- Cape Seals
- Mill and Fill/Mill and Overlay
- Hot In-Place Recycling
- Microsurfacing/Thin Lift Overlay
- Addition New Layer of Asphalt
- Asphalt and Concrete Rehabilitation and Reconstruction
- New Construction

Intersection Corners

Curb ramps or blended transitions will attempt to be constructed or upgraded to achieve compliance within all capital improvement projects. There may be limitations which make it technically infeasible for an intersection corner to achieve full accessibility within the

scope of any project. Those limitations will be noted, and those intersection corners will remain on the transition plan. As future projects or opportunities arise, those intersection corners shall continue to be incorporated into future work. Regardless if full compliance can be achieved or not, each intersection corner shall be made as compliant as possible in accordance with the judgment of City staff.

Sidewalks / Trails

Sidewalks and trails will attempt to be constructed or upgraded to achieve compliance within all capital improvement projects. There may be limitations which make it technically infeasible for segments of sidewalks or trails to achieve full accessibility within the scope of any project. Those limitations will be noted, and those segments will remain on the transition plan. As future projects or opportunities arise, those segments shall continue to be incorporated into future work. Regardless if full compliance can be achieved or not, every sidewalk or trail shall be made as compliant as possible in accordance with the judgment of City staff.

Accessible Pedestrian Signals

The purpose of this document is to provide guidance for the City of East Grand Forks on 1) the installation of Accessible Pedestrian Signals (APS) for new construction and existing traffic signal modifications, and 2) the evaluation of existing traffic signal locations after receipt of a reasonable accommodation request for APS installation.

This guidance is specific to APS and the incorporation of APS equipment and functionality into new, modified, and existing traffic signals.

The City of East Grand Forks based this guidance on existing practice and the following: 1) Guidelines for Accessible Pedestrian Signals, APS Prioritization Tool - NCHRP 3-62, 2) Guidelines for Accessible Pedestrian Signals, Final Report – NCHRP 117B, and 3) Accessible Pedestrian Signals: A Guide to Best Practices (Workshop Edition 2010) – NCHRP 150. Per the Minnesota Manual on Uniform Traffic Control Devices (MnMUTCD), an APS is “a device that communicates information about pedestrian timing in nonvisual format such as audible tones, speech messages, and/or vibrating surfaces.” (MnMUTCD, December 2011, Section 1A, page 14).

New Construction of Traffic Signals

At proposed traffic signal locations with any pedestrian elements (countdown timers, marked crosswalks, pedestrian indicators, pedestrian ramps, sidewalk/trail, etc.), whether existing or part of the proposed construction, the city will install an APS traffic signal.

The City will not consider an APS traffic signal for any crossing leg where a pedestrian crossing of that leg is a prohibited movement.

Existing Traffic Signals

The City, after receipt of a reasonable accommodation request for an Accessible Pedestrian Signal (APS) at an existing traffic signal location, shall evaluate the intersection and each crosswalk at the location.

As part of the City's evaluation of a reasonable accommodation request, a meeting between city staff and the person requesting the APS traffic signal will take place at the intersection. The purpose of the meeting would be to ensure that the city fully understands the request and its context and determine if there are other viable accommodations available (e.g. increase the pedestrian walk or clearance times, increase pedestrian understanding of the traffic signal operations, etc.). In addition, the pedestrian's routes of travel should be determined at the meeting.

In its evaluation, engineering department staff may refer to evaluation tools used by peer agencies or other industry standards to determine whether the signal merits immediate modification. Additionally, the department may, based on a balancing of several factors including engineering judgment and the context of the location, install an APS traffic signal even though the evaluation results of the crosswalk by means of this APS evaluation tool do not meet the threshold.

The City will not consider an APS traffic signal for any crossing leg where a pedestrian crossing of that leg is a prohibited movement. The City will consider any upcoming traffic signal or capital projects that are funded, or in the scoping or design phase, in its response to a request to evaluate and/or modify an existing traffic signal as an APS traffic signal (i.e. if construction of a capital project is anticipated the City may elect to postpone such modification and include it in the capital project).

Scheduling

Many factors go into the timing and scheduling for installation of APS traffic signals:

- APS equipment items are unique and project ordering and receiving requires an extended lead time.
- Depending on the timing of the request and the extent of the work required, the department may schedule requests during the following construction season.
- APS installations that require the upgrade of the existing traffic signal controller hardware, the installation of electrical conduits, or pedestrian ramp construction will have an increased schedule length.

For the medication and review of existing traffic signals for the installation of APS, the scheduling of the installation will consider an upcoming capital projects (i.e. if construction of a capital project is anticipated within a year, the City may elect to postpone such modification and include it in the capital project that is funded or in the scoping or design phase).

Bus Stops

Bus stops will attempt to be constructed or upgraded to achieve compliance within all capital improvement projects. There may be limitations which make it technically infeasible for individual bus stop locations to achieve full accessibility within the scope of any project. Those limitations will be noted, and those locations will remain on the transition plan. As future projects or opportunities arise, those locations shall continue to be incorporated into future work. Regardless on if full compliance can be achieved or not, each bus stop location shall be made as compliant as possible in accordance with the judgment of City staff.

Other Transit Facilities

Additional transit facilities are present within the limits of City of East Grand Forks. Those facilities fall under the jurisdiction of CAT. The City of East Grand Forks will work with CAT to ensure that those facilities meet all appropriate accessibility standards. CAT is operated jointly by the cities of East Grand Forks, MN and Grand Forks, ND.

Transit Design Standards

City of East Grand Forks has PROWAG, as adopted by MnDOT, as its design standard. Links to the most current applicable design standards are included in **ATTACHMENT F-2.**

Additionally, design standards for transit facilities and accessible routes can be found in FTA's Circular on ADA, C 4710.1. https://www.transit.dot.gov/regulations-and-guidance/fta-circulars/americans-disabilities-act-guidance-pdf.

Appendix G – Glossary Terms

ABA: See Architectural Barriers Act.

ADA: See Americans with Disabilities Act.

ADA Transition Plan: Mn/DOT's transportation system plan that identifies accessibility needs, the process to fully integrate accessibility improvements into the Statewide Transportation Improvement Program (STIP), and ensures all transportation facilities, services, programs, and activities are accessible to all individuals.

ADAAG: See Americans with Disabilities Act Accessibility Guidelines.

Accessible: A facility that provides access to people with disabilities using the design requirements of the ADA.

Accessible Pedestrian Signal (APS): A device that communicates information about the WALK phase in audible and vibrotactile formats.

Alteration: A change to a facility in the public right-of-way that affects or could affect access, circulation, or use. An alteration must not decrease or have the effect of decreasing the accessibility of a facility or an accessible connection to an adjacent building or site.

Americans with Disabilities Act (ADA): The Americans with Disabilities Act; Civil rights legislation passed in 1990 and effective July 1992. The ADA sets design guidelines for accessibility to public facilities, including sidewalks and trails, by individuals with disabilities.

Americans with Disabilities Act Accessibility Guidelines (ADAAG): contains scoping and technical requirements for accessibility to buildings and public facilities by individuals with disabilities under the Americans with Disabilities Act (ADA) of 1990.

APS: See Accessible Pedestrian Signal.

Architectural Barriers Act (ABA): Federal law that requires facilities designed, built, altered or leased with Federal funds to be accessible. The Architectural Barriers Act marks one of the first efforts to ensure access to the built environment.

Capital Improvement Program (CIP): The CIP for the Transportation Department includes an annual capital budget and a five-year plan for funding the new construction and reconstruction projects on the county's transportation system.

Detectable Warning: A surface feature of truncated domes, built in or applied to the walking surface to indicate an upcoming change from pedestrian to vehicular way.

DOJ: See United States Department of Justice

Federal Highway Administration (FHWA): A branch of the US Department of Transportation that administers the federal-aid Highway Program, providing financial assistance to states to construct and improve highways, urban and rural roads, and bridges.

FHWA: See Federal Highway Administration

Pedestrian Access Route (PAR): A continuous and unobstructed walkway within a pedestrian circulation path that provides accessibility.

Pedestrian Circulation Route (PCR): A prepared exterior or interior way of passage provided for pedestrian travel.

PROWAG: An acronym for the *Guidelines for Accessible Public Rights-of-Way* issued in 2005 by the U. S. Access Board. This guidance addresses roadway design practices, slope, and terrain related to pedestrian access to walkways and streets, including crosswalks, curb ramps, street furnishings, pedestrian signals, parking, and other components of public rights-of-way.

Right of Way: A general term denoting land, property, or interest therein, usually in a strip, acquired for the network of streets, sidewalks, and trails creating public pedestrian access within a public entity's jurisdictional limits.

Section 504: The section of the Rehabilitation Act that prohibits discrimination by any program or activity conducted by the federal government.

Uniform Accessibility Standards (UFAS): Accessibility standards that all federal agencies are required to meet; includes scoping and technical specifications.

United States Access Board: An independent federal agency that develops and maintains design criteria for buildings and other improvements, transit vehicles, telecommunications equipment, and electronic and information technology. It also enforces accessibility standards that cover federally funded facilities.

United States Department of Justice (DOJ): The United States Department of Justice (often referred to as the Justice Department or DOJ), is the United States federal executive department responsible for the enforcement of the law and administration of justice.

OBJECTID	APS_ButtonPush button <=5' of outside edge of cross walk?	Push button face oriented parallel w/ crosswalk?	Is there a level landing 4" x 4" adj to push button?	Push button btwn 1.5' and 10' from back of curb?	Is there 10' of separation between push buttons?	Push button mounted between 42" and 48"?	Is a 4' PAR w/ 2% cross slope maintained?	Is there an audible walk indication?	Is there a vibrotactile arrow present and pointed in the correct direction?	Notes	last_edited_date	# of Non Compliant	Overall Compliant	Jurisdiction
2	1	1	1	1	0	1	1	1	1		6/25/2018	1	NO	State
3	1	1	1	1	1	1	1	1	1		6/25/2018	0	YES	State
4	1	1	1	1	1	1	1	1	1		6/25/2018	0	YES	State
5	1	1	1	1	0	1	1	1	1		6/25/2018	1	NO	State
6	1	1	1	1	1	1	1	1	1		6/26/2018	0	YES	State
7	1	1	1	1	1	1	1	1	1		6/26/2018	0	YES	State
8	1	1	1	1	0	1	1	1	1		6/26/2018	1	NO	State
9	1	1	1	1	1	1	1	1	1		6/26/2018	0	YES	State
10	1	1	1	1	1	0	1	1	1	40" to button	6/26/2018	1	NO	State
11	1	1	1	1	1	1	1	1	1		6/26/2018	0	YES	State
12	1	1	1	1	1	1	1	1	1		6/26/2018	0	YES	State
13	1	1	1	1	1	1	1	1	1		6/26/2018	0	YES	State
14	1	1	1	1	1	1	1	1	1		6/26/2018	0	YES	State
15	1	1	1	1	1	1	1	1	1		6/26/2018	0	YES	State
16	1	1	1	1	1	1	1	1	1		6/26/2018	0	YES	State
17	1	1	1	1	1	1	1	1	1		6/26/2018	0	YES	State
18	1	1	1	1	1	1	1	1	1		6/26/2018	0	YES	State
19	1	1	1	1	1	1	1	1	1		6/26/2018	0	YES	State
20	1	1	1	1	1	1	1	1	1		6/26/2018	0	YES	State
21	1	1	1	1	1	1	1	1	1		6/26/2018	0	YES	State
22	1	1	1	1	1	1	1	1	1		6/26/2018	0	YES	State
23	1	1	1	1	1	1	1	1	1		6/26/2018	0	YES	State
24	1	1	1	1	1	1	1	1	1		6/26/2018	0	YES	State
25	1	1	1	1	1	1	1	1	1		6/26/2018	0	YES	State
26	1	1	1	0	0	1	1	1	1	13' from boc and 9 ft 10 inches apart	6/26/2018	2	NO	State
27	1	1	1	1	0	1	1	1	1	9' 10"	6/26/2018	1	NO	State
28	1	1	1	1	1	1	1	1	1		6/26/2018	0	YES	State
29	1	1	1	1	1	1	1	1	1		6/26/2018	0	YES	State
30	1	1	1	1	1	1	1	1	1		6/26/2018	0	YES	State
32	1	1	1	1	0	1	1	1	0	7ft between push buttons. Pointing more to the left of the intersection.	6/26/2018	2	NO	State
33	1	1	1	1	1	1	1	1	0	slightly angled off	6/26/2018	1	NO	State
34	1	1	1	1	0	1	1	1	1	7ft between push buttons. Pointing more towards the left of the intersection.	6/26/2018	1	NO	State
35	1	1	1	1	0	1	1	1	1	9.5 ft of separation	6/26/2018	1	NO	State
36	1	1	1	1	0	1	1	1	1	9.5 ft of separation	6/26/2018	1	NO	State
37	1	1	1	1	1	1	1	1	1		6/26/2018	0	YES	State
38	1	1	0	1	1	0	1	1	0	Arrow is pointing towards the right instead of straight across to the next pedestrian crosswalk. 39"	6/26/2018	3	NO	State
39	1	1	1	1	0	1	1	0	0		6/29/2018	3	NO	Local
40	1	1	1	1	1	1	1	0	0		6/29/2018	2	NO	Local
41	0	1	1	0	0	1	0	0	0		6/29/2018	6	NO	Local
42	1	1	1	1	0	1	0	0	0		6/29/2018	4	NO	Local
43	1	1	1	0	0	1	1	0	0		6/29/2018	4	NO	Local

East Grand Forks ADA Transition Plan - Accessible Pedestrian Signals

Updated 1/31/2019

Key: 0 = no, 1 = yes

OBJECTID	APS_ButtonPush button <=5' of outside edge of cross walk?	Push button face oriented parallel w/ crosswalk?	Is there a level landing 4" x 4" adj to push button?	Push button btwn 1.5' and 10' from back of curb?	Is there 10' of separation between push buttons?	Push button mounted between 42" and 48"?	Is a 4' PAR w/ 2% cross slope maintained?	Is there an audible walk indication?	Is there a vibrotactile arrow present and pointed in the correct direction?	Notes	last_edited_date	# of Non Compliant	Overall Compliant	Jurisdiction
44	1	1	1	1	0	1	1	0	0	sign and button on opposite side of signal pole	6/29/2018	3	NO	Local
45	1	1	1	1	0	1	1	0	0		6/29/2018	3	NO	Local
46	1	1	1	1	0	1	1	0	0		6/29/2018	3	NO	Local

TOTAL:	44
# Compliant:	24
% Compliant:	55%

OBJECTID	If walk/trail crosses curb, is there a curb ramp?	Is the Running slope 8.3% or less?	What is the running slope of the curb ramp?	Is the cross slope 2% or less?	What is the cross slope of the curb ramp?	Is the curb ramp width 48" or wider?	Is the Landing 48in sq or more with cross slope 2% or less any dir?	What is the max landing slope?	Is the curb ramp flares slopes 10% or less?	Detectible warnings extend the full width of the curb ramp?	Is approx 75% of truncated domes in good condition?	Do the truncated domes contrast with adjacent surfaces?	Are there no gaps in elevation or distance between concrete panels >1.5"?	What is the overall condition of the curb ramp?	Notes	EditDate	# of Non Compliant	Compliant	Jurisdiction
4	1	1	3.6	1	0.1	0	1	1.2	1	0	0	0	1	Fair	Water gate valve in landing of sidewalk.	6/26/2018	4	NO	Local
5	1	1	4.8	1	0	1	0	2.2	1	1	1	1	1	Fair		6/26/2018	1	NO	Local
6	1	1	1.8	1	1.3	1	0	2.2	1	0	0	0	1	Good		6/26/2018	4	NO	Local
7	1	1	7.0	1	.4	1	1	.9	1	0	0	0	1	Fair		6/26/2018	3	NO	Local
8	1	1	7.5	1	1.0	1	1	.9	1	0	0	0	1	Fair		6/26/2018	3	NO	Local
9	1	1	6.7	1	1.3	0	1	1.3	1	0	0	0	1	Fair	Vegetation growth in the cracks of the curb ramp.	6/26/2018	4	NO	Local
10	1	1	5.5	1	0.4	0	1	1.3	1	0	0	0	1	Fair	Vegetation growth in the cracks of the curb ramp.	6/26/2018	4	NO	Local
11	1	1	1.8	1	1.6	0	1	1.0	1	0	0	0	1	Poor	Vegetation growth in the cracks of the curb ramp.	6/26/2018	4	NO	Local
12	1	1	6.0	1	0.3	1	1	1.1	1	0	0	0	1	Poor	Vegetation growth in the cracks of the curb ramp.	6/26/2018	3	NO	Local
13	1	1	5.5	1	0.4	0	1	1.4	1	0	0	0	1	Fair		6/26/2018	4	NO	Local
14	1	1	4.8	1	1.0	0	1	1.6	1	0	0	0	0	Fair		6/26/2018	5	NO	Local
15	1	1	5.1	1	1.3	1	1	1.3	1	0	0	0	1	Fair		6/26/2018	3	NO	Local
16	1	1	.5	1	.2	1	1	.9	1	1	1	1	1	Good		6/26/2018	0	YES	State
17	1	1	0.9	1	0.5	1	1	0.9	1	1	1	1	1	Good		6/26/2018	0	YES	State
18	1	1	0.1	1	0.6	1	1	0.7	1	1	1	1	1	Good	Electric manhole and vault in the sidewalk.	6/26/2018	0	YES	State
19	1	1	.8	1	.1	1	1	.7	1	1	1	1	1	Good	electric box by ramp	6/26/2018	0	YES	State
20	1	1	0.7	1	0.7	1	1	1.2	1	1	1	1	0	Good	Manhole and electric vault in the sidewalk.	6/26/2018	1	NO	State
21	1	1	.8	1	.7	1	1	1.2	1	1	1	1	1	Good	manhole in landing	6/26/2018	0	YES	State
22	1	1	1.0	1	0.1	1	1	0.9	1	1	1	1	1	Good	Manhole and vault in the sidewalk.	6/26/2018	0	YES	State
23	1	1	.6	1	.3	1	0	.9	1	1	1	1	1	Good		6/26/2018	1	NO	State
24	1	1	3.3	1	.7	1	1	.7	1	0	0	0	1	Fair	utility in ramp area	6/26/2018	3	NO	Local
25	1	1	4.1	1	1.0	1	1	.7	0	0	0	0	1	Fair		6/26/2018	4	NO	Local
26	1	1	3.1	1	1.4	1	0	no landing	1	0	0	0	1	Fair	brick	6/26/2018	4	NO	Local
27	1	1	2.6	1	1.8	1	0	no landing	1	0	0	0	1	Fair	brick and leading to sidewalk connection is bad	6/26/2018	4	NO	Local
28	1	1	3.3	1	.6	1	0	2.7	1	0	0	0	1	Fair	little gap onto city hall prop	6/26/2018	4	NO	Local
29	1	1	3.6	1	.1	1	0	3.2	1	0	0	0	1	Fair		6/26/2018	4	NO	Local
30	1	1	2.2	1	.1	1	0	no landing	0	0	0	0	0	Poor	large gaps greater than 1.5 inches	6/26/2018	6	NO	Local
31	1	1	.3	1	1.0	1	0	no landing	1	0	0	0	1	Poor	its brick so very unlevel	6/26/2018	4	NO	Local
32	1	1	1.5	1	1.0	1	0	no landing	0	0	0	0	1	Fair		6/26/2018	5	NO	Local
33	1	1	3.5	1	.3	1	0	3.3	1	0	0	0	1	Fair		6/26/2018	4	NO	Local
34	0	0		0		0	0		0	0	0	0	0			6/26/2018	10	NO	Local
35	1	1	3.1	1	1.6	1	1	0.7	1	0	0	0	1	Fair		6/26/2018	3	NO	Local
36	1	1	3.2	1	1.4	1	1	1.7	1	0	0	0	1	Fair	brick	6/26/2018	3	NO	Local
37	0	0		0		0	0		0	0	0	0	0			6/26/2018	10	NO	Local
38	1	1	4.3	1	0.0	1	1	2.0	1	0	0	0	1	Fair	brick	6/26/2018	3	NO	Local
39	1	1	4.6	1	.5	1	1	1.0	1	1	1	1	1	Good		6/26/2018	0	YES	Local
41	1	1	2.9	1	3.8	0	1	1.8	1	0	0	0	1	Fair		6/26/2018	4	NO	Local
42	1	1	3.0	1	1.4	1	1	1.8	1	0	0	0	1	Fair	chunk of sidewalk missing	6/26/2018	3	NO	Local
43	1	1	1.1	1	1.1	1	1	1.4	1	0	0	0	1	Good		6/26/2018	3	NO	Local
44	0	1	0.4	1	0.5	0	1	0.5	0	0	0	0	1	Good	This is not a curb ramp it is a sidewalk	6/26/2018	6	NO	Local
45	0	0		0		0	0		0	0	0	0	0			6/28/2018	10	NO	Local
46	1	1	3.4	1	0.2	1	0	1.0	1	0	1	1	1	Good	Landing is not 48"x48"	6/28/2018	2	NO	Local
47	0	0		0		0	0		0	0	0	0	0			6/28/2018	10	NO	Local
48	1	1	.8	1	1.9	1	0	3.2	1	1	1	1	1	Good		6/28/2018	1	NO	Local
49	1	1	5.3	1	.5	1	1	1.6	1	1	1	1	1	Good		6/28/2018	0	YES	Local
50	0	0		0		0	0		0	0	0	0	0			6/28/2018	10	NO	Local
51	0	0		0		0	0		0	0	0	0	0			6/28/2018	10	NO	Local
52	1	0	8.4	1	2.0	1	1	2.0	0	1	1	1	1	Good		6/28/2018	2	NO	Local
53	1	1	3.7	1	0.2	1	1	1.0	1	0	1	1	1	Good		6/28/2018	1	NO	Local
54	1	1	3.2	1	0.7	1	1	1.5	1	0	1	1	1	Good		6/28/2018	1	NO	Local
55	1	1	2.6	1	.4	1	1	1.7	1	0	1	1	1	Good		6/28/2018	1	NO	Local
56	1	1	1.7	1	1.6	1	1	1.8	0	1	1	1	1	Good		6/28/2018	1	NO	Local
57	1	1	3.5	1	0.4	1	1	1.6	1	0	1	1	1	Good		6/28/2018	1	NO	Local
58	1	1	2.8	1	1.2	1	1	1.7	1	0	1	1	1	Good		6/28/2018	1	NO	Local
59	1	1	2.4	1	1.2	1	1	1.7	1	1	1	1	1	Good		6/28/2018	0	YES	Local
60	1	1	5.4	0	3.2	1	0	4.1	0	0	0	0	1	Fair	no det panels	6/28/2018	6	NO	Local
61	1	1	4.2	1	.2	1	0	.7	0	0	0	0	1	Fair	gap on roadway	6/28/2018	5	NO	Local
62	1	1	4.3	1	0.9	1	1	1.1	1	0	1	1	1	Good		6/28/2018	1	NO	Local
63	1	1	2.0	1	0.4	1	1	1.1	1	0	1	1	1	Good		6/28/2018	1	NO	Local
65	1	1	6.3	1	0.0	1	1	2.1	1	0	1	1	1	Good		6/28/2018	1	NO	Local
66	1	1	5.2	1	.3	1	1	1.5	1	1	1	1	1	Good		6/28/2018	0	YES	Local
67	1	1	2.1	1	.8	1	1	1.5	0	1	1	1	1	Good		6/28/2018	1	NO	Local

OBJECTID	If walk/trail crosses curb, is there a curb ramp?	Is the Running slope 8.3% or less?	What is the running slope of the curb ramp?	Is the cross slope 2% or less?	What is the cross slope of the curb ramp?	Is the curb ramp width 48" or wider?	Is the Landing 48in sq or more with cross slope 2% or less any dir?	What is the max landing slope?	Is the curb ramp flares slopes 10% or less?	Detectible warnings extend the full width of the curb ramp?	Is approx 75% of truncated domes in good condition?	Do the truncated domes contrast with adjacent surfaces?	Are there no gaps in elevation or distance between concrete panels >1.5"?	What is the overall condition of the curb ramp?	Notes	EditDate	# of Non Compliant	Compliant	Jurisdiction
68	1	1	3.1	1	0.8	1	1		1	0	1	1	1	Good	1.0	6/28/2018	1	NO	Local
69	1	1	2.8	1	1.0	1	1	1.0	1	0	1	1	1	Good		6/28/2018	1	NO	Local
70	1	1	4.5	1	1.6	1	1	2.0	0	1	1	1	1	Good		6/28/2018	1	NO	Local
71	1	1	4.6	1	.4	1	1	1.5	0	1	1	1	1	Good		6/28/2018	1	NO	Local
72	0	0		0		0	0		0	0	0	0	0			6/28/2018	10	NO	Local
73	0	0		0		0	0		0	0	0	0	0			6/28/2018	10	NO	Local
74	0	0		0		0	0		0	0	0	0	0			6/28/2018	10	NO	Local
75	0	0		0		0	0		0	0	0	0	0			6/28/2018	10	NO	Local
76	0	0		0		0	0		0	0	0	0	0			6/28/2018	10	NO	Local
77	0	0		0		0	0		0	0	0	0	0			6/28/2018	10	NO	Local
78	1	1	8.0	0	2.2	1	0	3.7	0	1	1	1	1	Good		6/28/2018	3	NO	Local
79	0	0		0		0	0		0	0	0	0	0			6/28/2018	10	NO	Local
80	1	1	4.9	1	1.9	1	1	.9	0	1	1	1	1	Good		6/28/2018	1	NO	Local
81	0	0		0		0	0		0	0	0	0	0			6/28/2018	10	NO	Local
82	0	0		0		0	0		0	0	0	0	0			6/28/2018	10	NO	Local
83	0	0		0		0	0		0	0	0	0	0			6/28/2018	10	NO	Local
84	0	0		0		0	0		0	0	0	0	0			6/28/2018	10	NO	Local
85	0	0		0		0	0		0	0	0	0	0			6/28/2018	10	NO	Local
86	1	1	5.4	1	.6	1	0	2.3	0	0	1	1	1	Good		6/28/2018	3	NO	Local
87	1	1	5.4	1	.7	1	1	.9	0	1	1	1	1	Good		6/28/2018	1	NO	Local
88	0	0		0		0	0		0	0	0	0	0			6/29/2018	10	NO	Local
89	1	1	2.4	1	.1	1	1	1.1	0	0	1	1	1	Good		6/29/2018	2	NO	Local
90	1	1	3.2	1	.2	1	1	1.7	0	0	1	1	1	Good		6/29/2018	2	NO	Local
91	1	1	5.4	1	.1	0	1	1.8	1	0	0	0	1	Fair		6/29/2018	4	NO	Local
92	1	1	2.6	1	.3	1	1	1.8	0	1	1	1	1	Good		6/29/2018	1	NO	Local
93	1	1	3.0	1	.4	1	1	.8	0	1	1	1	1	Good		6/29/2018	1	NO	Local
94	1	1	5.4	1	0.0	0	1	.8	1	0	0	0	1	Fair		6/29/2018	4	NO	Local
95	1	1	5.9	1	0.9	0	1	1.2	1	0	0	0	0	Fair	1.5" or greater gap	6/29/2018	5	NO	Local
96	1	1	5.4	1	0.0	1	1	1.2	1	0	0	0	0	Fair	1.5" or greater gap	6/29/2018	4	NO	Local
97	1	1	5.9	1	0.3	1	1	1.1	1	0	1	1	1	Good		6/29/2018	1	NO	Local
98	1	1	5.4	1	0.1	1	1	1.1	1	0	1	1	1	Good		6/29/2018	1	NO	Local
99	1	1	5.8	1	1.1	1	0	2.2	1	0	0	0	0	Fair	The curb ramp and sidewalk does not connect. Missing a panel.	6/28/2018	5	NO	Local
100	1	1	4.9	0	3.6	1	0	4.0	0	0	1	1	1	Good		6/28/2018	4	NO	Local
101	1	1	5.4	0	2.1	1	0	3.2	0	1	1	1	1	Good		6/28/2018	3	NO	Local
103	1	1	2.0	1	.5	1	1	2.0	1	1	1	1	1	Good		6/26/2018	0	YES	Local
104	1	1	3.4	1	1.4	1	1	0.3	1	0	0	0	0	Poor		6/26/2018	4	NO	Local
105	1	1	1.4	1	.3	1	0	no landing	1	1	1	1	1	Good		6/26/2018	1	NO	Local
106	0	0		0		0	0		0	0	0	0	0			6/28/2018	10	NO	Local
107	1	1	2.8	1	0.0	1	1	2.0	1	0	0	0	1	Fair		6/28/2018	3	NO	Local
108	0	0		0		0	0		0	0	0	0	0			6/28/2018	10	NO	Local
110	0	0		0		0	0		0	0	0	0	0			6/28/2018	10	NO	Local
111	0	0		0		0	0		0	0	0	0	0			6/28/2018	10	NO	Local
112	1	0		0		0	0		0	0	0	0	0			6/28/2018	9	NO	Local
113	1	1	7.6	1	0.1	1	1	1.5	1	0	0	0	1	Fair		6/28/2018	3	NO	Local
114	1	1	2.6	1	0.2	0	0	2.3	1	0	1	1	1	Good		6/28/2018	3	NO	Local
115	0	0		0		0	0		0	0	0	0	0			6/28/2018	10	NO	Local
116	1	1	2.5	1	0.1	1	1	0.8	1	0	1	1	1	Good		6/28/2018	1	NO	Local
117	1	0	15.6	1	.8	1	1	.6	1	0	0	0	1	Fair		6/28/2018	4	NO	Local
118	1	1	3.6	1	0.2	1	1	0.7	1	0	1	1	1	Good		6/28/2018	1	NO	Local
119	1	1	2.5	1	0.8	1	1	0.3	1	0	1	1	1	Good		6/28/2018	1	NO	Local
120	1	1	1.6	1	0.7	1	1	0.7	1	0	1	1	1	Good		6/28/2018	1	NO	Local
121	1	1	2.9	1	0.1	1	1	0.3	1	0	1	1	1	Good		6/28/2018	1	NO	Local
122	0	0		0		0	0		0	0	0	0	0			6/28/2018	10	NO	Local
123	0	0		0		0	0		0	0	0	0	0			6/28/2018	10	NO	Local
124	1	1	2.5	1	.5	1	1	1.8	1	1	1	1	1	Good		6/28/2018	0	YES	Local
125	1	1	2.8	1	.5	1	1	1.8	1	0	1	1	1	Good		6/26/2018	1	NO	Local
126	1	1	4.5	1	1.5	1	1	1.5	0	1	1	1	1	Good		6/28/2018	1	NO	Local
127	0	0		0		0	0		0	0	0	0	0			6/28/2018	10	NO	Local
128	1	1	1.7	1	0.1	1	1		1	0	1	1	1	Good		6/28/2018	1	NO	Local
129	1	1	2.4	1	0.1	1	0	0.7	1	0	1	1	1	Good		6/28/2018	2	NO	Local
130	1	1	2.0	1	0.2	1	1	0.7	1	0	1	1	1	Good		6/28/2018	1	NO	Local

OBJECTID	If walk/trail crosses curb, is there a curb ramp?	Is the Running slope 8.3% or less?	What is the running slope of the curb ramp?	Is the cross slope 2% or less?	What is the cross slope of the curb ramp?	Is the curb ramp width 48" or wider?	Is the Landing 48in sq or more with cross slope 2% or less any dir?	What is the max landing slope?	Is the curb ramp flares slopes 10% or less?	Detectible warnings extend the full width of the curb ramp?	Is approx 75% of truncated domes in good condition?	Do the truncated domes contrast with adjacent surfaces?	Are there no gaps in elevation or distance between concrete panels >1.5"?	What is the overall condition of the curb ramp?	Notes	EditDate	# of Non Compliant	Compliant	Jurisdiction
131	1	1	1.9	1	0.5	1	0	2.1	1	1	1	1	1	Good		6/26/2018	1	NO	Local
132	0	0		0		0	0		0	0	0	0	0			6/26/2018	10	NO	Local
133	1	1	6.1	1	.3	1	1	1.9	0	0	0	0	1	Fair		6/26/2018	4	NO	Local
134	1	1	5.6	1	0.5	1	0	2.4	1	0	0	0	1			6/26/2018	4	NO	Local
135	1	1	2.3	1	.1	1	1	.9	1	1	1	1	1	Good		6/26/2018	0	YES	Local
136	1	1	.7	1	.7	1	1	.9	1	1	1	1	1		very sandy	6/26/2018	0	YES	State
137	1	1	.4	1	.8	1	1	.8	1	1	1	1	1	Good		6/26/2018	0	YES	State
140	1	1	5.0	1	.4	1	1	.8	0	1	1	1	1	Good		6/26/2018	1	NO	Local
141	1	1	4.4	1	.1	1	1	.6	0	1	1	1	1	Good		6/26/2018	1	NO	Local
142	1	1	3.5	1	.4	1	1	.6	1	1	1	1	1	Good		6/26/2018	0	YES	State
143	1	1	1.0	1	.6	1	1	.8	1	1	1	1	1	Good		6/26/2018	0	YES	State
144	1	1	2.0	1	.3	1	1	.8	1	1	1	1	1	Good		6/26/2018	0	YES	Local
145	0	0		0		0	0		0	0	0	0	0			6/26/2018	10	NO	Local
146	0	0		0		0	0		0	0	0	0	0			6/26/2018	10	NO	Local
147	1	1	6.7	1	.9	1	1	1.3	0	1	1	1	1	Good		6/28/2018	1	NO	Local
148	1	1	5.9	1	0.2	1	1	1.0	1	1	1	1	1	Good		6/28/2018	0	YES	Local
149	1	1	4.4	1	.7	1	1	1.0	0	1	1	1	1	Good		6/28/2018	1	NO	Local
151	1	0	10.1	1	.3	0	0	2.1	0	0	0	0	1	Fair		6/28/2018	7	NO	Local
152	1	0	12	1	.8	1	1	.3	0	0	0	0	1	Fair		6/28/2018	5	NO	Local
153	1	1	8.1	1	0.3	1	1	0.3	1	0	0	0	1	Fair		6/28/2018	3	NO	Local
154	1	0	16.8	1	.3	1	0	4.5	1	0	0	0	1	Fair		6/28/2018	5	NO	Local
155	1	0	10.1	0	2.4	1	0	2.7	1	0	0	0	1	Fair		6/28/2018	6	NO	Local
156	0	0		0		0	0		0	0	0	0	0			6/28/2018	10	NO	Local
158	1	1	7.9	0	2.8	0	0	2.5	1	0	0	0	1	Fair		6/28/2018	6	NO	Local
159	1	1	6.9	1	.5	1	0	2.5	0	1	1	1	1	Good		6/28/2018	2	NO	Local
160	1	1	4.7	1	1.6	1	1	1.1	0	1	1	1	1	Good		6/28/2018	1	NO	Local
161	1	1	6.1	1	.6	1	1	1.1	0	1	1	1	1	Good		6/28/2018	1	NO	Local
162	1	1	2.0	1	.7	1	1	.7	0	0	0	0	1	Fair		6/28/2018	4	NO	Local
163	1	1	4.2	1	.9	1	1	.7	0	0	0	0	1	Fair		6/28/2018	4	NO	Local
164	1	0	8.8	1	.8	0	1	1.3	0	0	0	0	1	Fair		6/28/2018	6	NO	Local
165	1	0	10.8	1	1.6	0	1	1.3	0	0	0	0	1	Fair		6/28/2018	6	NO	Local
166	1	1	6.3	1	1.1	1	1	.6	0	1	1	1	1	Good		6/28/2018	1	NO	Local
167	1	1	5.4	1	2.0	1	1	.6	0	1	1	1	1	Good		6/28/2018	1	NO	Local
168	1	1	4.5	0	2.1	1	1	1.8	0	1	1	1	1	Good		6/28/2018	2	NO	Local
169	1	1	4.6	1	1.8	1	1	1.8	0	1	1	1	1	Good		6/28/2018	1	NO	Local
170	1	1	4.1	0	3.9	1	1	1.2	0	1	1	1	1	Good		6/28/2018	2	NO	Local
171	1	1	3.0	1	.3	1	1	1.2	0	1	1	1	1	Good		6/28/2018	1	NO	Local
172	1	1	7.1	1	.5	1	1	1.0	0	1	1	1	1	Good		6/28/2018	1	NO	Local
173	1	1	6.4	1	.2	1	1	1.5	0	1	1	1	1	Good		6/28/2018	1	NO	Local
174	1	1	4.3	1	.9	1	1	1.5	0	1	1	1	1	Good		6/28/2018	1	NO	Local
176	1	1	4.6	1	0.2	1	1	1.9	1	0	1	1	1	Good		6/28/2018	1	NO	Local
177	1	1	5.1	1	.3	1	1	.6	1	1	1	1	1	Good		6/28/2018	0	YES	Local
178	1	1	3.0	1	.1	1	1	.6	0	1	1	1	1	Good		6/28/2018	1	NO	Local
180	1	1	1.1	1	.5	1	1	1.9	0	1	1	1	1	Good		6/26/2018	1	NO	Local
181	1	0	12.1	1	3.0	1	0	1.3	1	0	0	0	0	Fair		6/26/2018	6	NO	State
182	1	1	3.2	1	1.1	1	1	1.5	1	0	1	1	1	Good		6/26/2018	1	NO	State
183	1	1	4.1	1	3.2	1	0	2.5	1	1	1	1	1	Good		6/26/2018	1	NO	Local
185	1	1	3.2	1	2.3	1	0	3.4	1	0	0	0	0	Fair		6/26/2018	5	NO	Local
187	1	1	2.3	1	0.6	1	1	0.6	1	0	0	0	1	Fair		6/28/2018	3	NO	Local
188	1	1	2.0	1	0.4	1	1	0.6	1	0	0	0	0	Fair		6/28/2018	4	NO	Local
189	1	1	2.1	1	1.9	1	1	1.8	0	0	0	0	1	Fair		6/26/2018	4	NO	Local
190	1	1	2.9	1	0.0	1	1	1.8	0	0	0	0	1	Fair		6/26/2018	4	NO	Local
192	1	0	3.5	1	.2	1	1	1.6	0	0	0	0	1	Fair		6/28/2018	5	NO	Local
193	1	1	5.3	1	.5	1	1	1.6	0	0	0	0	1	Fair		6/28/2018	4	NO	Local
195	1	1	5.2	1	1.4	1	1	1.1	0	0	0	0	1	Fair		6/28/2018	4	NO	Local
196	1	1	5.7	1	0.8	1	1		1	0	0	0	1	Fair		6/28/2018	3	NO	Local
197	0	0		0		0	0		0	0	0	0	0			6/28/2018	10	NO	Local
198	1	1	3.5	1	0.5	1	1	1.2	1	0	0	0	0	Fair		6/28/2018	4	NO	Local
199	1	1	4.0	1	0.6	1	1	0.4	1	0	0	0	1	Fair		6/28/2018	3	NO	Local
200	1	1	3.8	1	0.6	1	1	0.4	1	0	0	0	1			6/28/2018	3	NO	Local
201	0	0		0		0	0		0	0	0	0	0			6/28/2018	10	NO	Local
202	1	1	4.9	1	0.4	1	0	2.1	1	0	0	0	1	Fair		6/28/2018	4	NO	Local

OBJECTID	If walk/trail crosses curb, is there a curb ramp?	Is the Running slope 8.3% or less?	What is the running slope of the curb ramp?	Is the cross slope 2% or less?	What is the cross slope of the curb ramp?	Is the curb ramp width 48" or wider?	Is the Landing 48in sq or more with cross slope 2% or less any dir?	What is the max landing slope?	Is the curb ramp flares slopes 10% or less?	Detectible warnings extend the full width of the curb ramp?	Is approx 75% of truncated domes in good condition?	Do the truncated domes contrast with adjacent surfaces?	Are there no gaps in elevation or distance between concrete panels >1.5"?	What is the overall condition of the curb ramp?	Notes	EditDate	# of Non Compliant	Compliant	Jurisdiction
203	1	1	4.5	1	0.3	1	1	1.7	1	0	0	0	1	Fair		6/28/2018	3	NO	Local
204	1	1	7.3	0	3.4	1	1	1.7	1	0	0	0	1			6/28/2018	4	NO	Local
205	1	1	6.9	1	.8	1	1	1.1	1	1	1	1	1	Good		6/28/2018	0	YES	Local
206	1	0	8.4	1	1.9	0	1	1.1	0	1	1	1	1	Good		6/28/2018	3	NO	Local
207	1	1	4.2	1	0.8	1	0	0.1	1	0	1	1	1	Good		6/28/2018	2	NO	Local
208	1	1	4.7	1	0.3	1	1	0.1	1	1	1	1	1	Good		6/28/2018	0	YES	Local
209	1	1	5.0	1	1.7	1	1	1.4	1	0	0	0	0	Fair		6/28/2018	4	NO	Local
210	1	1	4.4	1	.9	1	0	1.6	0	0	0	0	1	Fair	utility box is landing	6/28/2018	5	NO	Local
211	1	1	2.9	1	.8	1	1	1.6	0	0	0	0	1	Fair	utility box as landing	6/28/2018	4	NO	Local
212	1	1	2.2	1	0.3	1	0	2.5	1	0	1	1	1	Good	Electric Vault	6/28/2018	2	NO	Local
213	1	1	4.7	1	.3	1	0	2.5	1	1	1	1	1	Good	vault in landing	6/28/2018	1	NO	Local
215	1	1	5.1	1	0.8	1	1	1.4	1	0	0	0	1	Fair		6/28/2018	3	NO	Local
216	1	1	3.6	1	1.4	1	1	2.0	0	1	1	1	1	Fair		6/28/2018	1	NO	Local
217	1	1	3.9	1	.3	1	1	2.0	0	0	0	0	1	Fair		6/28/2018	4	NO	Local
218	1	1	3.9	0	2.3	1	0	2.1	0	0	1	1	1	Good		6/28/2018	4	NO	Local
220	1	0	6.2	1	1.0	1	0	1.4	1	0	0	0	1	Fair		6/28/2018	5	NO	Local
221	1	1	6.5	1	2.4	1	0	1.4	1	0	0	0	1	Fair		6/28/2018	4	NO	Local
222	1	1	4.6	1	.6	1	1	.8	0	0	0	0	1	Fair		6/28/2018	4	NO	Local
223	1	1	3.5	1	0.6	1	1	0.8	1	0	0	0	1			6/28/2018	3	NO	Local
224	1	1	2.1	1	.6	1	1	1.4	0	0	0	0	1	Fair		6/28/2018	4	NO	Local
225	1	1	3.7	1	.6	1	1	1.4	0	0	0	0	1	Fair		6/28/2018	4	NO	Local
226	1	1	6.4	0	5.0	1	1	1.7	0	1	1	1	0	Fair	lip by curb line and by landing	6/28/2018	3	NO	Local
227	1	1	3.5	1	.2	1	1	1.4	0	1	1	1	1	Good		6/28/2018	1	NO	Local
228	1	1	7.0	1	0.6	1	1	1.4	1	0	1	1	1	Good		6/28/2018	1	NO	Local
229	1	1	6.0	1	0.0	1	0	2.2	0	0	0	0	1	Fair	utility box in landing	6/29/2018	5	NO	Local
230	1	1	5.5	1	0.2	1	1	0.6	1	0	1	1	0	Good	1.5" gap or greater at the back of curb and curb ramp	6/28/2018	2	NO	Local
232	1	1	3.5	1	.5	1	1	.3	0	1	1	1	1	Good	1 inch lip by curb	6/28/2018	1	NO	Local
233	1	1	4.9	1	.6	1	0	.3	0	1	1	1	1	Good		6/28/2018	2	NO	Local
234	1	1	2.8	1	.7	1	1	1.4	0	1	1	1	1	Good		6/29/2018	1	NO	Local
235	1	1	4.0	1	.3	1	1	1.4	0	1	1	1	1	Good		6/29/2018	1	NO	Local
236	1	1	3.0	1	.1	1	1	1.7	0	1	1	1	1	Good		6/29/2018	1	NO	Local
237	1	1	3.0	1	1.1	1	1	1.7	0	1	1	1	1	Good		6/29/2018	1	NO	Local
238	1	1	3.4	1	.3	1	1	.3	0	1	1	1	1	Good		6/28/2018	1	NO	Local
239	1	1	6.3	1	1.0	1	1	0.3	1	1	1	1	1	Good		6/28/2018	0	YES	Local
240	1	1	6.7	1	0.7	1	1	1.8	1	1	1	1	1	Good		6/28/2018	0	YES	Local
241	1	1	3.0	1	.5	1	1	1.8	0	1	1	1	1	Good		6/28/2018	1	NO	Local
242	0	0		0		0	0		0	0	0	0	0			6/29/2018	10	NO	Local
243	1	1	6.8	1	1.7	1	1	1.6	0	1	1	1	1	Good		6/29/2018	1	NO	Local
244	1	1	3.6	1	1.2	1	1	0.2	1	1	1	1	1	Good		6/29/2018	0	YES	Local
245	1	1	3.5	1	.8	1	1	.2	0	1	1	1	1	Good		6/29/2018	1	NO	Local
246	1	1	5.7	1	1.2	1	1	1.4	1	0	1	1	1	Good		6/28/2018	1	NO	Local
247	1	1	4.6	1	0.9	1	1	1.4	1	0	1	1	1	Good		6/28/2018	1	NO	Local
248	1	1	3.0	1	1.0	1	0	4.4	1	0	1	1	1	Good		6/28/2018	2	NO	Local
249	0	0		0		0	0		0	0	0	0	0			6/28/2018	10	NO	Local
250	1	1	2.9	1	.5	1	1	1.4	0	1	1	1	1	Good		6/29/2018	1	NO	Local
251	1	1	3.4	1	.4	1	1	1.4	0	1	1	1	1	Good		6/29/2018	1	NO	Local
252	1	0	9.4	1	1.5	1	1	0.6	1	0	1	1	1	Good		6/28/2018	2	NO	Local
253	1	1	5.1	0	2.6	1	1	.6	0	0	1	1	1	Good		6/28/2018	3	NO	Local
254	1	1	4.2	1	0.3	1	1	0.6	1	0	1	1	1	Good		6/29/2018	1	NO	Local
255	1	1	4.1	1	0.3	1	1	0.6	1	0	1	1	1	Good		6/29/2018	1	NO	Local
256	1	1	4.3	1	1.2	1	1	1.5	0	1	1	1	1	Good		6/29/2018	1	NO	Local
257	1	1	4.9	1	2.0	1	1	1.5	1	1	1	1	0			6/29/2018	1	NO	Local
258	1	1	3.6	1	.7	1	1	1.1	0	1	1	1	1	Good		6/28/2018	1	NO	Local
259	1	1	3.2	1	1.4	1	1	1.1	0	1	1	1	1	Good		6/28/2018	1	NO	Local
260	1	1	3.6	1	.3	1	1	.5	0	0	1	1	1	Good		6/29/2018	2	NO	Local
261	1	1	5.0	1	1.6	1	1	.5	0	0	1	1	1	Good		6/29/2018	2	NO	Local
262	1	1	4.7	1	.9	1	1	.8	1	1	1	1	1	Good		6/29/2018	0	YES	Local
263	1	1	5.6	1	.9	1	1	.1	0	1	1	1	1	Good	gap by landing	6/28/2018	1	NO	Local
264	1	1	5.4	1	1.6	1	1	.8	0	0	1	1	1	Fair		6/29/2018	2	NO	Local
265	1	1	2.1	1	.8	1	0	2.8	0	0	0	0	1	Fair		6/29/2018	5	NO	Local
266	0	0		0		0	0		0	0	0	0	0			6/29/2018	10	NO	Local
267	0	0		0		0	0		0	0	0	0	0			6/29/2018	10	NO	Local

OBJECTID	If walk/trail crosses curb, is there a curb ramp?	Is the Running slope 8.3% or less?	What is the running slope of the curb ramp?	Is the cross slope 2% or less?	What is the cross slope of the curb ramp?	Is the curb ramp width 48" or wider?	Is the Landing 48in sq or more with cross slope 2% or less any dir?	What is the max landing slope?	Is the curb ramp flares slopes 10% or less?	Detectible warnings extend the full width of the curb ramp?	Is approx 75% of truncated domes in good condition?	Do the truncated domes contrast with adjacent surfaces?	Are there no gaps in elevation or distance between concrete panels >1.5"?	What is the overall condition of the curb ramp?	Notes	EditDate	# of Non Compliant	Compliant	Jurisdiction
268	0	0		0		0	0		0	0	0	0	0			6/29/2018	10	NO	Local
269	0	0		0		0	0		0	0	0	0	0			6/29/2018	10	NO	Local
270	0	0		0		0	0		0	0	0	0	0			6/29/2018	10	NO	Local
271	0	0		0		0	0		0	0	0	0	0			6/29/2018	10	NO	Local
272	0	0		0		0	0		0	0	0	0	0			6/29/2018	10	NO	Local
273	0	0		0		0	0		0	0	0	0	0			6/29/2018	10	NO	Local
274	0	0		0		0	0		0	0	0	0	0			6/29/2018	10	NO	Local
275	1	1	6.2	1	0.7	1	1	2.2	1	0	0	0	1	Fair	Vegetation growth along the back of curb.	6/29/2018	3	NO	Local
276	1	1	4.1	1	0.6	1	1	1.5	1	0	1	1	1	Good		6/29/2018	1	NO	Local
277	0	0		0		0	0		0	0	0	0	0			6/29/2018	10	NO	Local
278	0	0		0		0	0		0	0	0	0	0			6/29/2018	10	NO	Local
279	0	0		0		0	0		0	0	0	0	0		1.5" or greater gap	6/29/2018	10	NO	Local
280	1	1	5.4	1	2.0	1	1	1.5	1	0	1	1	1	Good		6/29/2018	1	NO	Local
281	0	0		0		0	0		0	0	0	0	0			6/28/2018	10	NO	Local
282	0	0		0		0	0		0	0	0	0	0			6/28/2018	10	NO	Local
283	0	0		0		0	0		0	0	0	0	0			6/28/2018	10	NO	Local
284	0	0		0		0	0		0	0	0	0	0			6/28/2018	10	NO	Local
285	0	0		0		0	0		0	0	0	0	0			6/28/2018	10	NO	Local
286	0	0		0		0	0		0	0	0	0	0			6/28/2018	10	NO	Local
287	0	0		0		0	0		0	0	0	0	0			6/28/2018	10	NO	Local
288	0	0		0		0	0		0	0	0	0	0			6/28/2018	10	NO	Local
289	0	0		0		0	0		0	0	0	0	0			6/28/2018	10	NO	Local
290	0	0		0		0	0		0	0	0	0	0			6/28/2018	10	NO	Local
291	0	0		0		0	0		0	0	0	0	0			6/28/2018	10	NO	Local
292	0	0		0		0	0		0	0	0	0	0			6/28/2018	10	NO	Local
293	0	0		0		0	0		0	0	0	0	0			6/28/2018	10	NO	Local
294	0	0		0		0	0		0	0	0	0	0			6/28/2018	10	NO	Local
295	0	0		0		0	0		0	0	0	0	0			6/28/2018	10	NO	Local
296	0	0		0		0	0		0	0	0	0	0			6/28/2018	10	NO	Local
298	0	0		0		0	0		0	0	0	0	0			6/26/2018	10	NO	Local
299	1	1	5.0	1	.3	1	0	3.3	0	0	1	1	1	Good		6/26/2018	3	NO	Local
300	1	0	11.9	1	.2	1	0	3.9	0	0	0	0	1	Fair	crack	6/26/2018	6	NO	Local
301	1	0	8.1	0	4.3	1	1	1.0	0	0	0	0	1	Fair		6/26/2018	6	NO	Local
302	1	1	7.8	1	.8	1	0	3.0	0	1	1	1	1	Good		6/26/2018	2	NO	Local
303	1	1	7.3	0	3.0	1	0	4.1	0	1	1	1	1	Good		6/26/2018	3	NO	Local
305	1	1	3.4	1	.3	1	1	1.8	0	0	0	0	1	Fair		6/29/2018	4	NO	Local
306	1	1	3.3	1	1.4	1	1	.5	0	1	1	1	1	Good		6/29/2018	1	NO	Local
307	1	1	1.6	1	.2	1	1	.8	1	1	1	1	1	Good		6/29/2018	0	YES	Local
308	1	1	1.7	1	.8	1	1	1.1	0	0	1	1	1	Good		6/29/2018	2	NO	Local
309	1	1	.9	1	.9	1	1	1.1	0	0	1	1	1	Good		6/29/2018	2	NO	Local
310	1	1	2.9	0	2.6	1	1	1.2	0	1	1	1	1	Good		6/29/2018	2	NO	Local
311	1	1	3.0	1	1.4	1	1	.7	0	1	1	1	1	Good		6/29/2018	1	NO	Local
312	0	0		0		0	0		0	0	0	0	0			6/29/2018	10	NO	Local
313	0	0		0		0	0		0	0	0	0	0			6/26/2018	10	NO	State
314	0	0		0		0	0		0	0	0	0	0			6/26/2018	10	NO	State
315	1	1	3.6	1	.8	1	1	.5	1	1	1	1	1	Good		6/26/2018	0	YES	State
316	1	1	0.7	1	0.3	1	1	2.0	1	1	1	1	1	Good		6/26/2018	0	YES	State
317	1	1	2.7	1	1.1	1	1	1.4	1	1	1	1	1	Good		6/26/2018	0	YES	State
318	1	1	0.8	1	0.1	1	1	0.7	1	0	0	0	1	Good		6/26/2018	3	NO	State
319	1	1	.2	1	.3	1	1	1.2	1	0	1	1	1	Good	brick as sidewalk	6/26/2018	1	NO	State
320	1	1	0.3	1	0.3	1	1	0.7	1	0	1	1	1	Good		6/26/2018	1	NO	State
321	1	1	0.1	1	0.4	1	1	1.3	1	0	0	0	1	Good		6/26/2018	3	NO	State
322	1	1	3.4	1	0.2	1	1	0.8	1	1	1	1	1	Good		6/26/2018	0	YES	State
323	1	1	3.8	1	0.2	1	1	1.1	1	1	1	1	1	Good		6/26/2018	0	YES	State
324	1	1	2.2	1	3.3	1	1	1.6	0	0	0	0	1	Fair	all brick	6/26/2018	4	NO	Local
325	1	1	4.3	1	1.9	1	1	.5	0	0	0	0	1	Fair	all brick	6/26/2018	4	NO	Local
326	1	1	5.2	1	.2	1	1	1.3	1	1	1	1	1	Good		6/26/2018	0	YES	State
327	1	1	8.3	1	0.2	1	1	1.8	1	1	1	1	1	Good		6/26/2018	0	YES	State
329	1	1	4.7	1	1.1	1	1	.2	1	0	0	0	1	Fair		6/26/2018	3	NO	Local
330	1	1	4.6	1	.3	1	1	1.2	0	0	0	0	1	Fair		6/26/2018	4	NO	Local
331	1	1	5.3	1	.2	1	1	.9	1	1	1	1	1	Good		6/26/2018	0	YES	Local
332	1	1	5.5	1	0.0	1	0	4.6	1	0	0	0	1	Fair		6/26/2018	4	NO	Local

OBJECTID	If walk/trail crosses curb, is there a curb ramp?	Is the Running slope 8.3% or less?	What is the running slope of the curb ramp?	Is the cross slope 2% or less?	What is the cross slope of the curb ramp?	Is the curb ramp width 48" or wider?	Is the Landing 48in sq or more with cross slope 2% or less any dir?	What is the max landing slope?	Is the curb ramp flares slopes 10% or less?	Detectible warnings extend the full width of the curb ramp?	Is approx 75% of truncated domes in good condition?	Do the truncated domes contrast with adjacent surfaces?	Are there no gaps in elevation or distance between concrete panels >1.5"?	What is the overall condition of the curb ramp?	Notes	EditDate	# of Non Compliant	Compliant	Jurisdiction
333	1	1	1.9	1	.4	1	1	1.3	1	1	1	1	1	Good	water valve in landing	6/26/2018	0	YES	Local
334	1	1	3.7	1	.8	1	0	3.6	0	0	0	0	1	Fair		6/26/2018	5	NO	Local
335	1	1	2.5	1	.5	1	0	3.9	1	0	0	0	1	Fair		6/26/2018	4	NO	Local
336	1	1	2.7	1	1.8	1	1	1.7	1	0	0	0	1	Fair	brick	6/26/2018	3	NO	Local
337	1	1	2.0	1	.5	1	1	1.3	1	0	0	0	1	Fair		6/26/2018	3	NO	Local
338	1	1	4.0	1	0.2	0	1	1.6	1	0	0	0	1			6/26/2018	4	NO	Local
339	1	1	5.7	1	1.6	1	1	.4	1	0	0	0	1	Fair	no detect panels	6/25/2018	3	NO	Local
340	1	1	2.9%	1	.3	1	0	2.1%	1	1	1	1	1	Good		6/25/2018	1	NO	Local
341	1	1	5.0	1	.8	1	1	.5	0	0	0	0	1	Fair	no detect panels	6/25/2018	4	NO	Local
342	0	0		0		0	0		0	0	0	0	0			6/25/2018	10	NO	Local
343	1	1	1.4	1	0.7	1	0		0	1	1	1	0			6/25/2018	3	NO	State
344	1	1	.7%	1	.7%	1	0	no landing	0	1	1	1	1	Good	proposed sidewalk no landing	6/25/2018	2	NO	State
345	1	0	8.7%	1	2.0%	1	1	1.4%	0	0	0	0	1	Fair	no detectible warning panels	6/25/2018	5	NO	Local
348	1	1	3.6%	1	.8%	1	0	2.1%	0	1	1	1	1	Fair		6/25/2018	2	NO	Local
349	1	1	4.0	0	2.2	1	1	.9	0	1	1	1	1	Good		6/28/2018	2	NO	Local
350	1	1	4.8	1	.8	1	0	3.1	0	1	1	1	1	Good		6/28/2018	2	NO	Local
351	0	0		0		0	0		0	0	0	0	0			6/28/2018	10	NO	Local
352	1	1	2.6	1	.3	1	1	.7	0	1	1	1	1	Good	slight lip by landing	6/29/2018	1	NO	Local
353	0	0		0		0	0		0	0	0	0	0			6/29/2018	10	NO	Local
354	0	0		0		0	0		0	0	0	0	0			6/28/2018	10	NO	Local
355	0	0		0		0	0		0	0	0	0	0			6/28/2018	10	NO	Local
356	1	1	3.5	1	0.1	1	1	1.2	1	0	0	0	1	Fair		6/28/2018	3	NO	Local
357	0	0		0		0	0		0	0	0	0	0			6/28/2018	10	NO	Local
358	1	1	3.7	1	1.8	1	1	0.6	1	0	1	1	1	Good		6/29/2018	1	NO	Local
359	1	1	2.7	1	0.0	1	1	1.0	1	1	1	1	1	Good		6/29/2018	0	YES	Local
360	1	1	1.7	1	1.5	1	1	0.9	1	0	1	1	1	Good		6/29/2018	1	NO	Local
361	1	1	1.8	1	0.8	1	1	0.9	1	0	1	1	1	Good		6/29/2018	1	NO	Local
362	1	1	0.6	1	0.7	1	1	0.8	1	0	1	1	1	Good		6/29/2018	1	NO	Local
363	1	1	0.9	1	1.8	1	0	4.2	1	0	1	1	1	Good	Landing heaved up. Looks to be caused by heat.	6/29/2018	2	NO	Local
364	1	1	1.4	1	0.2	1	1	1.6	1	0	1	1	1	Good		6/29/2018	1	NO	Local
365	1	1	2.8	1	1.1	1	0	2.8	1	0	1	1	1	Good		6/29/2018	2	NO	Local
366	1	1	3.6	1	1.1	1	0	2.5	1	0	1	1	1	Good		6/29/2018	2	NO	Local
367	1	1	3.4	1	.7	1	1	2.1	0	0	1	1	1	Good		6/29/2018	2	NO	Local
368	1	1	2.3	1	1.4	1	1	.6	0	1	1	1	1	Good		6/29/2018	1	NO	Local
369	0	0		0		0	0		0	0	0	0	0			6/29/2018	10	NO	Local
370	1	1	3.7	1	0.9	1	1	1.8	1	0	1	1	1	Good		6/29/2018	1	NO	Local
371	1	1	3.2	1	0.3	1	1	1.8	1	0	1	1	1	Good		6/29/2018	1	NO	Local
373	1	1	3.3	1	0.1	1	1	0.5	1	0	1	1	1	Good		6/29/2018	1	NO	Local
374	0	0		0		0	0		0	0	0	0	0			6/29/2018	10	NO	Local
375	0	0		0		0	0		0	0	0	0	0			6/29/2018	10	NO	Local
376	1	1	1.3	1	0.0	1	1	0.6	1	0	1	1	1	Good		6/29/2018	1	NO	Local
377	1	1	2.7	1	0.8	1	1	1.6	1	1	1	1	1	Good		6/29/2018	0	YES	Local
378	1	1	5.1	1	0.6	1	1	1.6	1	1	1	1	1	Good		6/29/2018	0	YES	Local
379	1	1	2.9	1	.7	1	1	1.8	0	1	1	1	1	Good		6/29/2018	1	NO	Local
380	0	0		0		0	0		0	0	0	0	0			6/29/2018	10	NO	Local
381	1	1	3.0	1	0.7	1	1	2.0	1	1	1	1	1	Good		6/29/2018	0	YES	Local
382	1	1	2.7	1	0.1	1	1	2.0	1	1	1	1	1	Good		6/29/2018	0	YES	Local
383	1	1	3.1	1	.1	1	1	1.8	0	1	1	1	1	Good		6/29/2018	1	NO	Local
384	1	1	2.9	1	.4	1	1	1.8	0	1	1	1	1	Good		6/29/2018	1	NO	Local
385	1	1	2.0	1	1.2	0	1	1.0	1	0	0	0	1	Fair		6/29/2018	4	NO	Local
386	1	1	3.9	1	.1	0	1	1.0	1	0	0	0	1	Fair		6/29/2018	4	NO	Local
387	1	1	3.3	1	1.4	1	1	1.5	0	0	1	1	1	Good		6/29/2018	2	NO	Local
389	0	0		0		0	0		0	0	0	0	0			6/29/2018	10	NO	Local
390	1	1	1.2	1	.4	1	1	1.5	0	0	0	0	1	Fair		6/29/2018	4	NO	Local
391	1	1	1.3	1	.3	1	1	1.5	0	0	1	1	1	Good		6/29/2018	2	NO	Local
392	1	1	1.5	1	.2	1	1	1.7	0	1	1	1	1	Good		6/29/2018	1	NO	Local
393	1	1	7.4	1	.5	1	1	1.7	1	0	0	0	1	Fair		6/29/2018	3	NO	Local
394	1	1	3.2	1	0.1	1	1	1.6	1	1	1	1	1	Good		6/29/2018	0	YES	Local
395	1	1	3.8	1	.8	1	1	1.5	0	0	0	0	1	Fair		6/29/2018	4	NO	Local
396	1	1	3.0	1	.3	1	1	1.5	0	1	1	1	1	Good		6/29/2018	1	NO	Local
397	1	1	4.3	1	.2	1	1	1.3	1	1	1	1	1	Good		6/29/2018	0	YES	Local
398	1	1	6.1	1	1.0	1	0	2.3	0	0	0	0	1	Fair		6/29/2018	5	NO	Local

OBJECTID	If walk/trail crosses curb, is there a curb ramp?	Is the Running slope 8.3% or less?	What is the running slope of the curb ramp?	Is the cross slope 2% or less?	What is the cross slope of the curb ramp?	Is the curb ramp width 48" or wider?	Is the Landing 48in sq or more with cross slope 2% or less any dir?	What is the max landing slope?	Is the curb ramp flares slopes 10% or less?	Detectible warnings extend the full width of the curb ramp?	Is approx 75% of truncated domes in good condition?	Do the truncated domes contrast with adjacent surfaces?	Are there no gaps in elevation or distance between concrete panels >1.5"?	What is the overall condition of the curb ramp?	Notes	EditDate	# of Non Compliant	Compliant	Jurisdiction
399	1	1	3.3	1	0.5	1	1	0.7	1	0	0	0	0	Fair	1.5" or greater gap near the landing	6/29/2018	4	NO	Local
400	0	0		0		0	0		0	0	0	0	0			6/29/2018	10	NO	Local
401	0	0		0		0	0		0	0	0	0	0			6/29/2018	10	NO	Local
402	1	1	6.4	1	0.3	0	1	1.7	1	0	0	0	1	Fair		6/29/2018	4	NO	Local
403	0	0		0		0	0		0	0	0	0	0			6/29/2018	10	NO	Local
404	1	1	4.2	1	0.6	1	1	1.4	1	1	1	1	1	Good		6/29/2018	0	YES	Local
405	1	1	2.5	1	.8	1	1	1.1	1	1	1	1	1	Good		6/29/2018	0	YES	Local
406	1	1	2.2	1	0.5	1	1	1.1	1	0	1	1	1	Good		6/29/2018	1	NO	Local
407	1	1	1.4	1	0.7	1	1	2.0	1	0	0	0	1	Fair		6/29/2018	3	NO	Local
408	1	1	0.6	1	0.4	1	1	2.0	1	0	1	0	1	Fair		6/29/2018	2	NO	Local
409	1	1	0.2	1	0.4	1	0	2.8	1	0	0	0	1	Fair		6/29/2018	4	NO	Local
410	1	1	2.6	1	1.0	1	0	2.8	1	0	0	0	0	Fair		6/29/2018	5	NO	Local
411	0	0		0		0	0		0	0	0	0	0			6/29/2018	10	NO	Local
412	1	1	5.1	1	0.7	1	1	1.5	1	0	0	0	1	Fair		6/29/2018	3	NO	Local
413	1	1	4.4	1	1.1	1	1	2.0	1	0	1	1	1	Good		6/29/2018	1	NO	Local
414	1	1	1.8	1	0.4	1	1	2.0	1	0	1	1	1	Good		6/29/2018	1	NO	Local
415	1	1	1.9	1	0.6	1	1	0.8	1	0	1	1	1	Good		6/29/2018	1	NO	Local
416	1	1	3.8	1	0.2	1	1	0.8	1	0	1	1	1	Good		6/29/2018	1	NO	Local
417	1	1	3.8	1	0.2	1	1	0.3	1	0	1	1	1	Good		6/29/2018	1	NO	Local
418	1	1	2.8	1	0.7	1	1	0.3	1	0	1	1	0	Good		6/29/2018	2	NO	Local
419	1	1	4.3	1	0.8	1	1	1.4	1	0	1	1	1	Good		6/29/2018	1	NO	Local
420	1	1	2.3	1	0.9	1	1	1.4	1	0	1	1	1	Good		6/29/2018	1	NO	Local
421	0	0		0		0	0		0	0	0	0	0			6/29/2018	10	NO	Local
422	1	1	1.1	1	0.4	1	1	2.0	1	0	1	1	1	Good		6/29/2018	1	NO	Local
423	1	1	2.9	1	0.5	1	1	0.5	1	0	1	1	1	Good		6/29/2018	1	NO	Local
424	0	0		0		0	0		0	0	0	0	0			6/29/2018	10	NO	Local
425	1	1	2.3	1	.2	1	1	.8	0	1	1	1	1	Good		6/29/2018	1	NO	Local
426	1	1	1.8	1	.5	1	1	.8	0	1	1	1	1	Good		6/29/2018	1	NO	Local
427	0	0		0		0	0		0	0	0	0	0			6/29/2018	10	NO	Local
428	1	1	1.9	1	.3	1	1	.6	1	1	1	1	1	Good		6/29/2018	0	YES	Local
429	1	1	2.1	1	1.5	1	0	2.2	0	0	1	1	1	Good		6/29/2018	3	NO	Local
430	1	1	.1	1	.3	1	0	2.2	0	0	1	1	1	Good		6/29/2018	3	NO	Local
431	1	1	2.6	1	.8	1	1	1.4	0	0	1	1	1	Good		6/29/2018	2	NO	Local
432	0	0		0		0	0		0	0	0	0	0			6/29/2018	10	NO	Local
433	0	0		0		0	0		0	0	0	0	0			6/29/2018	10	NO	Local
434	0	0		0		0	0		0	0	0	0	0			6/29/2018	10	NO	Local
435	0	0		0		0	0		0	0	0	0	0			6/29/2018	10	NO	Local
436	1	1	4.6	1	1.2	0	0	no landing	1	0	0	0	1	Fair	doesnt tie into sidewalk	6/29/2018	5	NO	Local
437	1	1	6.3	1	.5	0	1	1.3	1	0	0	0	1	Fair		6/29/2018	4	NO	Local
438	0	0		0		0	0		0	0	0	0	0			6/29/2018	10	NO	Local
439	1	1	6.2	1	.7	0	1	.7	1	0	0	0	1	Fair		6/29/2018	4	NO	Local
440	1	1	3.4	1	.5	1	1	1.3	1	1	1	1	1	Good		6/29/2018	0	YES	Local
441	1	1	2.0	1	.5	1	1	1.3	0	1	1	1	1	Good	water gate valve in sidewalk	6/29/2018	1	NO	Local
444	1	1	4.8	1	0.7	1	1	1.4	1	1	1	1	0	Good	Water gate valve sticking up through the sidewalk.	6/29/2018	1	NO	Local
445	0	0		0		0	0		0	0	0	0	0			6/29/2018	10	NO	Local
446	1	1	2.9	1	.6	1	1	1.6	0	0	1	1	1	Good		6/29/2018	2	NO	Local
448	1	1	3.9	1	.4	1	1	1.0	0	1	1	1	1	Good		6/29/2018	1	NO	Local
449	1	1	1.9	1	.4	1	1	1.8	0	0	1	1	1	Fair		6/29/2018	2	NO	Local
450	1	1	1.6	1	.6	1	1	1.8	0	0	1	1	1	Good		6/29/2018	2	NO	Local
452	1	1	4.2	1	.3	1	1	1.5	1	0	1	1	1	Good		6/29/2018	1	NO	Local
453	1	1	2.0	1	.1	1	1	1.5	0	0	1	1	1	Good		6/29/2018	2	NO	Local
454	1	1	1.5	1	.2	1	1	1.1	0	0	1	1	1	Good		6/29/2018	2	NO	Local
455	1	1	4.1	1	0.0	1	1	1.1	0	0	1	1	1	Good		6/29/2018	2	NO	Local
456	1	1	3.6	1	.2	1	1	.5	1	1	1	1	1	Good		6/29/2018	0	YES	Local
457	1	1	2.7	1	0.0	1	1	.4	0	1	1	1	1	Good		6/29/2018	1	NO	Local
458	0	0		0		0	0		0	0	0	0	0			6/29/2018	10	NO	Local
459	0	0		0		0	0		0	0	0	0	0			6/29/2018	10	NO	Local
460	1	1	4.0	1	.4	1	1	.7	0	1	1	1	1	Good		6/29/2018	1	NO	Local
461	1	1	5.2	1	.7	1	1	.5	0	1	1	1	1	Good		6/29/2018	1	NO	Local
462	1	1	3.5	1	.7	1	1	.5	0	1	1	1	1	Good		6/29/2018	1	NO	Local
463	1	1	1.6	1	.4	1	1	1.8	0	0	0	0	1	Fair		6/29/2018	4	NO	Local
464	1	1	.9	1	.5	1	1	1.8	0	0	0	0	1	Fair		6/29/2018	4	NO	Local

OBJECTID	If walk/trail crosses curb, is there a curb ramp?	Is the Running slope 8.3% or less?	What is the running slope of the curb ramp?	Is the cross slope 2% or less?	What is the cross slope of the curb ramp?	Is the curb ramp width 48" or wider?	Is the Landing 48in sq or more with cross slope 2% or less any dir?	What is the max landing slope?	Is the curb ramp flares slopes 10% or less?	Detectible warnings extend the full width of the curb ramp?	Is approx 75% of truncated domes in good condition?	Do the truncated domes contrast with adjacent surfaces?	Are there no gaps in elevation or distance between concrete panels >1.5"?	What is the overall condition of the curb ramp?	Notes	EditDate	# of Non Compliant	Compliant	Jurisdiction
465	0	0		0		0	0		0	0	0	0	0			6/29/2018	10	NO	Local
466	0	0		0		0	0		0	0	0	0	0			6/29/2018	10	NO	Local
467	1	1	5.3	1	1.6	1	1	.1	1	1	1	1	1	Good		6/29/2018	0	YES	Local
469	1	1	1.3	1	.8	1	1	1.6	0	0	0	0	1	Fair		6/29/2018	4	NO	Local
472	1	1	1.0	1	.8	1	1	.6	1	1	1	1	1	Good		6/29/2018	0	YES	Local
473	1	1	5.7	1	.5	1	0	2.4	0	0	0	0	1	Fair		6/29/2018	5	NO	Local
477	1	1	5.3	1	.3	1	1	.3	1	1	1	1	1	Good		6/29/2018	0	YES	Local
478	1	1	7.0	1	.5	1	1	.9	1	1	1	1	1	Good		6/29/2018	0	YES	Local
479	1	1	4.8	1	1.3	1	1	.5	1	1	1	1	1	Good		6/29/2018	0	YES	Local
480	0	0		0		0	0		0	0	0	0	0			6/25/2018	10	NO	Local
481	1	1	4.5	1	.4	1	1	1.5	1	1	1	1	1	Good		6/29/2018	0	YES	Local
482	1	1	5.0	1	0.1	1	0	2.1	1	0	1	1	1	Good		6/29/2018	2	NO	Local
483	1	1	4.3	1	0.0	1	1	.7	1	1	1	1	1	Good		6/29/2018	0	YES	Local
484	1	1	3.4	1	.1	1	1	.4	1	1	1	1	1	Good		6/29/2018	0	YES	Local
485	1	1	5.1	1	1.1	1	1	.4	1	1	1	1	1	Good		6/29/2018	0	YES	Local
486	1	1	4.7	1	0.1	1	1	0.4	1	0	1	1	1	Good		6/29/2018	1	NO	Local
487	1	1	4.3	1	0.5	1	1	0.3	1	0	1	1	1	Good		6/29/2018	1	NO	Local
488	1	1	4.4	1	1.2	1	0	2.8	1	0	1	1	1	Good		6/29/2018	2	NO	Local
489	1	1	4.0%	1	.5%	1	1	.9%	0	1	1	1	1	Good		6/25/2018	1	NO	Local
490	0	0		0		0	0		0	0	0	0	0			6/25/2018	10	NO	Local
493	0	0		0		0	0		0	0	0	0	0			6/25/2018	10	NO	Local
494	0	0		0		0	0		0	0	0	0	0			6/25/2018	10	NO	Local
495	0	0		0		0	0		0	0	0	0	0			6/25/2018	10	NO	Local
496	1	1	2.1%	1	.8%	1	1	1.2%	1	0	0	0	0	Fair	no detect warning panels	6/25/2018	4	NO	Local
497	0	0		0		0	0		0	0	0	0	0			6/25/2018	10	NO	Local
498	1	1	1.7%	0	3.1%	0	1	.5%	0	0	0	0	1	Fair	no detect panels, not full width	6/25/2018	6	NO	Local
499	1	1	4.4%	1	.7%	1	1	.2%	1	0	0	0	1	Fair	no detectible warning panels	6/25/2018	3	NO	Local
500	1	1	3.1%	1	.5%	1	1	.2%	0	0	0	0	1	Fair		6/25/2018	4	NO	Local
501	1	1	2.4%	1	1.7%	1	1	1.2%	1	0	0	0	1	Fair	no detect warning panels	6/25/2018	3	NO	Local
502	1	1	5.6%	1	.8	1	1	1.6%	0	0	0	0	1	Fair	no detect panels, grass	6/25/2018	4	NO	Local
503	0	0		0		0	0		0	0	0	0	0			6/25/2018	10	NO	Local
504	0	0		0		0	0		0	0	0	0	0			6/25/2018	10	NO	Local
505	0	0		0		0	0		0	0	0	0	0			6/25/2018	10	NO	Local
506	0	0		0		0	0		0	0	0	0	0		major gap from curb to sidewalk	6/25/2018	10	NO	Local
507	0	0		0		0	0		0	0	0	0	0			6/25/2018	10	NO	Local
508	0	0		0		0	0		0	0	0	0	0			6/25/2018	10	NO	Local
509	0	0		0		0	0		0	0	0	0	0			6/25/2018	10	NO	Local
510	0	0		0		0	0		0	0	0	0	0			6/25/2018	10	NO	Local
511	1	1	3.1%	1	.4%	1	0	2.2% ns dir	0	0	0	0	0	Fair	1.5" gap on landing, no detectible warning panels	6/25/2018	6	NO	Local
512	1	1	2.9%	1	.7%	1	1	1.9%	0	0	0	0	0	Fair	no detectable warning panels or flares	6/25/2018	5	NO	Local
513	0	0		0		0	0		0	0	0	0	0			6/25/2018	10	NO	Local
514	0	0		0		0	0		0	0	0	0	0			6/25/2018	10	NO	Local
515	1	1	2.8%	1	.5%	0	1	.7%	0	0	0	0	0	Fair	growth of grass into ramp are	6/25/2018	6	NO	Local
516	1	1	4.3%	1	1.9%	1	1	1.7%	0	0	0	0	0	Fair	no truncated domes of flares	6/25/2018	5	NO	Local
517	1	1	3.2%	1	1.3%	1	1	.4%	0	0	0	0	0	Fair	no detectible warning panels or flares	6/25/2018	5	NO	Local
518	0	0		0		0	0		0	0	0	0	0			6/25/2018	10	NO	Local
519	0	0		0		0	0		0	0	0	0	0			6/25/2018	10	NO	Local
520	0	0		0		0	0		0	0	0	0	0			6/25/2018	10	NO	Local
521	0	0		0		0	0		0	0	0	0	0			6/25/2018	10	NO	Local
522	0	0		0		0	0		0	0	0	0	0			6/25/2018	10	NO	Local
523	0	0		0		0	0		0	0	0	0	0			6/25/2018	10	NO	Local
524	0	0		0		0	0		0	0	0	0	0			6/25/2018	10	NO	Local
525	0	0		0		0	0		0	0	0	0	0			6/25/2018	10	NO	Local
526	0	0		0		0	0		0	0	0	0	0			6/25/2018	10	NO	Local
527	0	0		0		0	0		0	0	0	0	0			6/25/2018	10	NO	Local
528	1	1	5.2%	1	1.1%	1	1	1.2%	0	1	1	1	1	Good		6/25/2018	1	NO	Local
529	1	1	4.1	1	0.8	1	1	1.2	0	1	1	1	0	Good		6/25/2018	2	NO	Local
530	1	1	5.5%	1	1.7%	1	0	2.2%	0	1	1	1	0	Fair	grass in sidewalks	6/25/2018	3	NO	Local
531	1	1	4.2	1	0.2	1	0	2.2	0	1	1	1	0	Good		6/25/2018	3	NO	Local
532	1	1	2.0%	1	.3%	1	1	1.5%	0	0	0	0	1	Fair	no detectible panels	6/25/2018	4	NO	Local
533	0	0		0		0	0		0	0	0	0	0			6/25/2018	10	NO	Local
534	1	1	2.9%	1	.9%	1	1	.7%	0	0	0	0	1	Fair	no detectible panel	6/25/2018	4	NO	Local

OBJECTID	If walk/trail crosses curb, is there a curb ramp?	Is the Running slope 8.3% or less?	What is the running slope of the curb ramp?	Is the cross slope 2% or less?	What is the cross slope of the curb ramp?	Is the curb ramp width 48" or wider?	Is the Landing 48in sq or more with cross slope 2% or less any dir?	What is the max landing slope?	Is the curb ramp flares slopes 10% or less?	Detectible warnings extend the full width of the curb ramp?	Is approx 75% of truncated domes in good condition?	Do the truncated domes contrast with adjacent surfaces?	Are there no gaps in elevation or distance between concrete panels >1.5"?	What is the overall condition of the curb ramp?	Notes	EditDate	# of Non Compliant	Compliant	Jurisdiction
535	0	0		0		0	0		0	0	0	0	0			6/25/2018	10	NO	Local
536	1	1	3.2	1	0.2	1	1	0.3	0	1	1	1	1	Good		6/25/2018	1	NO	Local
537	1	1	3.6%	1	.1%	0	0	.3%	0	0	0	0	1	Fair	no detect panela	6/25/2018	6	NO	Local
538	0	0		0		0	0		0	0	0	0	0			6/25/2018	10	NO	Local
539	1	1	3.1%	1	.3%	1	1	.6%	1	0	0	0	1	Fair	wearing at the landing and a slight gap after landing	6/25/2018	3	NO	Local
540	0	0		0		0	0		0	0	0	0	0		Bus Stop Route 11	6/25/2018	10	NO	Local
541	0	0		0		0	0		0	0	0	0	0			6/25/2018	10	NO	Local
542	1	1	5.4	1	0.2	1	0	2.3	0	0	0	0	1	Fair		6/25/2018	5	NO	Local
543	0	0		0		0	0		0	0	0	0	0			6/25/2018	10	NO	Local
544	1	1	3.3	1	.1	1	1	.6	0	0	0	0	1	Fair	no det panel, cracking in landing	6/25/2018	4	NO	Local
545	0	0		0		0	0		0	0	0	0	0			6/25/2018	10	NO	Local
546	0	0		0		0	0		0	0	0	0	0			6/25/2018	10	NO	Local
547	0	0		0		0	0		0	0	0	0	0			6/25/2018	10	NO	Local
548	1	1	3.9%	1	.4%	1	1	1.1%	1	1	1	1	1	Good		6/25/2018	0	YES	State
549	1	1	1.3%	1	.8%	1	1	.9%	0	1	1	1	1	Good		6/25/2018	1	NO	State
551	1	1	3.1%	1	.4%	1	1	.7%	1	1	1	1	0	Good		6/25/2018	1	NO	State
552	0	0		0		0	0		0	0	0	0	0			6/25/2018	10	NO	Local
555	1	1	0.3	1	0.5	1	1	0.5	1	0	0	0	1	Fair		6/26/2018	3	NO	Local
556	1	1	0.8	1	0.8	1	1	0.8	1	0	0	0	1	Fair		6/26/2018	3	NO	Local
557	0	0		0		0	0		0	0	0	0	0			6/25/2018	10	NO	Local
558	0	0		0		0	0		0	0	0	0	0			6/25/2018	10	NO	Local
559	0	0		0		0	0		0	0	0	0	0			6/25/2018	10	NO	Local
560	0	0		0		0	0		0	0	0	0	0			6/25/2018	10	NO	Local
561	1	1	2.8	1	0.5	0	1	1.3	0	1	1	1	1	Good		6/25/2018	2	NO	Local
562	0	0		0		0	0		0	0	0	0	0			6/25/2018	10	NO	Local
563	1	1	3.3	1	0.0	1	1	0.8	0	1	1	1	1	Good		6/27/2018	1	NO	Local
564	1	1	3.8	1	0.3	1	1	0.8	0	1	1	1	0	Good		6/25/2018	2	NO	Local
565	0	0		0		0	0		0	0	0	0	0		Tree overhang on sidewalk.	6/25/2018	10	NO	Local
566	0	0		0		0	0		0	0	0	0	0			6/25/2018	10	NO	Local
567	1	1	1.9%	1	.2%	1	1	.8%	0	0	0	0	1	Fair	no detect panels	6/25/2018	4	NO	Local
568	1	1	1.4%	1	.5%	1	1	.6%	0	0	0	0	1	Fair	no detect panels	6/25/2018	4	NO	Local
569	1	1	2.6%	1	.8%	1	1	1.1%	1	0	0	0	1	Fair	no detect panels	6/25/2018	3	NO	Local
570	0	0		0		0	0		0	0	0	0	0			6/25/2018	10	NO	Local
571	0	0		0		0	0		0	0	0	0	0			6/25/2018	10	NO	Local
572	1	1	6.5	1	1.0	0	0	1.1	0	0	0	0	1	Fair		6/25/2018	6	NO	Local
573	1	1	5.2%	1	1.2%	1	0	1.3%	0	0	0	0	1	Fair	no detect panels	6/25/2018	5	NO	Local
574	1	1	3.8	1	.4	1	1	2.0	0	1	1	1	1	Good		6/25/2018	1	NO	Local
575	0	0		0		0	0		0	0	0	0	0			6/25/2018	10	NO	Local
576	1	1	3.6	1	0	1	1	2.0	1	1	1	1	1	Good		6/25/2018	0	YES	Local
577	0	0		0		0	0		0	0	0	0	0			6/25/2018	10	NO	Local
578	0	0		0		0	0		0	0	0	0	0			6/25/2018	10	NO	Local
579	0	0		0		0	0		0	0	0	0	0			6/25/2018	10	NO	Local
580	0	0		0		0	0		0	0	0	0	0			6/25/2018	10	NO	Local
581	0	0		0		0	0		0	0	0	0	0			6/25/2018	10	NO	Local
582	0	0		0		0	0		0	0	0	0	0			6/25/2018	10	NO	Local
583	0	0		0		0	0		0	0	0	0	0			6/25/2018	10	NO	Local
584	0	0		0		0	0		0	0	0	0	0			6/25/2018	10	NO	Local
585	0	0		0		0	0		0	0	0	0	0			6/25/2018	10	NO	Local
586	0	0		0		0	0		0	0	0	0	0			6/25/2018	10	NO	Local
587	0	0		0		0	0		0	0	0	0	0			6/25/2018	10	NO	Local
588	0	0		0		0	0		0	0	0	0	0			6/25/2018	10	NO	Local
589	1	1	4.3%	1	.3%	1	0	2.9%	0	0	0	0	1	Fair	no detect panels	6/25/2018	5	NO	Local
590	0	0		0		0	0		0	0	0	0	0			6/25/2018	10	NO	Local
591	0	0		0		0	0		0	0	0	0	0			6/25/2018	10	NO	Local
592	0	0		0		0	0		0	0	0	0	0			6/25/2018	10	NO	Local
593	0	0		0		0	0		0	0	0	0	0			6/25/2018	10	NO	Local
594	0	0		0		0	0		0	0	0	0	0			6/25/2018	10	NO	Local
595	1	1	3.8%	1	.8%	1	1	.8%	0	0	0	0	0	Fair	about 1.25" gap no detect panels	6/25/2018	5	NO	Local
596	0	0		0		0	0		0	0	0	0	0			6/25/2018	10	NO	Local
597	1	1	2.6%	1	.5%	1	1	.6%	0	1	1	1	1	Good		6/25/2018	1	NO	Local
598	1	1	2.8%	1	.5%	1	1	.6%	1	1	1	1	1	Good		6/25/2018	0	YES	Local
599	1	1	4.6%	1	.8%	1	1	1.0%	1	1	1	1	1	Good	new ramps	6/25/2018	0	YES	Local

OBJECTID	If walk/trail crosses curb, is there a curb ramp?	Is the Running slope 8.3% or less?	What is the running slope of the curb ramp?	Is the cross slope 2% or less?	What is the cross slope of the curb ramp?	Is the curb ramp width 48" or wider?	Is the Landing 48in sq or more with cross slope 2% or less any dir?	What is the max landing slope?	Is the curb ramp flares slopes 10% or less?	Detectible warnings extend the full width of the curb ramp?	Is approx 75% of truncated domes in good condition?	Do the truncated domes contrast with adjacent surfaces?	Are there no gaps in elevation or distance between concrete panels >1.5"?	What is the overall condition of the curb ramp?	Notes	EditDate	# of Non Compliant	Compliant	Jurisdiction
600	1	1	3.8%	1	.3%	1	1	1.0%	0	1	1	1	0	Good		6/25/2018	2	NO	Local
601	1	1	2.8%	1	1.8	1	1	1.4	1	1	1	1	1	Good		6/25/2018	0	YES	Local
602	1	1	3.9	1	.3	1	1	1.4	1	1	1	1	1	Good		6/25/2018	0	YES	Local
603	0	0		0		0	0		0	0	0	0	0			6/25/2018	10	NO	Local
604	0	0		0		0	0		0	0	0	0	0			6/25/2018	10	NO	Local
605	0	0		0		0	0		0	0	0	0	0			6/25/2018	10	NO	Local
606	0	0		0		0	0		0	0	0	0	0			6/25/2018	10	NO	Local
607	1	1	4.2	1	.4	1	1	2.0	0	1	1	1	1	Good		6/25/2018	1	NO	Local
608	1	1	1.8	1	0.1	1	1	2.0	0	1	1	1	0	Good		6/25/2018	2	NO	Local
609	1	1	1.9	1	0.2	1	1	1.3	0	1	1	1	1	Good		6/25/2018	1	NO	Local
610	1	1	2.6%	1	.5%	1	1	1.3%	1	1	1	1	1	Good		6/25/2018	0	YES	Local
611	0	0		0		0	0		0	0	0	0	0			6/25/2018	10	NO	Local
612	0	0		0		0	0		0	0	0	0	0			6/25/2018	10	NO	Local
613	0	0		0		0	0		0	0	0	0	0			6/25/2018	10	NO	Local
614	0	0		0		0	0		0	0	0	0	0			6/25/2018	10	NO	Local
615	1	1	2.4	1	1.1	1	1	1.1	0	1	1	1	1	Good		6/25/2018	1	NO	Local
616	1	1	2.0	1	0.0	1	1	1.1	0	1	1	1	0	Good		6/25/2018	2	NO	Local
617	0	0		0		0	0		0	0	0	0	0			6/25/2018	10	NO	Local
618	0	0		0		0	0		0	0	0	0	0			6/25/2018	10	NO	Local
619	1	1	2.9%	1	.3%	1	1	.9%	1	1	1	1	1	Good		6/25/2018	0	YES	Local
620	1	1	3.0%	1	.3%	1	1	.9%	0	1	1	1	1	Good		6/25/2018	1	NO	Local
621	1	1	4.1%	1	.3%	1	1	1.0%	0	1	1	1	1	Good		6/25/2018	1	NO	Local
622	1	1	4.6%	1	.2%	1	1	1.0%	0	1	1	1	1	Good		6/25/2018	1	NO	Local
623	0	0		0		0	0		0	0	0	0	0			6/25/2018	10	NO	Local
624	1	1	1.8	1	0.1	1	1	1.6	0	0	0	0	1	Fair		6/25/2018	4	NO	Local
625	0	0		0		0	0		0	0	0	0	0			6/25/2018	10	NO	Local
626	0	0		0		0	0		0	0	0	0	0			6/25/2018	10	NO	Local
627	0	0		0		0	0		0	0	0	0	0			6/25/2018	10	NO	Local
628	0	0		0		0	0		0	0	0	0	0			6/25/2018	10	NO	Local
629	0	0		0		0	0		0	0	0	0	0			6/25/2018	10	NO	Local
630	0	0		0		0	0		0	0	0	0	0			6/25/2018	10	NO	Local
631	1	1	6.4%	1	.7%	1	1	.8%	0	0	0	0	1	Fair	no detect panels	6/25/2018	4	NO	Local
632	1	1	5.4%	1	.5%	1	1	.9%	0	0	0	0	1	Fair	no detect panels	6/25/2018	4	NO	Local
633	1	1	.7%	1	.3%	1	1	.6%	1	1	1	1	1	Good		6/25/2018	0	YES	State
634	1	1	1.2	1	0.5	1	0	0.6	0	1	1	1	1	Good		6/25/2018	2	NO	State
635	1	1	1.2	1	0.7	1	1	0.9	0	1	1	1	1	Good		6/25/2018	1	NO	State
636	1	1	2.5%	1	.4%	1	1	.9%	1	1	1	1	1	Good		6/25/2018	0	YES	State
637	1	1	.1%	1	.7%	1	0	no landing	1	1	1	1	1	Good	proposed sidewalk	6/25/2018	1	NO	State
638	1	1	0.7	1	0.7	0	0		0	1	1	1	1	Good		6/25/2018	3	NO	State
639	0	0		0		0	0		0	0	0	0	0			6/25/2018	10	NO	State
640	1	1	4.5%	1	.8%	1	1	.7%	1	1	1	1	1	Good		6/25/2018	0	YES	State
641	1	1	4.6%	1	.1%	1	1	.8%	1	1	1	1	1	Good		6/25/2018	0	YES	State
642	0	0		0		0	0		0	0	0	0	0			6/25/2018	10	NO	State
643	1	1	2.6	1	0.5	1	1	0.8	0	1	1	1	1	Good		6/25/2018	1	NO	Local
644	1	1	3.5	1	.4	1	1	.8	0	1	1	1	1	Good		6/25/2018	1	NO	Local
645	1	1	2.7%	1	.2%	0	1	.7%	1	1	1	1	1	Good		6/25/2018	1	NO	Local
646	1	1	4.2%	1	.5%	1	1	.7%	1	1	1	1	1	Good		6/25/2018	0	YES	Local
647	1	1	1.8	1	.9	1	1	1.2	1	0	1	1	1	Good		6/25/2018	1	NO	Local
648	1	1	6.2	1	1.0	1	1	0.6	0	0	0	0	0	Fair	Vegetation growth on bottom of curb ramp.	6/25/2018	5	NO	Local
649	1	1	4.0	1	1.2	1	1	0.7	0	0	0	0	1	Fair		6/25/2018	4	NO	Local
650	1	1	2.3	0	3.7	0	0	2.5	0	0	0	0	1	Fair	no detect panels	6/25/2018	7	NO	Local
651	1	1	4.6	0	1.8	0	0	2.5	0	0	0	0	1	Fair	no det panels	6/25/2018	7	NO	Local
652	1	1	3.5	1	0.5	1	1	0.9	0	1	1	1	1	Good		6/25/2018	1	NO	Local
653	1	1	4.5%	1	.1%	1	1	.9%	0	1	1	1	1	Good		6/25/2018	1	NO	Local
655	1	1	3.0	1	1.0	1	1	1.4	0	1	1	1	1	Good		6/25/2018	1	NO	Local
656	1	1	1.9	1	.6	1	1	.3	0	1	1	1	1	Good		6/25/2018	1	NO	Local
657	1	1	2.3	1	.1	1	1	.3	1	1	1	1	1	Good		6/25/2018	0	YES	Local
658	1	1	2.9	1	0.4	1	1	0.8	0	1	1	1	1	Good		6/25/2018	1	NO	Local
659	1	1	2.7	1	0.2	1	1	0.8	0	1	1	1	1	Good		6/25/2018	1	NO	Local
660	1	1	2.7	1	0.6	1	1	1.4	0	1	1	1	1	Good		6/25/2018	1	NO	Local
661	1	1	2.1	1	.4	1	1	1.4	0	1	1	1	1	Good		6/25/2018	1	NO	Local
662	1	1	2.6	1	0.0	1	1	0.7	0	1	1	1	1	Good		6/25/2018	1	NO	Local

OBJECTID	If walk/trail crosses curb, is there a curb ramp?	Is the Running slope 8.3% or less?	What is the running slope of the curb ramp?	Is the cross slope 2% or less?	What is the cross slope of the curb ramp?	Is the curb ramp width 48" or wider?	Is the Landing 48in sq or more with cross slope 2% or less any dir?	What is the max landing slope?	Is the curb ramp flares slopes 10% or less?	Detectible warnings extend the full width of the curb ramp?	Is approx 75% of truncated domes in good condition?	Do the truncated domes contrast with adjacent surfaces?	Are there no gaps in elevation or distance between concrete panels >1.5"?	What is the overall condition of the curb ramp?	Notes	EditDate	# of Non Compliant	Compliant	Jurisdiction
663	1	1	2.4	1	0.3	1	1	0.7	0	1	1	1	0	Good		6/25/2018	2	NO	Local
664	1	1	6.8	1	.5	0	1	.6	0	0	0	0	1	Fair		6/25/2018	5	NO	Local
665	1	1	7.3	1	.3	1	0	2.3	0	0	0	0	1	Poor	gap, curb by edge is cracked	6/25/2018	5	NO	Local
666	1	1	1.9	1	0.6	1	0	2.3	0	0	0	0	1	Fair		6/25/2018	5	NO	Local
667	1	1	2.3	1	1.6	0	1	1.1	1	0	0	0	1	Fair	no detect panels	6/25/2018	4	NO	Local
668	1	1	4.8	1	2.2	0	0	2.1	1	0	0	0	1	Fair		6/26/2018	5	NO	Local
669	1	1	7.2	1	1.4	0	1	1.0	1	0	0	0	1	Fair		6/26/2018	4	NO	Local
670	1	1	8.2	1	.6	1	0	3.5	1	0	0	0	1	Fair		6/26/2018	4	NO	Local
671	1	1	4.8	0	2.1	1	1	.6	1	0	0	0	1	Fair		6/26/2018	4	NO	Local
672	0	0		0		0	0		0	0	0	0	0			6/25/2018	10	NO	Local
674	1	1	5.5	1	.6	1	1	1.1	1	0	0	0	1	Fair	no detect panels	6/25/2018	3	NO	Local
675	1	1	4.0	1	.7	1	1	.5	0	0	0	0	0	Fair		6/26/2018	5	NO	Local
676	1	1	4.9	1	1.5	1	1	1.3	0	0	0	0	1	Fair	no detect panels	6/25/2018	4	NO	Local
677	1	1	3.7	1	1.6	0	1	1.3	0	0	0	0	1	Fair	bad spot in concrete	6/25/2018	5	NO	Local
678	1	1	1.2	1	0.1	1	1	0.3	0	0	0	0	0	Fair		6/25/2018	5	NO	Local
679	1	1	4.5	1	1.1	1	1	.3	0	0	0	0	1	Fair		6/25/2018	4	NO	Local
680	0	0		0		0	0		0	0	0	0	0			6/26/2018	10	NO	Local
681	1	1	3.9	1	.3	1	1	1.4	1	1	1	1	1	Good		6/25/2018	0	YES	Local
682	1	1	4.2	1	.4	1	1	1.4	0	1	1	1	1	Good		6/25/2018	1	NO	Local
683	1	1	4.5	1	0.9	1	1	0.9	0	0	1	1	1	Good		6/25/2018	2	NO	Local
684	1	1	4.0	1	0.6	1	1	0.9	0	0	1	1	1	Good		6/25/2018	2	NO	Local
685	1	1	2.7	1	1.1	1	1	1.0	1	1	1	1	1	Good		6/25/2018	0	YES	Local
686	1	1	3.8	1	.9	1	1	1.0	0	1	1	1	1	Good		6/25/2018	1	NO	Local
687	1	1	4.0	1	0.5	1	1	0.7	0	0	1	1	1	Good		6/25/2018	2	NO	Local
688	1	1	2.9	1	0.2	1	1	0.7	0	1	1	1	1	Good		6/25/2018	1	NO	Local
689	1	1	4.2	1	.3	1	1	.7	0	1	1	1	1	Good		6/25/2018	1	NO	Local
690	1	1	2.4	1	0.7	1	1	0.7	0	1	1	1	1	Good		6/25/2018	1	NO	Local
691	1	1	3.6	1	.3	0	0	.6	0	0	0	0	0	Poor		6/26/2018	7	NO	Local
692	1	1	4.1	1	.9	1	1	1.5	0	0	0	0	1	Fair	no detect panels	6/25/2018	4	NO	Local
693	1	1	4.2	1	1.5	1	1	1.5	0	0	0	0	1	Good		6/25/2018	4	NO	Local
694	1	1	4.2	1	.7	1	1	1.3	0	0	0	0	1	Fair	slight gap	6/25/2018	4	NO	Local
695	1	1	5.8	1	.2	1	1	1.3	0	0	0	0	1	Fair		6/25/2018	4	NO	Local
696	1	1	0.9	1	0.1	1	1	1.1	0	0	1	1	1	Good		6/25/2018	2	NO	Local
697	1	1	5.6	1	0.6	1	1	1.1	0	0	1	1	1	Good		6/25/2018	2	NO	Local
698	1	1	2.7	1	0.1	1	1	0.7	0	1	1	1	1	Good		6/25/2018	1	NO	Local
699	1	1	2.9	1	.1	1	1	.7	1	1	1	1	1	Good		6/25/2018	0	YES	Local
700	1	1	1.8	1	0.8	1	1	1.2	0	0	1	1	0	Good		6/25/2018	3	NO	Local
701	1	1	2.5	1	0.7	1	1	1.2	0	0	1	1	1	Good		6/25/2018	2	NO	Local
702	1	1	1.5%	1	1.4	1	0	2.8	0	0	0	0	1	Fair	no detect panels	6/25/2018	5	NO	Local
703	1	1	3.4	1	0.2	1	0	2.8	0	0	0	0	1	Fair		6/25/2018	5	NO	Local
704	1	1	7.7	1	1.1	1	1	2.0	0	1	1	1	1	Good		6/25/2018	1	NO	Local
705	1	1	4.1%	1	1.1	1	1	1.2%	0	0	0	0	1	Fair	no detect panel	6/25/2018	4	NO	Local
706	1	1	4.7	1	1.1	1	1	0.9	0	1	1	1	1	Good		6/25/2018	1	NO	Local
707	1	1	3.3	1	0.2	1	1	0.9	0	1	1	1	1	Good		6/25/2018	1	NO	Local
708	1	1	3.5	1	0.4	1	1	0.9	0	1	1	1	0	Good		6/25/2018	2	NO	Local
709	1	1	3.8	1	1.3	1	1	0.9	0	1	1	1	1	Good		6/25/2018	1	NO	Local
710	1	1	5.4%	1	1.8%	1	0	4.2%	1	0	1	1	1	Fair	some grass	6/25/2018	2	NO	Local
711	1	1	2.6%	0	3.0%	1	0	4.2%	0	1	1	1	1	Fair		6/25/2018	3	NO	Local
712	1	1	4.2%	1	.5%	0	0	no landing	1	1	1	1	1	Good		6/25/2018	2	NO	Local
713	1	1	4.2	1	0	1	1	.5	1	1	1	1	1	Good		6/26/2018	0	YES	State
714	1	1	2.2	1	0.8	1	1	.5	1	1	1	1	1	Good		6/26/2018	0	YES	State
715	1	1	3.7	1	.3	1	1	1.2	1	1	1	1	1	Good		6/26/2018	0	YES	State
716	1	1	3.6	1	.1	1	1	1.2	1	1	1	1	1	Good		6/26/2018	0	YES	State
717	1	1	3.4	1	1.1	1	1	1.2	1	1	1	1	1	Good		6/26/2018	0	YES	State
718	1	1	1.0	1	.3	1	1	1.2	0	1	1	1	1	Good		6/26/2018	1	NO	State
719	1	1	3.6	1	.7	1	1	.9	1	1	1	1	1	Good		6/26/2018	0	YES	State
720	1	1	4.8	1	.7	1	1	1.4	1	1	1	1	1	Good		6/26/2018	0	YES	State
721	1	1	3.1	1	1.5	1	0	3.5	1	0	1	1	1	Fair		6/26/2018	2	NO	Local
722	1	1	5.1	1	.1	1	0	3.5	1	1	1	1	1	Fair		6/26/2018	1	NO	Local
723	1	1	2.2	0	2.1	1	1	3.1	0	1	1	1	1	Good		6/25/2018	2	NO	Local
724	1	1	4.0	1	1.2	1	0	3.1	0	1	1	1	1	Good		6/25/2018	2	NO	Local
725	1	1	4.1	1	0.3	1	1	1.7	0	0	1	1	1	Good		6/26/2018	2	NO	Local

OBJECTID	If walk/trail crosses curb, is there a curb ramp?	Is the Running slope 8.3% or less?	What is the running slope of the curb ramp?	Is the cross slope 2% or less?	What is the cross slope of the curb ramp?	Is the curb ramp width 48" or wider?	Is the Landing 48in sq or more with cross slope 2% or less any dir?	What is the max landing slope?	Is the curb ramp flares slopes 10% or less?	Detectible warnings extend the full width of the curb ramp?	Is approx 75% of truncated domes in good condition?	Do the truncated domes contrast with adjacent surfaces?	Are there no gaps in elevation or distance between concrete panels >1.5"?	What is the overall condition of the curb ramp?	Notes	EditDate	# of Non Compliant	Compliant	Jurisdiction
726	1	1	3.9	1	0.0	1	1	1.7	0	0	1	1	1	Good		6/26/2018	2	NO	Local
727	1	1	2.1	1	0.3	1	0	2.5	1	0	1	1	1	Good		6/26/2018	2	NO	Local
728	1	1	6.1	0	2.7	1	0	2.5	1	0	1	1	0	Good		6/26/2018	4	NO	Local
729	1	1	2.8	1	0.7	1	1	1.5	1	0	0	0	0	Fair	1.5" or greater gap between curb ramp and back of curb.	6/26/2018	4	NO	Local
730	0	0		0		0	0		0	0	0	0	0			6/26/2018	10	NO	Local
731	1	1	3.4	1	0.0	1	0	2.8	1	0	0	0	1	Fair		6/26/2018	4	NO	Local
732	1	1	3.4	1	.2	1	0	2.8	1	0	0	0	1	Fair		6/26/2018	4	NO	Local
733	1	1	4.0	1	2.0	1	0	2.8	0	0	0	0	1	Fair		6/26/2018	5	NO	Local
734	1	1	4.5	1	.3	1	0	2.8	1	0	0	0	1	Fair		6/26/2018	4	NO	Local
735	1	1	5.6	1	1.5	1	0	2.8	0	0	0	0	1	Fair		6/26/2018	5	NO	Local
736	0	0		0		0	0		0	0	0	0	0			6/26/2018	10	NO	Local
737	1	1	1.2	1	.3	1	1	.7	1	1	1	1	1	Good		6/26/2018	0	YES	State
738	1	1	3.1	1	.2	1	1	.7	1	1	1	1	1	Good		6/26/2018	0	YES	State
739	1	1	1.9	1	.6	1	1	1.2	0	1	1	1	1	Good		6/26/2018	1	NO	State
740	1	1	3.9	1	.7	1	1	1.2	0	1	1	1	1	Good		6/26/2018	1	NO	State
741	1	1	1.8	1	.2	1	1	1.0	1	1	1	1	1	Good		6/26/2018	0	YES	State
742	1	1	1.5	1	.5	1	1	1.0	0	1	1	1	1	Good		6/26/2018	1	NO	State
743	1	1	2.3	1	.3	1	1	1.0	1	1	1	1	1	Good		6/26/2018	0	YES	State
744	1	1	2.0	1	.4	1	1	1.0	1	1	1	1	1	Good		6/26/2018	0	YES	State
745	1	1	5.2	1	.2	1	0	2.4	1	0	0	0	1	Fair	small gap between ramp and sidewalk, grass	6/26/2018	4	NO	Local
746	1	1	5.3	1	2.0	1	0	2.4	1	0	0	0	1	Fair		6/26/2018	4	NO	Local
747	1	0	9.1	1	1.9	0	1	1.0	1	0	0	0	1	Poor		6/26/2018	5	NO	Local
748	1	1	8.1	1	1.3	1	1	1.0	1	0	0	0	1	Poor	Vegetation growth in the cracks of the curb ramp.	6/26/2018	3	NO	Local
749	1	1	6.9	1	1.4	1	1	2.0	0	0	0	0	1	Fair		6/26/2018	4	NO	Local
750	1	1	9.0	1	2.0	1	1	2.0	0	0	0	0	1	Fair	no det panels	6/26/2018	4	NO	Local
751	1	1	6.3	1	.7	1	0	2.2	0	0	0	0	1	Fair		6/26/2018	5	NO	Local
752	1	1	5.8	1	1.2	1	0	2.2	1	0	0	0	1	Fair		6/26/2018	4	NO	Local
753	1	1	4.0	1	.5	1	1	.7	1	1	1	1	1	Good		6/26/2018	0	YES	State
754	1	1	2.9	1	.1	1	1	.7	1	1	1	1	1	Good		6/26/2018	0	YES	State
755	1	1	3.3	1	.2	1	1	.8	1	1	1	1	1	Good		6/26/2018	0	YES	State
756	1	1	4.6	1	0.2	1	1	0.8	1	1	1	1	1	Good		6/26/2018	0	YES	State
757	1	1	0.5	1	0.9	1	1	1.1	1	1	1	1	1	Good		6/26/2018	0	YES	State
758	1	1	2.4	1	0.4	1	1	0.5	1	1	1	1	1	Good		6/26/2018	0	YES	State
759	1	1	3.0	1	0.3	1	1	0.5	1	1	1	1	0	Good		6/26/2018	1	NO	State
760	1	1	2.3	1	.5	1	1	1.0	0	1	1	1	1	Good		6/26/2018	1	NO	State
761	1	1	3.5	1	.4	1	1	1.0	1	1	1	1	1	Good		6/26/2018	0	YES	State
762	1	1	2.9	1	1.2	1	1	1.2	1	1	1	1	1	Good		6/26/2018	0	YES	State
763	1	1	4.2	1	0.5	1	1	1.2	1	1	1	1	1	Good		6/26/2018	0	YES	State
764	1	1	0.8	1	0.2	1	1	0.7	1	1	1	1	1	Good		6/26/2018	0	YES	State
765	1	1	0.7	1	0.1	1	1	0.7	1	1	1	1	1	Good		6/26/2018	0	YES	State
766	1	1	4.5	1	.9	1	1	1.3	1	1	1	1	1	Good		6/26/2018	0	YES	State
767	1	1	2.7	1	1.2	1	1	1.3	1	1	1	1	1	Good		6/26/2018	0	YES	State
768	1	1	5.8	1	0.5	0	1	1.2	1	0	0	0	1	Fair		6/26/2018	4	NO	Local
769	1	1	3.8%	1	.4%	1	1	.8%	1	1	1	1	1	Good		6/25/2018	0	YES	State
770	1	1	5.4	1	1.8	1	1	0.8	0	0	0	0	0	Fair		6/25/2018	5	NO	Local
771	1	1	2.9	0	2.1	1	1	1.0	0	0	0	0	0	Fair		6/25/2018	6	NO	Local
772	1	1	1.8%	1	.5%	1	1	1.8%	0	0	0	0	1	Fair	no detect panels	6/25/2018	4	NO	Local
773	1	1	2.2%	1	1.2%	1	1	.6%	0	1	1	1	1	Good		6/25/2018	1	NO	Local
774	1	1	4.2	1	1.3	1	1	0.8	0	1	1	1	0	Good		6/25/2018	2	NO	Local
775	1	1	1.5%	1	.6%	1	1	.8%	0	1	1	1	1	Good		6/25/2018	1	NO	Local
776	1	1	2.0%	1	2.0%	1	1	1.2%	0	1	1	1	1	Good		6/25/2018	1	NO	Local
777	1	1	0.3	1	1.2	1	1	0.6	0	1	1	1	1	Good		6/25/2018	1	NO	Local
778	1	1	1.2%	1	1.8%	1	1	.8	1	1	1	1	1	Good		6/25/2018	0	YES	Local
779	1	1	1.9	1	0.2	1	1	1.6	0	1	1	1	1	Good		6/25/2018	1	NO	Local
780	1	1	1.5	1	1.1	1	1	1.6	0	1	1	1	1	Good		6/25/2018	1	NO	Local
782	1	1	.5%	1	.8%	1	1	1.9	0	1	1	1	1	Good		6/25/2018	1	NO	Local
783	1	1	4.0	1	1.6	1	1	1.1	0	1	1	1	1	Good		6/25/2018	1	NO	Local
784	1	1	2.3%	1	.2%	1	1	.9	0	1	1	1	1	Good		6/25/2018	1	NO	Local
785	1	1	1.8	1	0.5	1	1	1.9	0	1	1	1	1	Good		6/25/2018	1	NO	Local
786	1	1	4.7	1	0.3	1	1	1.9	0	1	1	1	1	Good		6/25/2018	1	NO	Local
787	1	1	3.5	1	.9	1	1	1.4	1	1	1	1	1	Good		6/25/2018	0	YES	Local

OBJECTID	If walk/trail crosses curb, is there a curb ramp?	Is the Running slope 8.3% or less?	What is the running slope of the curb ramp?	Is the cross slope 2% or less?	What is the cross slope of the curb ramp?	Is the curb ramp width 48" or wider?	Is the Landing 48in sq or more with cross slope 2% or less any dir?	What is the max landing slope?	Is the curb ramp flares slopes 10% or less?	Detectible warnings extend the full width of the curb ramp?	Is approx 75% of truncated domes in good condition?	Do the truncated domes contrast with adjacent surfaces?	Are there no gaps in elevation or distance between concrete panels >1.5"?	What is the overall condition of the curb ramp?	Notes	EditDate	# of Non Compliant	Compliant	Jurisdiction
788	1	1	5.6	1	.3	0	1	.6	0	0	0	0	1	Fair		6/25/2018	5	NO	Local
789	1	1	2.9	1	.5	1	1	.9	0	0	0	0	1	Fair		6/26/2018	4	NO	Local
790	1	1	4.1	1	0.8	0	1	1.5	1	0	0	0	0	Poor		6/26/2018	5	NO	Local
791	1	1	2.9	1	.5	1	1	1.3	1	1	1	1	1	Good	water valve in landing	6/26/2018	0	YES	Local
792	1	1	1.9	1	0.4	1	1	1.4	1	0	0	0	1	Fair		6/26/2018	3	NO	Local
793	1	1	3.3	1	1.0	1	0	2.8	1	0	0	0	1	Fair		6/26/2018	4	NO	Local
794	1	1	3.8	1	0.6	1	1	1.6	1	0	0	0	1	Fair		6/26/2018	3	NO	Local
795	1	1	4.3	1	0.3	1	1	1.5	1	0	0	0	1	Good		6/26/2018	3	NO	Local
796	1	1	1.6	1	.2	1	1	1.2	1	0	0	0	1	Fair		6/26/2018	3	NO	Local
797	1	1	5.9	1	0.1	1	1	0.4	1	0	0	0	1		1.5" or greater gap	6/26/2018	3	NO	Local
798	1	1	6.1	1	0.2	1	1	0.3	1	0	0	0	1	Good		6/26/2018	3	NO	Local
799	1	1	3.0	1	1.5	1	1	1.1	1	1	1	1	1	Good		6/26/2018	0	YES	Local
800	1	1	.3	1	.7	1	1	.8	1	1	1	1	1	Good		6/26/2018	0	YES	State
801	1	1	1.4	1	0.2	1	1	0.9	1	1	1	1	1	Good		6/26/2018	0	YES	State
802	1	1	4.8	1	0.0	1	0	2.1	1	1	1	1	1	Good		6/26/2018	1	NO	Local
803	1	1	0.1	1	0.3	1	1	0.7	1	1	1	1	1	Good		6/26/2018	0	YES	State
805	1	1	.5	1	.1	1	0	2.1	0	1	1	1	1	Good		6/26/2018	2	NO	State
806	1	1	4.3	1	0.0	1	1	1.0	1	1	1	1	1	Good		6/26/2018	0	YES	State
807	1	1	3.3	1	.2	1	1	.4	1	1	1	1	1	Good		6/26/2018	0	YES	State
808	1	1	3.9	1	0.4	1	1	0.8	1	1	1	1	1	Good		6/26/2018	0	YES	State
809	1	1	2.4	1	.2	1	1	1.0	1	1	1	1	1	Good		6/26/2018	0	YES	State
810	1	1	0.1	1	0.1	1	1	0.8	1	1	1	1	1	Good		6/26/2018	0	YES	State
811	1	1	0.1	1	0.1	1	1	0.8	1	1	1	1	1	Good		6/26/2018	0	YES	State
812	1	1	2.0	1	.8	1	1	.6	1	1	1	1	1	Good		6/26/2018	0	YES	State
813	1	1	4.5	1	.6	1	1	1	1	1	1	1	1	Good		6/26/2018	0	YES	State
814	1	1	2.9	1	.5	1	1	1.0	1	1	1	1	1	Good		6/26/2018	0	YES	State
815	1	1	3.1	1	0.1	1	1	1.6	1	1	1	1	1	Good		6/26/2018	0	YES	State
816	1	1	3.1	1	0.0	1	1	1.6	1	1	1	1	1	Good		6/26/2018	0	YES	State
817	1	1	4.4	1	0.2	1	1	0.5	1	1	1	1	1	Good		6/26/2018	0	YES	State
818	1	1	2.9	1	.5	1	1	.4	1	1	1	1	1	Good		6/26/2018	0	YES	State
821	1	1	0.1	1	0.5	1	1	0.9	1	1	1	1	1	Fair	The curb ramp is very dirty	6/26/2018	0	YES	State
822	1	1	4.2	1	.4	1	1	.9	1	1	1	1	1	Good		6/26/2018	0	YES	Local
823	1	1	2.8	1	0.5	1	1	0.4	1	1	1	1	1	Good		6/26/2018	0	YES	Local
824	1	1	2.3	1	.2	1	1	.7	1	1	1	1	1	Good	water valve	6/26/2018	0	YES	Local
825	1	1	4.2	1	1.0	1	1	1.5	1	1	1	1	1	Good		6/26/2018	0	YES	Local
826	1	1	.7	1	.6	1	1	.7	0	1	1	1	1	Good		6/26/2018	1	NO	Local
827	1	1	4.9	1	0.1	1	0	2.1	1	0	1	1	0	Good		6/26/2018	3	NO	Local
828	1	1	4.1	1	0.1	1	1	1.8	1	0	1	1	0	Good		6/26/2018	2	NO	Local
829	1	1	3.0	1	1.4	1	1	.8	1	0	1	1	1	Good		6/26/2018	1	NO	Local
830	1	1	3.2	1	1.0	1	1	1.3	0	1	1	1	1	Good		6/26/2018	1	NO	Local
831	1	1	1.3	1	.9	1	1	.7	0	1	1	1	1	Good		6/26/2018	1	NO	Local
832	1	1	1.5	1	1.3	1	0	1.0	0	0	1	1	1	Good		6/26/2018	3	NO	Local
833	1	1	2.6	1	0.8	1	1	1.0	1	1	1	1	1	Good		6/26/2018	0	YES	Local
834	1	1	.5	1	.8	1	1	1.2	0	1	1	1	1	Good		6/26/2018	1	NO	Local
835	1	1	1.7	1	0.4	1	1	1.3	1	1	1	1	1	Good		6/26/2018	0	YES	Local
836	1	1	1.9	1	.4	1	1	.9	0	1	1	1	1	Good		6/26/2018	1	NO	Local
837	1	1	1.9	1	0.1	1	1	1.5	1	1	1	1	1	Good		6/26/2018	0	YES	Local
838	1	1	.8	1	1.2	1	1	no landing	1	1	1	1	1	Good		6/26/2018	0	YES	Local
839	1	1	4.5	1	0.1	1	1	1.1	1	1	1	1	0	Good	Water gate valve sticking up in sidewalk.	6/26/2018	1	NO	Local
840	1	1	2.6	1	1.3	1	1	2.5	1	0	1	1	1	Good		6/26/2018	1	NO	State
841	1	1	0.3	1	1.4	1	1	1.1	1	1	1	1	1	Good		6/26/2018	0	YES	Local
842	1	1	2.1	1	0.9	1	1	0.7	1	1	1	1	0	Good		6/26/2018	1	NO	Local
843	1	1	1.9	1	1.9	1	1	1.9	0	0	1	1	1	Good		6/26/2018	2	NO	State
844	1	1	1.5	1	1.8	1	0	2.2	1	0	1	1	1	Good		6/26/2018	2	NO	State
845	1	1	2.0	1	2.0	1	1	2.2	0	0	1	1	1	Good		6/26/2018	2	NO	State
846	1	1	6.4	0	2.5	1	0	6.0	0	0	1	1	1	Good		6/26/2018	4	NO	Local
847	1	1	3.0	1	1.6	1	1	1.5	1	1	1	1	0	Good		6/26/2018	1	NO	Local
848	1	1	0.3	1	0.7	1	1	1.9	1	1	1	1	1	Fair	Very dirty	6/26/2018	0	YES	Local
849	1	1	2.7	1	0.8	1	1	1.9	1	1	1	1	1	Fair	Very dirty	6/26/2018	0	YES	Local
850	1	1	9.3	1	1.1	1	0	3.4	1	1	1	1	1	Fair	little lip	6/26/2018	1	NO	Local
851	1	1	1.0	1	0.4	1	1	1.5	1	1	1	1	1	Good		6/26/2018	0	YES	Local
852	1	1	1.7	1	0.9	1	1	1.4	1	1	1	1	1	Good		6/26/2018	0	YES	Local

OBJECTID	If walk/trail crosses curb, is there a curb ramp?	Is the Running slope 8.3% or less?	What is the running slope of the curb ramp?	Is the cross slope 2% or less?	What is the cross slope of the curb ramp?	Is the curb ramp width 48" or wider?	Is the Landing 48in sq or more with cross slope 2% or less any dir?	What is the max landing slope?	Is the curb ramp flares slopes 10% or less?	Detectible warnings extend the full width of the curb ramp?	Is approx 75% of truncated domes in good condition?	Do the truncated domes contrast with adjacent surfaces?	Are there no gaps in elevation or distance between concrete panels >1.5"?	What is the overall condition of the curb ramp?	Notes	EditDate	# of Non Compliant	Compliant	Jurisdiction
853	1	1	9.9	1	.2	1	0	4.6	1	1	1	1	1	Good		6/26/2018	1	NO	Local
854	1	1	3.2	1	0.4	1	1	1.3	1	0	1	1	1	Good		6/26/2018	1	NO	Local
855	1	1	0.5	1	1.2	1	1	1.3	1	1	1	1	1	Fair	A chunk of the truncated domes has been sheared off.	6/26/2018	0	YES	Local
856	1	1	0.5	0	2.1	1	1	1.6	1	0	1	1	0	Fair		6/26/2018	3	NO	Local
857	1	1	1.0	0	4.0	1	0	3.7	0	0	1	1	1	Good		6/26/2018	4	NO	Local
858	1	1	4.8	0	3.5	1	0	2.7	0	1	1	1	1	Fair		6/26/2018	3	NO	Local
859	1	1	.7	1	.1	1	1	1.7	0	1	1	1	1	Good		6/26/2018	1	NO	Local
860	1	1	3.6	1	.9	0	1	.8	0	0	0	0	1	Fair		6/26/2018	5	NO	Local
861	1	0	13.3	1	1.1	1	0	2.1	1	0	0	0	0	Fair		6/26/2018	6	NO	Local
863	1	0	9.2	0	6.7	1	0	4.3	1	0	0	0	1	Fair		6/26/2018	6	NO	Local
864	1	1	.7	1	2.0	1	1	1.5	0	0	0	0	1	Fair		6/26/2018	4	NO	Local
865	1	0	9.7	0	3.9	1	0	4.2	1	0	0	0	1	Fair		6/26/2018	6	NO	Local
866	1	1	5.8	0	2.9	1	0	2.1	1	0	0	0	1	Fair		6/26/2018	5	NO	Local
867	1	1	.7	1	.3	1	1	.4	1	1	1	1	1	Good		6/26/2018	0	YES	Local
868	1	1	2.2	1	0.4	1	1	0.4	1	1	1	1	1	Good		6/26/2018	0	YES	Local
869	1	1	1.2	1	.8	1	1	.3	1	1	1	1	1	Good		6/26/2018	0	YES	State
870	1	1	0.8	1	0.1	1	1	0.3	1	1	1	1	1	Good		6/26/2018	0	YES	State
871	1	1	3.1	1	0.5	1	1	2.4	1	1	1	1	1	Good		6/26/2018	0	YES	Local
872	1	1	3.2	1	.2	1	1	1.8	1	1	1	1	1	Good	water valve	6/28/2018	0	YES	Local
873	0	0		0		0	0		0	0	0	0	0		1.5" gap or greater in elevation by the sidewalk.	6/28/2018	10	NO	Local
874	1	1	4.7	1	.1	1	1	1.5	0	1	1	1	1	Good		6/28/2018	1	NO	Local
875	1	0	9.2	0	2.2	1	0	3.3	0	0	1	1	1	Good		6/28/2018	5	NO	Local
876	1	1	4.1	0	.1	1	1	.9	1	1	1	1	1	Good		6/28/2018	1	NO	Local
877	1	1	4.7	1	.2	1	0	2.1	0	0	1	1	1	Good		6/28/2018	3	NO	Local
878	1	1	7.3	1	.5	1	0	.8	0	0	1	1	1	Good		6/28/2018	3	NO	Local
879	1	1	5.2	1	0	1	1	1.9	0	0	1	1	1	Good		6/28/2018	2	NO	Local
880	0	0		0		0	0		0	0	0	0	0			6/28/2018	10	NO	Local
881	1	1	4.8	1	.9	1	1	1.9	0	1	1	1	1	Good		6/28/2018	1	NO	Local
882	1	1	6.5	1	1.7	1	0	2.4	1	1	1	1	1	Good		6/28/2018	1	NO	Local
883	1	0	9.2	1	.4	0	0	2.1	0	0	0	0	1	Fair		6/28/2018	7	NO	Local
885	1	0	15.2	0	3.0	0	0	3.1	0	0	0	0	1	Fair		6/28/2018	8	NO	Local
886	1	1	5.6	1	1.4	1	1	1.4	1	0	1	1	1	Good		6/28/2018	1	NO	Local
888	1	1	7.9	1	.1	1	1	1.1	0	0	0	0	1	Fair		6/28/2018	4	NO	Local
889	1	1	5.1	1	1.9	1	0	2.1	0	0	1	1	1	Good		6/28/2018	3	NO	Local
890	1	1	6.2	1	1.2	1	1	1.4	0	1	1	1	1	Good	a little dip by the curb	6/28/2018	1	NO	Local
891	1	1	3.2	1	.2	1	1	.6	1	0	1	1	1	Good		6/28/2018	1	NO	Local
892	1	1	3.2	1	0.2	1	1	1.0	1	0	1	1	1	Good		6/29/2018	1	NO	Local
893	1	1	.3	1	.3	1	1	1.7	1	1	1	1	1	Good		6/29/2018	0	YES	Local
894	1	1	2.5	1	0.4	1	1	1.2	1	0	1	1	1	Good		6/29/2018	1	NO	Local
895	1	1	2.3	1	.3	1	1	1.0	1	1	1	1	1	Good		6/29/2018	0	YES	Local
896	1	1	1.9	1	0.3	1	1	1.6	1	0	1	1	1	Good		6/29/2018	1	NO	Local
897	1	1	2.6	1	.4	1	1	1.6	1	1	1	1	1	Good		6/29/2018	0	YES	Local
898	1	1	1.9	1	.5	1	1	1.6	1	1	1	1	1	Good		6/29/2018	0	YES	Local
899	1	1	4.9	1	0.6	1	1		1	0	1	1	1	Good	1.6	6/29/2018	1	NO	Local
900	1	1	2.8	1	0.0	1	1	1.6	1	0	1	1	1	Good		6/29/2018	1	NO	Local
901	1	1	3.1	1	0.3	1	1	1.9	1	0	1	1	1	Good		6/29/2018	1	NO	Local
903	1	1	3.1	1	.3	1	1	1.1	1	1	1	1	1	Good		6/29/2018	0	YES	Local
904	1	1	3.7	1	0.3	1	1		1	0	1	1	1	Good	1.2	6/29/2018	1	NO	Local
905	1	1	2.3	1	.6	1	1	1.5	1	1	1	1	1	Good		6/29/2018	0	YES	Local
906	1	1	1.5	1	.4	1	0	na	0	1	1	1	1	Good	no landing	6/29/2018	2	NO	State
907	1	1	1.8	1	.1	1	0	2.2	1	0	0	0	1	Fair		6/29/2018	4	NO	Local
908	1	1	3.4	1	0.8	1	1	2.1	1	0	0	0	1	Fair		6/29/2018	3	NO	Local
909	1	1	3.3	1	.3	1	1	1.5	1	0	1	1	1	Good		6/29/2018	1	NO	Local
910	1	1	0.7	1	0.3	1	1	0.5	1	0	0	0	1	Good		6/29/2018	3	NO	Local
911	1	1	4.4	1	.9	0	1	1.9	1	0	0	0	1	Fair		6/29/2018	4	NO	Local
912	1	1	3.9	1	0.3	1	1	0.3	1	0	0	0	1	Good		6/29/2018	3	NO	Local
913	1	1	2.8	1	.7	1	1	.8	0	0	0	0	1	Fair		6/29/2018	4	NO	Local
914	1	1	1.7	1	.5	1	1	1.3	1	1	1	1	1	Good		6/29/2018	0	YES	Local
915	1	1	2.0	1	1.1	1	1	0.7	1	1	1	1	1	Good		6/29/2018	0	YES	Local
916	1	1	3.3	1	0.3	1	1	1.3	1	1	1	1	1	Good		6/29/2018	0	YES	Local
917	1	1	2.9	1	0.0	1	1	1.4	1	1	1	1	1	Good		6/29/2018	0	YES	Local

OBJECTID	If walk/trail crosses curb, is there a curb ramp?	Is the Running slope 8.3% or less?	What is the running slope of the curb ramp?	Is the cross slope 2% or less?	What is the cross slope of the curb ramp?	Is the curb ramp width 48" or wider?	Is the Landing 48in sq or more with cross slope 2% or less any dir?	What is the max landing slope?	Is the curb ramp flares slopes 10% or less?	Detectible warnings extend the full width of the curb ramp?	Is approx 75% of truncated domes in good condition?	Do the truncated domes contrast with adjacent surfaces?	Are there no gaps in elevation or distance between concrete panels >1.5"?	What is the overall condition of the curb ramp?	Notes	EditDate	# of Non Compliant	Compliant	Jurisdiction
918	1	1	1.5	1	0.4	1	1	1.8	1	1	1	1	1	Good		6/29/2018	0	YES	Local
919	1	1	3.6	1	.5	1	1	.9	0	1	1	1	1	Good		6/29/2018	1	NO	Local
920	1	1	1.6	1	1.4	1	1	0.8	1	1	1	1	1	Good		6/29/2018	0	YES	Local
921	1	1	1.8	1	0.3	1	1	1.9	1	1	1	1	1	Good		6/29/2018	0	YES	Local
922	1	1	2.0	1	1.4	1	1	1.9	1	1	1	1	1	Good		6/29/2018	0	YES	Local
923	1	1	3.1	1	1.3	1	1	1.0	1	1	1	1	1	Good		6/29/2018	0	YES	Local
924	1	1	0.7	1	0.5	1	1	0.4	1	0	1	1	0	Good		6/29/2018	2	NO	Local
925	1	1	2.5	1	0.3	1	1	0.5	1	1	1	1	1	Good		6/29/2018	0	YES	Local
926	1	1	4.0	1	.8	1	1	1.1	1	0	0	0	1	Fair		6/29/2018	3	NO	Local
927	1	1	3.2	1	1.2	0	1	1.2	1	0	0	0	1	Fair		6/29/2018	4	NO	Local
928	1	1	2.9	1	.2	1	1	.6	0	0	0	0	1	Fair		6/29/2018	4	NO	Local
929	1	1	5.0	1	.9	1	1	1.2	0	0	1	1	1	Good		6/29/2018	2	NO	Local
930	1	1	.9	1	1.0	1	1	.3	0	0	0	1	1	Good		6/29/2018	3	NO	Local
931	1	1	3.0	1	1.1	1	1	.2	1	0	0	1	1	Good		6/29/2018	2	NO	Local
932	1	1	1.9	0	2.4	1	1	1.8	0	0	0	1	1	Good		6/29/2018	4	NO	Local
933	1	1	1.9	0	2.1	1	1	1.3	1	0	1	1	1	Good		6/29/2018	2	NO	Local
934	1	1	1.2	1	.5	1	1	.8	1	0	1	1	1	Good		6/29/2018	1	NO	Local
935	1	1	3.3	1	1.0	1	1	.9	1	0	1	1	1	Good		6/29/2018	1	NO	Local
936	1	1	1.9	1	.5	1	0	3.0	1	0	0	0	1	Fair		6/29/2018	4	NO	Local
937	1	1	3.5	1	.3	1	1	.7	0	0	0	0	1	Fair		6/29/2018	4	NO	Local
938	1	1	1.7	0	3.0	1	0	2.8	1	0	1	1	1	Good		6/29/2018	3	NO	Local
939	1	1	1.2	1	0.1	1	1	0.5	1	0	1	1	1	Good		6/29/2018	1	NO	Local
940	1	1	1.0	1	0.1	1	1	0.5	1	0	1	1	1	Good		6/29/2018	1	NO	Local
941	1	1	1.3	1	.7	1	1	1.6	0	1	1	1	1	Good		6/29/2018	1	NO	Local
942	1	1	2.0	1	0.2	1	1	1.8	0	1	1	1	1	Good		6/29/2018	1	NO	Local
943	1	1	0.8	1	0.1	1	0	2.2	0	1	1	1	1	Good	water valve in det panels	6/29/2018	2	NO	Local
944	1	1	2.6	1	.1	1	1	2.1	1	0	0	0	1	Fair		7/2/2018	3	NO	Local
945	1	1	2.3	1	.3	1	1	.9	1	1	1	1	1	Good		7/2/2018	0	YES	Local
946	1	1	3.6	1	.1	1	1	.6	1	0	0	0	1	Fair		7/2/2018	3	NO	Local
947	1	1	.9	0	2.3	1	1	.2	1	0	0	0	1	Fair		7/2/2018	4	NO	Local
948	1	1	3.3	1	1.4	1	0	5.7	1	0	0	0	1	Fair	The truncated domes have been scrapped away or removed.	7/2/2018	4	NO	Local
949	1	1	4.6	1	.3	1	1	.7	1	0	0	0	1	Fair		7/2/2018	3	NO	Local
950	1	1	.5	1	1.5	1	0	3.6	0	0	0	0	1	Fair		7/2/2018	5	NO	Local
951	1	1	1.5	1	1.1	1	0	3.4	1	0	1	1	1	Good		7/2/2018	2	NO	Local
952	1	1	3.8	1	1.9	1	0	2.1	1	0	1	1	1	Good		7/2/2018	2	NO	Local
953	1	1	.8	1	.7	1	1	.6	1	0	1	1	1	Good		7/2/2018	1	NO	Local
954	1	1	3.9	1	1.4	1	1		1	0	1	1	1	Good		7/2/2018	1	NO	Local
955	1	1	1.3	1	.3	1	1	1.0	0	0	0	0	1	Fair		7/2/2018	4	NO	Local
956	1	1	2.0	1	.1	1	1	1.0	1	0	0	0	1	Fair		7/2/2018	3	NO	Local
957	1	1	1.5	1	1.1	1	1	.7	1	0	0	0	1	Fair		7/2/2018	3	NO	Local
958	1	1	1.9	1	1.6	1	0	4.1	1	0	0	0	1	Fair		7/2/2018	4	NO	Local
959	1	1	4.4	0	2.5	1	1	.5	1	0	0	0	1	Fair		7/2/2018	4	NO	Local
960	1	1	.5	1	1.9	1	1	1.7	1	0	0	0	1	Fair		7/2/2018	3	NO	Local
961	1	1	.8	1	1.1	1	1	1.2	1	0	0	0	1	Fair		7/2/2018	3	NO	Local
962	1	1	1.2	1	1.2	1	1	1.6	0	0	0	0	1	Fair		7/2/2018	4	NO	Local
963	1	1	.9	1	.9	1	1	1.3	1	0	0	0	1	Fair		7/2/2018	3	NO	Local
964	1	1	2.2	1	1.8	1	1	1.5	0	0	0	0	1	Fair		7/2/2018	4	NO	Local
965	1	1	1.1	1	0.8	1	1	2.1	1	0	0	0	1	Fair		7/2/2018	3	NO	Local
966	1	1	5.9	0	4.2	1	1	1.5	0	0	0	0	1	Fair		7/2/2018	5	NO	Local
967	1	1	1.0	1	1.6	1	1	0.5	1	0	0	0	1	Fair		7/2/2018	3	NO	Local
968	1	1	4.4	1	.5	1	0	3.0	1	0	0	0	1	Fair		7/2/2018	4	NO	Local
969	1	1	1.8	1	.9	1	1	1.0	1	0	0	0	1	Poor	a lot of cracking, circle holes in trail	7/2/2018	3	NO	Local
970	1	1	6.7	1	0.5	1	0	3.5	1	0	0	0	1	Fair		7/2/2018	4	NO	Local
971	1	1	.4	0	3.1	1	1	.7	0	0	0	0	1	Fair		7/2/2018	5	NO	Local
972	1	1	.8	0	3.3	1	1	1.5	0	0	0	0	1	Fair		7/2/2018	5	NO	Local
973	1	1	3.2	1	1.7	1	1	1.2	1	0	0	0	1	Fair		7/2/2018	3	NO	Local
975	1	1	.4	1	.5	1	1	.7	0	0	0	0	1	Fair		7/2/2018	4	NO	Local
976	1	1	1.3	1	.1	1	1	.8	0	0	0	0	1	Fair		7/2/2018	4	NO	Local
977	1	1	.3	1	1.6	1	1	1.3	0	0	0	0	1	Fair		7/2/2018	4	NO	Local
978	1	1	4.1	1	.5	1	1	1.1	1	0	0	0	1	Fair		7/2/2018	3	NO	Local
979	1	1	.4	1	.6	1	1	1.8	0	0	0	0	1	Fair		7/2/2018	4	NO	Local

OBJECTID	If walk/trail crosses curb, is there a curb ramp?	Is the Running slope 8.3% or less?	What is the running slope of the curb ramp?	Is the cross slope 2% or less?	What is the cross slope of the curb ramp?	Is the curb ramp width 48" or wider?	Is the Landing 48in sq or more with cross slope 2% or less any dir?	What is the max landing slope?	Is the curb ramp flares slopes 10% or less?	Detectible warnings extend the full width of the curb ramp?	Is approx 75% of truncated domes in good condition?	Do the truncated domes contrast with adjacent surfaces?	Are there no gaps in elevation or distance between concrete panels >1.5"?	What is the overall condition of the curb ramp?	Notes	EditDate	# of Non Compliant	Compliant	Jurisdiction
980	1	1	3.9	1	.1	1	1	.7	0	0	0	0	1	Fair		7/2/2018	4	NO	Local
981	1	1	2.5	1	1.1	1	1	1.2	1	0	0	0	1	Fair		7/2/2018	3	NO	Local
982	1	1	2.3	1	1.0	1	1	1.6	1	0	0	0	1	Fair		7/2/2018	3	NO	Local
983	1	1	1.2	1	1.9	1	0	2.3	1	0	0	0	1	Fair		7/2/2018	4	NO	Local
984	1	1	.8	1	1.8	1	1	1.5	0	0	0	0	1	Fair		7/2/2018	4	NO	Local
985	1	1	1.0	1	0.4	1	0	2.1	1	0	0	0	1	Good		7/2/2018	4	NO	Local
986	1	1	0.4	1	0.7	1	1	1.2	1	0	0	0	1	Good		7/2/2018	3	NO	Local
987	1	1	3.7	1	1.8	1	1	1.5	1	0	0	0	1	Fair	bump after concrete portion, foundation concrete in middle by landing	7/2/2018	3	NO	Local
988	1	1	2.2	1	.6	1	1	1.6	1	0	0	0	1	Fair		7/2/2018	3	NO	Local
989	1	1	3.4	1	.5	1	1	1.3	0	0	1	1	1	Good		7/2/2018	2	NO	Local
990	1	1	3.9	1	0.4	1	1	1.5	1	0	1	1	1	Good		7/2/2018	1	NO	Local

TOTAL:	937
# Compliant:	158
% Compliant:	17%

OBJECTID	Is the route stable, firm and slip-resistant?	Is the route at least 48in wide?	If the sidewalk is 200ft or more by 60in of less, is there a 60 in by 60in passing space?	If there are grates or openings are the openings 0.5 in or less?	Is the long dimension of grate opening perpendicular to the direction of travel?	Is the Running slope 5.0% or less?	Is the cross slope	Are there no gaps in elevation or distance between concrete panels >1.5"?	What is the overall condition of the sidewalk?	Notes	EditDate	# Non Compliant	Compliant	Jurisdiction
3	1	1	0	N/A	N/A	1	1	1	Fair	vault in sidewalk with gap over 1.5"	6/25/2018	1	NO	Local
4	1	1	0	N/A	N/A	1	1	0	Good	grass growing in cracks of sidewalk	6/25/2018	2	NO	Local
5	1	1	0	N/A	N/A	1	0	1	Poor	uphevel in a lot of area amd grass. nothing greater than 1.5".	6/25/2018	2	NO	Local
6	1	1	0	N/A	N/A	1	0	0	Poor	bushes over hanging and large gap	6/25/2018	3	NO	Local
7	1	1	0	N/A	N/A	1	1	0	Fair	There is a lot of vegetation growth in the sidewalk cracks. There is tree & bush overhang in walking	6/25/2018	2	NO	Local
8	1	1	1	N/A	N/A	1	1	1	Poor	a lot of grass and uphevel. nothing greater than 1.5"	6/25/2018	0	YES	Local
9	1	1	0	N/A	N/A	1	1	0	Fair	There is a lot of vegetation growth in the cracks of the sidewalk. Bush overhang	6/25/2018	2	NO	Local
10	1	0	0	N/A	N/A	1	1	1	Good	good condition just narrow	6/25/2018	2	NO	Local
11	1	1	0	N/A	N/A	1	1	0	Poor	grass growing in sidewalk, post kind of sticking up and not very level.	6/25/2018	2	NO	Local
12	1	0	1	N/A	N/A	1	1	1	Fair		6/25/2018	1	NO	Local
13	1	1	1	N/A	N/A	1	1	1	Fair	about 1" gap just south of tracks	6/25/2018	0	YES	Local
14	1	1	1	N/A	N/A	1	0	1	Fair	low spots that kind of dip in center	6/25/2018	1	NO	Local
15	1	1	0	N/A	N/A	1	1	0	Fair	Missing pieces of concrete in the sidewalk. Tree overhang. 1.5" elevation change.	6/25/2018	2	NO	Local
16	1	1	0	N/A	N/A	1	1	0	Good	Sidewalk shifts a little bit. Bush overhang onto sidewalk	6/25/2018	2	NO	Local
17	1	1	0	N/A	N/A	1	0	0	Poor	1.5% gap, cracking, grass,	6/25/2018	3	NO	Local
18	1	1	0	N/A	N/A	1	1	1	Fair	sidewalk good, trees are in the way	6/25/2018	1	NO	Local
19	1	1	0	N/A	N/A	1	1	0	Good	cracks but no major hazards	6/25/2018	2	NO	Local
20	1	1	0	N/A	N/A	1	1	1	Fair	worn down concrete for bumpy surface	6/25/2018	1	NO	Local
21	1	0	1	N/A	N/A	1	0	0	Poor	Vegetation growing in cracks. Broken Concrete. Tree overhang. 1.5" gap in elevation.	6/25/2018	3	NO	Local
22	1	1	1	N/A	N/A	1	0	1	Fair	one panel that is cracked horribly, rest isnt too bad	6/25/2018	1	NO	Local
23	1	1	1	N/A	N/A	1	1	0	Fair	The sidewalk on this stretch is in good condition except for this location. Gap in sidewalk.	6/25/2018	1	NO	Local
24	1	1	1	N/A	N/A	1	0	0	Poor	there are a few 1.5" gaps, along with a dirt sidewalk location. high spots in center of sidewalk	6/25/2018	2	NO	Local
25	1	1	1	N/A	N/A	1	1	0	Fair	Gaps in the concrete. Vegetation growth in cracks.	6/25/2018	1	NO	Local
26	1	1	1	N/A	N/A	1	1	1	Fair	Vegetation in cracks of sidewalk	6/25/2018	0	YES	Local
27	1	1	1	N/A	N/A	1	1	0	Poor	lots of grass, cracking, drop off locations	6/25/2018	1	NO	Local
28	1	1	2	N/A	N/A	1	1	1	Good		6/25/2018	0	YES	Local
29	1	1	1	N/A	N/A	1	1	0	Fair	1.5" gap	6/25/2018	1	NO	Local
30	1	1	1	N/A	N/A	1	1	0	Poor	Vegetation growth in the cracks of the sidewalk.	6/25/2018	1	NO	Local
31	1	1	0	N/A	N/A	1	1	1	Fair	low trees and bushes in walk way	6/25/2018	1	NO	Local
32	1	1	0	N/A	N/A	1	1	1	Fair	stretch that has a lot of grass growing over it	6/25/2018	1	NO	Local
33	1	1	1	N/A	N/A	1	1	0		1.5" or larger gaps in sidewalk. Vegetation growth in cracks of sidewalk	6/25/2018	1	NO	Local
34	1	1	0	N/A	N/A	1	0	0	Fair	Sidewalk heaved up. 1.5" or greater gap in elevation.	6/25/2018	3	NO	Local
35	1	1	0	N/A	N/A	0	1	0	Fair	Vegetation in the cracks of the sidewalk. 1.5" or greater gap in elevation	6/25/2018	3	NO	Local
36	1	1	0	N/A	N/A	1	1	1	Good	little cracking otherwise good	6/25/2018	1	NO	Local
38	1	1	0	N/A	N/A	1	1	0	Fair	minor cracking but nothing major, some wearing towards end of blovk	6/25/2018	2	NO	Local
39	1	1	0	N/A	N/A	1	0	1	Fair	Tree roots heaved up sidewalk. Vegetation growth in cracks of the sidewalk.	6/25/2018	2	NO	Local
40	1	1	0	N/A	N/A	1	1	1	Good		6/25/2018	1	NO	Local
41	1	1	0	N/A	N/A	1	0	1	Fair	Vegetation growth in the cracks of the sidewalk. Tree overhang on sidewalk.	6/25/2018	2	NO	Local
42	1	1	0	N/A	N/A	1	1	1	Fair	Vegetation growth in the cracks of the sidewalk.	6/25/2018	1	NO	Local
43	1	1	0	N/A	N/A	1	1	1	Good	sidewalk good. small bush needs trimming	6/25/2018	1	NO	Local
44	1	1	0	N/A	N/A	1	1	1	Fair	cracking, grass, trim bush	6/25/2018	1	NO	Local

OBJECTID	Is the route stable, firm and slip-resistant?	Is the route at least 48in wide?	If the sidewalk is 200ft or more by 60in of less, is there a 60 in by 60in passing space?	If there are grates or openings are the openings 0.5 in or less?	Is the long dimension of grate opening perpendicular to the direction of travel?	Is the Running slope 5.0% or less?	Is the cross slope	Are there no gaps in elevation or distance between concrete panels >1.5"?	What is the overall condition of the sidewalk?	Notes	EditDate	# Non Compliant	Compliant	Jurisdiction
45	1	1	0	N/A	N/A	1	1	0	Fair	Vegetation growth in the cracks of the sidewalk.	6/25/2018	2	NO	Local
46	1	1	0	N/A	N/A	1	0	1	Fair	cracking a few gaps but less than 1"	6/25/2018	2	NO	Local
47	1	1	0	N/A	N/A	1	1	0	Poor	Vegetation growth in the cracks of the sidewalk. 1.5" or greater gaps. Sidewalk deteriorating.	6/25/2018	2	NO	Local
48	1	1	0	N/A	N/A	1	0	1	Fair	some parts of sidewalk look newer, some older where it has high point in middle	6/25/2018	2	NO	Local
49	1	1	0	N/A	N/A	1	1	1	Good	New sidewalk	6/25/2018	1	NO	Local
50	1	1	0	N/A	N/A	0	1	0	Fair	a new and slightly wider portion, some with grass and slight high pt, concrete wearing	6/25/2018	3	NO	Local
51	1	1	0	N/A	N/A	1	1	1	Fair	Vegetation growth in the cracks of the sidewalk. Bush overhang onto sidewalk.	6/25/2018	1	NO	Local
52	1	1	0	N/A	N/A	1	1	1	Fair	Vegetation growth in the cracks of the sidewalk. Brush overhang onto sidewalk.	6/25/2018	1	NO	Local
53	1	1	0	N/A	N/A	1	1	1	Fair	Sidewalk has a lot of cracks in the pavement. Some brush overhang onto sidewalk.	6/25/2018	1	NO	Local
54	1	1	0	N/A	N/A	1	1	0	Fair	Vegetation growth in the cracks of the sidewalk. 1.5" or greater gap in sidewalk crack.	6/25/2018	2	NO	Local
55	1	1	0	N/A	N/A	1	0	0	Poor	a lot of cracks, some woren concrete, upheaving in specificareas. large gap	6/25/2018	3	NO	Local
56	1	1	0	N/A	N/A	1	1	0	Fair	portion where grass is taking over, small cracks minor gal	6/25/2018	2	NO	Local
57	1	1	0	N/A	N/A	1	1	0	Fair	Vegetation growth in the cracks of the sidewalk. Bush and tree overhang onto sidewalk.	6/25/2018	2	NO	Local
58	1	1	N/A	N/A	N/A	1	1	1	Good	minor cracking, little grass	6/25/2018	0	YES	Local
59	1	1	1	N/A	N/A	1	1	1	Fair	Vegetation growth in the cracks of the sidewalk.	6/25/2018	0	YES	Local
60	1	1	0	N/A	N/A	1	0	0	Poor	a couple gaps greater than 1.5" in sinilar panels major cracking, qearing along whole stretch	6/25/2018	3	NO	Local
61	1	1	0	N/A	N/A	1	1	1	Fair		6/25/2018	1	NO	Local
62	1	1	0	N/A	N/A	1	1	0	Fair	Vegetation growth in the cracks of the sidewalk. 1.5" or greater gap.	6/25/2018	2	NO	Local
63	1	1	N/A	N/A	N/A	1	1	1	Good	most are new panels, old panels and meeting points look good.	6/25/2018	0	YES	Local
64	1	1	N/A	N/A	N/A	1	1	1	Good	most of it new, old panels and connection point are good	6/25/2018	0	YES	Local
65	1	1	0	N/A	N/A	1	1	0	Fair	Vegetation growth in the cracks of the sidewalk. 1.5" or greater gap in elevation.	6/25/2018	2	NO	Local
66	1	1	0	N/A	N/A	1	1	1	Good	a lot of spot repairs done, slight gapping on a few panels but about 1 inch	6/25/2018	1	NO	Local
67	1	1	0	N/A	N/A	1	1	1	Good	spot repairs, some grass and cracking in old locations	6/25/2018	1	NO	Local
68	1	1	0	N/A	N/A	1	1	0	Fair	1.5" or greater gap	6/25/2018	2	NO	Local
69	1	1	0	N/A	N/A	1	1	1	Fair	quite a bit of longitudinal cracking, weared concrete	6/25/2018	1	NO	Local
70	1	1	0	N/A	N/A	1	1	0	Fair	a lot of grass, 2 panels with big gap	6/25/2018	2	NO	Local
71	1	1	0	N/A	N/A	1	0	1	Poor	Vegetation growth in the cracks of the sidewalk.	6/25/2018	2	NO	Local
72	1	1	0	N/A	N/A	1	1	1	Fair	longitudinal cracking	6/25/2018	1	NO	Local
73	1	1	0	N/A	N/A	1	0	1			6/25/2018	2	NO	Local
74	1	1	0	N/A	N/A	1	1	1	Fair	Sidewalk is not complete. Tree overhang onto sidewalk.	6/25/2018	1	NO	Local
75	1	1	0	N/A	N/A	1	1	0	Fair	longitudinal cracking, grass and unlevel	6/25/2018	2	NO	Local
76	1	1	0	N/A	N/A	1	0	0	Fair	1.5" or greater gap in elevation	6/25/2018	3	NO	Local
77	1	1	0	N/A	N/A	1	1	0	Poor	a lot of cracking, grass and somw upheaving	6/25/2018	2	NO	Local
78	1	1	0	N/A	N/A	1	1	1	Good	cracking on 2 or 3 panels	6/25/2018	1	NO	Local
79	1	1	0	N/A	N/A	1	1	1	Fair	Vegetation growth in the cracks of the sidewalk.	6/25/2018	1	NO	Local
80	1	1	0	N/A	N/A	1	1	1			6/25/2018	1	NO	Local
81	1	1	0	N/A	N/A	1	0	1	Good		6/25/2018	2	NO	Local
82	1	1	0	N/A	N/A	1	1	0	Good	1.5" or greater gap in elevation	6/25/2018	2	NO	Local
83	1	1	0	N/A	N/A	1	1	1	Good		6/25/2018	1	NO	Local

OBJECTID	Is the route stable, firm and slip-resistant?	Is the route at least 48in wide?	If the sidewalk is 200ft or more by 60in of less, is there a 60 in by 60in passing space?	If there are grates or openings are the openings 0.5 in or less?	Is the long dimension of grate opening perpendicular to the direction of travel?	Is the Running slope 5.0% or less?	Is the cross slope	Are there no gaps in elevation or distance between concrete panels >1.5"?	What is the overall condition of the sidewalk?	Notes	EditDate	# Non Compliant	Compliant	Jurisdiction
84	1	1	N/A	N/A	N/A	1	1	0	Good		6/25/2018	1	NO	Local
85	1	1	0	N/A	N/A	1	1	1	Fair	Vegetation growth in the cracks of the sidewalk.	6/25/2018	1	NO	Local
86	1	1	0	N/A	N/A	1	0	1	Fair	larger cracks with small gaps	6/25/2018	2	NO	Local
88	1	1	0	N/A	N/A	1	1	1	Good		6/25/2018	1	NO	Local
89	1	1	N/A	N/A	N/A	1	0	0	Fair	3/4" gap, cracking, grass	6/25/2018	2	NO	Local
90	1	1	0	N/A	N/A	1	1	1	Good		6/25/2018	1	NO	Local
91	1	1	0	N/A	N/A	1	0	1	Fair	long cracking, some broken concrete, gaps	6/25/2018	2	NO	Local
92	1	1	0	N/A	N/A	1	1	1	Fair	A lot of cracks in the sidewalk. 1.5" or greater gap in elevation	6/25/2018	1	NO	Local
93	1	1	0	N/A	N/A	1	0	0	Poor	1in gap, cracking	6/25/2018	3	NO	Local
94	1	1	0	N/A	N/A	1	1	1	Good		6/25/2018	1	NO	Local
95	1	1	N/A	N/A	N/A	1	0	0	Poor	1.5" gap, upheaving	6/25/2018	2	NO	Local
96	1	1	0	N/A	N/A	1	0	1	Fair	long cracking, grass	6/25/2018	2	NO	Local
97	1	1	0	N/A	N/A	1	1	1	Good	Tree overhang onto sidewalk.	6/25/2018	1	NO	Local
98	1	1	0	N/A	N/A	1	1	1	Good		6/25/2018	1	NO	Local
99	1	1	N/A	N/A	N/A	1	1	1	Poor	lots of cracking, grass and gaps	6/25/2018	0	YES	Local
100	1	1	0	N/A	N/A	1	1	1	Fair	Vegetation growth in the cracks of the sidewalk.	6/25/2018	1	NO	Local
101	1	1	0	N/A	N/A	1	1	1	Good	minor cracking and grass	6/25/2018	1	NO	Local
102	1	1	0	N/A	N/A	1	1	1	Good	some bushes in way	6/25/2018	1	NO	Local
103	1	1	1	N/A	N/A	1	1	1	Fair	Vegetation growth in the cracks of the sidewalk.	6/25/2018	0	YES	Local
104	1	1	0	N/A	N/A	1	1	1	Fair	grass, crack and a gap	6/25/2018	1	NO	Local
105	1	1	1	N/A	N/A	1	1	1	Good	Tree overhang onto sidewalk.	6/25/2018	0	YES	Local
106	1	1	N/A	N/A	N/A	1	0	1	Poor	1" gap, grass and cracks, east half new	6/25/2018	1	NO	Local
107	1	1	0	N/A	N/A	1	1	1	Fair	Vegetation growth in the cracks of the sidewalk.	6/25/2018	1	NO	Local
108	1	1	0	N/A	N/A	1	0	1	Fair	detoriating concreye, cracks, south 1/3 new	6/25/2018	2	NO	Local
109	1	1	0	N/A	N/A	1	1	1	Fair	Vegetation growth in the cracks of the sidewalk. 1.5" or greater elevation gap.	6/25/2018	1	NO	Local
110	1	1	0	N/A	N/A	1	1	1	Fair	grass and cracks in about 1/4 of sidewalk	6/25/2018	1	NO	Local
111	1	1	0	N/A	N/A	1	1	1	Poor	Vegetation growth in the cracks of the sidewalk. Brush overhang onto sidewalk. Pavement deteriorating	6/25/2018	1	NO	Local
112	1	1	0	N/A	N/A	1	0	1	Poor	1 3/8 in gap	6/25/2018	2	NO	Local
113	1	1	0	N/A	N/A	1	1	1	Poor	detoriating concrete, cracks, 1 in gaps	6/25/2018	1	NO	Local
114	1	1	1	N/A	N/A	1	1	1	Good		6/25/2018	0	YES	Local
115	1	1	1	N/A	N/A	1	1	1	Good		6/25/2018	0	YES	Local
116	1	1	0	N/A	N/A	1	1	1	Fair	grass and cracks. small gaps. bushes in way	6/25/2018	1	NO	Local
117	1	1	0	N/A	N/A	1	1	1	Good	minor cracking	6/25/2018	1	NO	Local
118	1	1	0	N/A	N/A	1	1	0	Fair	Vegetation growth in the cracks of the sidewalk. Tree overhang onto sidewalk.	6/25/2018	2	NO	Local
119	1	0	0	N/A	N/A	1	1	1	Fair		6/25/2018	2	NO	Local
120	1	0	0	N/A	N/A	1	1	0	Fair	Missing concrete in the sidewalk	6/25/2018	3	NO	Local
121	1	1	0	N/A	N/A	1	1	0	Fair	Vegetation growth in the cracks of the sidewalk.	6/25/2018	2	NO	Local
122	1	1	1	N/A	N/A	1	1	1	Good		6/25/2018	0	YES	Local
123	1	1	0	N/A	N/A	1	0	1	Fair	grass, cracks and some upheaving	6/26/2018	2	NO	Local
124	1	1	0	N/A	N/A	1	1	0	Fair	1.5" or greater gap in elevation. Manhole in sidewalk.	6/26/2018	2	NO	Local
125	1	1	0	N/A	N/A	1	1	0	Fair	1.5" gap	6/26/2018	2	NO	Local
126	1	1	1	N/A	N/A	1	1	0	Good	4" gap in elevation	6/26/2018	1	NO	Local
127	1	1	1	N/A	N/A	1	1	1	Good		6/26/2018	0	YES	Local
128	1	1	1	N/A	N/A	1	1	1	Good		6/26/2018	0	YES	Local
129	1	1	0	N/A	N/A	1	0	0	Fair	some cracking and upheaving. portion in the West side is new	6/26/2018	3	NO	Local
130	1	1	0	N/A	N/A	1	1	0	Poor	a lot of cracking and unlevelness	6/26/2018	2	NO	Local
131	1	1	N/A	N/A	N/A	1	1	0	Fair	cracking, large gap along edge	6/26/2018	1	NO	Local
132	1	1	0	N/A	N/A	1	1	1	Good		6/26/2018	1	NO	Local
133	1	1	N/A	N/A	N/A	1	1	0	Fair	some cracking, chipping and bushes in way	6/26/2018	1	NO	Local
134	1	1	1	N/A	N/A	1	1	1	Good		6/26/2018	0	YES	Local

OBJECTID	Is the route stable, firm and slip-resistant?	Is the route at least 48in wide?	If the sidewalk is 200ft or more by 60in of less, is there a 60 in by 60in passing space?	If there are grates or openings are the openings 0.5 in or less?	Is the long dimension of grate opening perpendicular to the direction of travel?	Is the Running slope 5.0% or less?	Is the cross slope	Are there no gaps in elevation or distance between concrete panels >1.5"?	What is the overall condition of the sidewalk?	Notes	EditDate	# Non Compliant	Compliant	Jurisdiction
135	1	1	0	N/A	N/A	1	0	0	Good	slope is 2.2 but otherwise good condition	6/26/2018	3	NO	Local
136	1	1	0	N/A	N/A	1	1	1	Good	Tree overhang onto sidewalk	6/26/2018	1	NO	Local
137	1	1	N/A	N/A	N/A	1	0	0	Fair	small portion new, few panels with cracks and gaps	6/26/2018	2	NO	Local
138	1	1	1	N/A	N/A	1	1	0	Poor	A lot of cracking and broken up concrete. 1.5" or greater gaps.	6/26/2018	1	NO	Local
139	1	1	1	N/A	N/A	1	1	1	Fair	Tree overhang onto sidewalk.	6/26/2018	0	YES	Local
140	1	1	0	N/A	N/A	1	0	0	Fair	1 or 2 bad panels and trees in the way. 3" gap	6/26/2018	3	NO	Local
141	1	1	1	N/A	N/A	1	1	1	Good		6/26/2018	0	YES	Local
142	1	1	0	N/A	N/A	1	1	0	Good		6/26/2018	2	NO	Local
143	1	1	0	N/A	N/A	1	1	0	Fair	cracking	6/26/2018	2	NO	Local
144	1	1	0	N/A	N/A	1	1	1	Fair	some cracks	6/26/2018	1	NO	Local
146	1	1	0	N/A	N/A	1	1	0	Poor	Vegetation growth in the cracks of the sidewalk. 1.5" or greater gaps	6/26/2018	2	NO	Local
147	1	1	0	N/A	N/A	1	1	0	Fair	some cracks, light semi in sidewalk	6/26/2018	2	NO	Local
148	1	1	0	N/A	N/A	1	1	1	Poor	Vegetation growth in the cracks of the sidewalk.	6/26/2018	1	NO	Local
149	1	1	1	N/A	N/A	1	1	1	Fair		6/26/2018	0	YES	Local
150	1	1	0	N/A	N/A	1	1	0	Good	north part is really new. this ia also in good condition	6/26/2018	2	NO	Local
151	1	1	1	N/A	N/A	1	1	1	Good	Water gate valve in sidewalk	6/26/2018	0	YES	Local
152	1	1	1	N/A	N/A	1	1	1	Fair	Vegetation growth in the cracks of the sidewalk. Tree overhang onto sidewalk.	6/26/2018	0	YES	Local
153	1	1	1	N/A	N/A	1	1	0	Good	few cracks and have brick boulevards	6/26/2018	1	NO	Local
154	1	1	1	N/A	N/A	1	1	0	Good	minor cracks and bricke in boulevard	6/26/2018	1	NO	Local
155	1	1	1	N/A	N/A	1	1	1	Fair	Vegetation growth in the cracks of the sidewalk. Tree overhang onto sidewalk.	6/26/2018	0	YES	Local
156	1	1	1	N/A	N/A	1	1	0	Good		6/26/2018	1	NO	Local
157	1	1	1	N/A	N/A	1	1	0	Good	minor wear bricks in boulevard are bad	6/26/2018	1	NO	Local
158	1	1	1	N/A	N/A	1	1	0	Good	minot cracks, bricks in boulevard are bad	6/26/2018	1	NO	Local
159	1	1	0	N/A	N/A	1	1	0	Fair	tree growing over sidewalk, creating it to shirt and upheave	6/26/2018	2	NO	Local
160	1	1	0	N/A	N/A	1	1	1	Good	A lot of the sidewalk panels have been replaced already.	6/26/2018	1	NO	Local
161	1	1	0	N/A	N/A	1	1	0	Fair	1.5" or greater gaps. Vegetation growth in the cracks of the sidewalk.	6/26/2018	2	NO	Local
162	1	1	1	N/A	N/A	1	1	1	Fair	1.5" or greater gaps. Vegetation growth in the cracks of the sidewalk.	6/26/2018	0	YES	Local
163	1	1	N/A	N/A	N/A	1	1	0	Good		6/26/2018	1	NO	Local
164	1	1	1	N/A	N/A	1	1	0	Good	Electric Vault in the middle of the sidewalk. 1.5" or greater gap.	6/26/2018	1	NO	Local
165	1	1	N/A	N/A	N/A	1	0	0	Good	2.7% cross slope but concrete in good condition	6/26/2018	2	NO	Local
166	1	1	0	N/A	N/A	1	1	1	Fair	Tree overhang onto sidewalk.	6/26/2018	1	NO	Local
167	1	1	0	N/A	N/A	1	1	0	Good	not 48" throughout	6/26/2018	2	NO	Local
168	1	1	N/A	N/A	N/A	1	1	0	Fair	detoriated concrete, cracking	6/26/2018	1	NO	Local
169	1	1	1	N/A	N/A	1	1	1	Good		6/26/2018	0	YES	Local
170	1	1	1	N/A	N/A	1	1	1	Good		6/26/2018	0	YES	Local
171	1	1	1	N/A	N/A	1	1	1	Good		6/26/2018	0	YES	Local
172	1	1	N/A	N/A	N/A	1	1	1	Fair	spots of detoriated concrete	6/26/2018	0	YES	Local
173	1	1	0	N/A	N/A	1	1	1	Fair	Street light and bushes in the way of the sidewalk.	6/26/2018	1	NO	Local
174	1	1	0	N/A	N/A	1	1	1	Fair	Streetlights are in the sidewalk. Electric vault in sidewalk.	6/26/2018	1	NO	Local
175	1	1	1	N/A	N/A	1	1	1	Good		6/26/2018	0	YES	Local
176	1	1	N/A	N/A	N/A	1	1	0	Fair	cracks, detoriating concrete, grass	6/26/2018	1	NO	Local
177	1	1	0	N/A	N/A	1	1	0	Fair	trees in way, cracking	6/26/2018	2	NO	Local
178	1	1	1	N/A	N/A	1	1	1	Good		6/26/2018	0	YES	Local
179	1	1	0	N/A	N/A	1	0	0	Fair	cracking and a few panela upheaving	6/26/2018	3	NO	Local
180	1	1	1	N/A	N/A	1	1	1	Good		6/26/2018	0	YES	Local
181	1	1	N/A	N/A	N/A	1	1	0	Fair	all brick	6/26/2018	1	NO	Local
182	1	1	1	N/A	N/A	1	1	1	Good		6/26/2018	0	YES	Local
183	1	1	1	N/A	N/A	1	1	0	Good	prett good few panels upheaving	6/26/2018	1	NO	Local

OBJECTID	Is the route stable, firm and slip-resistant?	Is the route at least 48in wide?	If the sidewalk is 200ft or more by 60in of less, is there a 60 in by 60in passing space?	If there are grates or openings are the openings 0.5 in or less?	Is the long dimension of grate opening perpendicular to the direction of travel?	Is the Running slope 5.0% or less?	Is the cross slope	Are there no gaps in elevation or distance between concrete panels >1.5"?	What is the overall condition of the sidewalk?	Notes	EditDate	# Non Compliant	Compliant	Jurisdiction
184	1	1	1	N/A	N/A	1	0	0	Fair	cracking, uneven, brick amd dumpster in way	6/26/2018	2	NO	Local
185	1	1	N/A	N/A	N/A	1	0	0	Good	some upheaving and cross slope is 4.3%	6/26/2018	2	NO	Local
186	1	1	N/A	N/A	N/A	1	1	1	Good	minor cracking	6/26/2018	0	YES	Local
187	1	1	N/A	N/A	N/A	1	1	1	Good	good condition minor cracks	6/26/2018	0	YES	Local
188	1	1	1	N/A	N/A	1	1	0	Good	1.5" or greater gap.	6/26/2018	1	NO	Local
189	1	1	1	N/A	N/A	1	0	1	Good		6/26/2018	1	NO	Local
190	1	1	N/A	N/A	N/A	1	1	0	Fair	brick in some area, upheaving by entrance	6/26/2018	1	NO	Local
191	1	1	1	N/A	N/A	1	1	0	Good	overall good, some bricks by boulevard and utiltiy box in middle	6/26/2018	1	NO	Local
192	1	1	1	N/A	N/A	0	0	1	Good	2.2 cross slope	6/26/2018	2	NO	Local
193	1	1	N/A	N/A	N/A	1	1	0	Good	pretty level throughout but it is brick material	6/26/2018	1	NO	Local
194	1	1	1	N/A	N/A	1	1	1	Good		6/26/2018	0	YES	Local
195	1	1	N/A	N/A	N/A	1	1	0	Fair	pretty big lip	6/26/2018	1	NO	Local
196	1	1	0	N/A	N/A	1	0	1	Fair	Vegetation growth in the cracks of the sidewalk. Brush and tree overhang onto sidewalk	6/26/2018	2	NO	Local
197	1	1	0	N/A	N/A	1	0	1	Fair	2.9% cross slope, few bad panels, some new panels by edgewood	6/26/2018	2	NO	Local
198	1	1	0	N/A	N/A	1	1	0	Fair	Vegetation growth in the cracks of the curb ramp. 1.5" or greater gap. Tree and brush overhang onto	6/26/2018	2	NO	Local
199	1	1	0	N/A	N/A	1	1	0	Good	Electrical vault in sidewalk.	6/26/2018	2	NO	Local
200	1	1	1	N/A	N/A	1	1	0	Good	Centerline joint has a 1" gap in places.	6/26/2018	1	NO	Local
201	1	1	N/A	N/A	N/A	1	1	0	Good		6/26/2018	1	NO	Local
202	1	1	0	N/A	N/A	1	1	0	Good	minor cracking a little upheaving	6/26/2018	2	NO	Local
203	1	1	1	N/A	N/A	1	1	1	Good	Gas valve in sidewalk.	6/26/2018	0	YES	Local
204	1	1	0	N/A	N/A	1	1	1	Good		6/26/2018	1	NO	Local
205	1	1	0	N/A	N/A	1	1	0	Good	1" elevation gap	6/26/2018	2	NO	Local
206	1	1	0	N/A	N/A	1	1	1	Good		6/26/2018	1	NO	Local
207	1	1	0	N/A	N/A	1	1	1	Good		6/26/2018	1	NO	Local
208	1	1	0	N/A	N/A	1	1	0	Good	new on half of it	6/26/2018	2	NO	Local
209	1	1	0	N/A	N/A	1	1	1	Good		6/26/2018	1	NO	Local
210	1	1	0	N/A	N/A	0	1	1	Fair	few bad and unlevel panels	6/26/2018	2	NO	Local
211	1	1	0	N/A	N/A	1	1	0	Good	1.5" or greater gap in elevation	6/26/2018	2	NO	Local
212	1	1	0	N/A	N/A	1	1	0	Good		6/26/2018	2	NO	Local
213	1	1	0	N/A	N/A	1	1	1	Fair	Vegetation growth in the cracks of the sidewalk.	6/26/2018	1	NO	Local
214	1	1	0	N/A	N/A	1	1	1	Good		6/26/2018	1	NO	Local
215	1	1	0	N/A	N/A	1	1	1	Good	City Water Valve in the sidewalk	6/26/2018	1	NO	Local
216	1	1	N/A	N/A	N/A	1	1	1	Good	gas valve in sidewalk	6/26/2018	0	YES	Local
217	1	1	N/A	N/A	N/A	1	1	0	Good		6/26/2018	1	NO	Local
218	1	1	N/A	N/A	N/A	1	1	1	Good		6/26/2018	0	YES	Local
219	1	1	1	N/A	N/A	1	1	1	Good	Tree overhang onto the sidewalk	6/26/2018	0	YES	Local
220	1	1	N/A	N/A	N/A	1	1	0	Good		6/26/2018	1	NO	Local
221	1	1	1	N/A	N/A	1	1	1	Good	Water gate valve sticking up in the sidewalk.	6/26/2018	0	YES	Local
222	1	1	N/A	N/A	N/A	1	0	1	Good		6/26/2018	1	NO	Local
223	1	1	1	N/A	N/A	1	1	1	Good		6/26/2018	0	YES	Local
224	1	1	N/A	N/A	N/A	1	1	1	Good		6/26/2018	0	YES	Local
225	1	1	N/A	N/A	N/A	1	1	1	Good		6/26/2018	0	YES	Local
226	1	1	1	N/A	N/A	1	1	1	Good	Water gate valve in the sidewalk	6/26/2018	0	YES	Local
227	1	1	0	N/A	N/A	1	0	0	Good	gap between curb and sidewalk	6/26/2018	3	NO	Local
228	1	1	N/A	N/A	N/A	1	0	1	Good		6/26/2018	1	NO	Local
229	1	1	N/A	N/A	N/A	1	0	1	Good		6/26/2018	1	NO	Local
230	1	1	1	N/A	N/A	1	1	1	Good		6/26/2018	0	YES	Local
231	1	1	N/A	N/A	N/A	1	0	1	Good		6/26/2018	1	NO	Local
232	1	1	1	N/A	N/A	1	1	1	Good		6/26/2018	0	YES	Local
233	1	1	1	N/A	N/A	1	1	1	Good		6/26/2018	0	YES	Local
234	1	1	N/A	N/A	N/A	0	1	1	Good	9.8% on pavement heaved on 2 panels	6/26/2018	1	NO	Local

OBJECTID	Is the route stable, firm and slip-resistant?	Is the route at least 48in wide?	If the sidewalk is 200ft or more by 60in of less, is there a 60 in by 60in passing space?	If there are grates or openings are the openings 0.5 in or less?	Is the long dimension of grate opening perpendicular to the direction of travel?	Is the Running slope 5.0% or less?	Is the cross slope	Are there no gaps in elevation or distance between concrete panels >1.5"?	What is the overall condition of the sidewalk?	Notes	EditDate	# Non Compliant	Compliant	Jurisdiction
235	1	1	0	N/A	N/A	1	1	1	Good		6/26/2018	1	NO	Local
236	1	1	0	N/A	N/A	1	1	1	Good		6/26/2018	1	NO	Local
237	1	1	0	N/A	N/A	1	1	1	Fair	Vegetation growth in the cracks of the sidewalk.	6/26/2018	1	NO	Local
238	1	1	0	N/A	N/A	1	1	1	Good	little chipping snd upheaving	6/26/2018	1	NO	Local
239	1	1	0	N/A	N/A	1	0	0	Good		6/26/2018	3	NO	Local
240	1	1	0	N/A	N/A	0	1	1	Good		6/26/2018	2	NO	Local
241	1	1	N/A	N/A	N/A	1	1	1	Good		6/26/2018	0	YES	Local
242	1	1	0	N/A	N/A	1	1	0	Fair	Tree and brush overhang onto the sidewalk. Vegetation growth in cracks. 1.5" gap or greater	6/28/2018	2	NO	Local
243	1	1	0	N/A	N/A	0	1	1	Fair	5.2% running some upheaving and cracking	6/28/2018	2	NO	Local
244	1	1	0	N/A	N/A	1	1	1	Fair	some cracking, middle section new sidewalk	6/28/2018	1	NO	Local
245	1	1	0	N/A	N/A	1	0	1	Good	gap but less than 1.5	6/28/2018	2	NO	Local
246	1	1	0	N/A	N/A	1	1	1	Fair	Tree overhang onto sidewalk.	6/28/2018	1	NO	Local
247	1	1	0	N/A	N/A	1	0	1	Fair	some cracks	6/28/2018	2	NO	Local
248	1	1	0	N/A	N/A	1	1	1	Fair	cracking and grass	6/28/2018	1	NO	Local
249	1	0	0	N/A	N/A	1	1	1	Good		6/28/2018	2	NO	Local
250	1	1	0	N/A	N/A	1	1	1	Fair	long cracking detorating sidewalk	6/28/2018	1	NO	Local
251	1	1	0	N/A	N/A	1	1	0	Fair	1.5" or greater gap in elevation. Vegetation growth in the cracks of the sidewalk.	6/28/2018	2	NO	Local
252	1	1	0	N/A	N/A	1	0	1	Fair	cracking	6/28/2018	2	NO	Local
253	1	1	0	N/A	N/A	1	0	0	Fair	valve sticking out like 2 inchea	6/28/2018	3	NO	Local
254	1	0	0	N/A	N/A	1	1	1	Fair	Vegetation growth in the cracks of the sidewalk	6/28/2018	2	NO	Local
257	1	1	0	N/A	N/A	1	1	1	Good	5.2 crossing	6/28/2018	1	NO	Local
258	1	1	0	N/A	N/A	1	1	0	Poor	Missing pavement chunks. Vegetation growth in the cracks of the sidewalk. Tree overhang	6/28/2018	2	NO	Local
259	1	1	0	N/A	N/A	1	1	1	Fair	cracking and small gaps	6/28/2018	1	NO	Local
260	1	1	0	N/A	N/A	0	1	0	Fair	Driveway ramp built into sidewalk. Vegetation growth in the cracks of the sidewalk. Tree overhang	6/28/2018	3	NO	Local
262	1	1	0	N/A	N/A	1	1	0	Fair	1.5" or greater gap. Brush and tree overhang	6/28/2018	2	NO	Local
264	1	1	0	N/A	N/A	1	1	1	Good		6/28/2018	1	NO	Local
265	1	1	0	N/A	N/A	1	0	1	Fair	cracking and grass	6/28/2018	2	NO	Local
266	1	1	0	N/A	N/A	1	1	1	Fair		6/28/2018	1	NO	Local
267	1	1	0	N/A	N/A	1	1	1	Fair	cracking and tree in way	6/28/2018	1	NO	Local
268	1	1	0	N/A	N/A	1	0	1	Fair	cracking	6/28/2018	2	NO	Local
269	1	1	0	N/A	N/A	1	1	0	Fair	Broken concrete. 1.5" or greater gap. Water & Light Department vault.	6/28/2018	2	NO	Local
270	1	1	0	N/A	N/A	1	0	1	Good		6/28/2018	2	NO	Local
271	1	1	0	N/A	N/A	1	1	1	Good		6/28/2018	1	NO	Local
272	1	1	0	N/A	N/A	1	1	1	Fair		6/28/2018	1	NO	Local
273	1	1	0	N/A	N/A	1	0	1	Fair		6/28/2018	2	NO	Local
274	1	1	0	N/A	N/A	1	1	0	Fair	Tree overhang onto sidewalk.	6/28/2018	2	NO	Local
275	1	1	0	N/A	N/A	1	1	0	Fair	Brush and tree overhang onto sidewalk. Vegetation growth in the cracks of the sidewalk.	6/28/2018	2	NO	Local
276	1	1	0	N/A	N/A	1	0	1	Fair	cracks and detoriating concrete	6/28/2018	2	NO	Local
277	1	1	0	N/A	N/A	1	0	1	Good		6/28/2018	2	NO	Local
278	1	1	0	N/A	N/A	1	1	1	Fair	Tree overhang onto sidewalk. Vegetation growth in the cracks of the sidewalk.	6/28/2018	1	NO	Local
279	1	1	0	N/A	N/A	1	0	0	Poor	cracks a gap about 1.25"	6/28/2018	3	NO	Local
280	1	1	0	N/A	N/A	1	1	0	Fair	1.5" or greater gap in elevation. Vegetation growth in the cracks of the sidewalk. Tree overhang	6/28/2018	2	NO	Local
281	1	1	0	N/A	N/A	1	1	0	Fair	1.5" or greater gap. Brush and tree overhang. Vegetation growth in the cracks of the sidewalk.	6/28/2018	2	NO	Local
282	1	1	0	N/A	N/A	1	1	1	Fair		6/28/2018	1	NO	Local

OBJECTID	Is the route stable, firm and slip-resistant?	Is the route at least 48in wide?	If the sidewalk is 200ft or more by 60in of less, is there a 60 in by 60in passing space?	If there are grates or openings are the openings 0.5 in or less?	Is the long dimension of grate opening perpendicular to the direction of travel?	Is the Running slope 5.0% or less?	Is the cross slope	Are there no gaps in elevation or distance between concrete panels >1.5"?	What is the overall condition of the sidewalk?	Notes	EditDate	# Non Compliant	Compliant	Jurisdiction
283	1	1	0	N/A	N/A	1	1	1	Poor	Concrete is starting to unravel	6/28/2018	1	NO	Local
284	1	1	0	N/A	N/A	1	1	1	Fair		6/28/2018	1	NO	Local
285	1	1	0	N/A	N/A	1	1	0	Fair	Concrete is breaking up. 1.5" or greater gap. Tree overhang onto sidewalk.	6/28/2018	2	NO	Local
286	1	1	0	N/A	N/A	1	0	1	Fair		6/28/2018	2	NO	Local
287	1	1	0	N/A	N/A	1	1	0	Fair	1.5" or greater gap	6/28/2018	2	NO	Local
288	1	1	0	N/A	N/A	1	1	1	Fair		6/28/2018	1	NO	Local
289	1	1	0	N/A	N/A	1	0	1	Fair		6/28/2018	2	NO	Local
290	1	1	0	N/A	N/A	1	1	1	Fair	Tree overhang onto the sidewalk.	6/28/2018	1	NO	Local
291	1	1	0	N/A	N/A	1	1	1	Good		6/28/2018	1	NO	Local
292	1	1	0	N/A	N/A	1	1	0	Fair	1.5" or greater gap. Vegetation growth in the cracks of the sidewalk.	6/28/2018	2	NO	Local
293	1	1	0	N/A	N/A	1	1	0	Fair	1.5" or greater gap. Tree overhang onto the sidewalk.	6/28/2018	2	NO	Local
295	1	1	0	N/A	N/A	1	0	1	Fair		6/28/2018	2	NO	Local
296	1	1	N/A	N/A	N/A	1	1	1	Good	most new	6/28/2018	0	YES	Local
297	1	1	0	N/A	N/A	1	1	1	Fair		6/28/2018	1	NO	Local
298	1	1	0	N/A	N/A	1	1	0	Fair	1.5" or greater gap	6/28/2018	2	NO	Local
299	1	1	0	N/A	N/A	1	0	1	Fair		6/28/2018	2	NO	Local
300	1	1	0	N/A	N/A	1	1	1	Good		6/28/2018	1	NO	Local
301	1	1	0	N/A	N/A	1	0	1	Good	majority are new panels	6/28/2018	2	NO	Local
302	1	1	0	N/A	N/A	1	1	1	Fair	1.5" or greater gap. Vegetation growth in the cracks of the sidewalk.	6/28/2018	1	NO	Local
303	1	1	0	N/A	N/A	1	1	1	Fair	Sidewalk is not complete.	6/28/2018	1	NO	Local
304	1	1	0	N/A	N/A	1	0	0	Good	1.5" or greater gap along back of curb and at driveway points.	6/28/2018	3	NO	Local
305	1	1	0	N/A	N/A	1	1	1	Fair		6/28/2018	1	NO	Local
306	1	1	0	N/A	N/A	1	0	1	Fair		6/28/2018	2	NO	Local
307	1	1	0	N/A	N/A	1	1	1	Fair	detoriating	6/28/2018	1	NO	Local
308	1	1	0	N/A	N/A	1	0	1	Fair		6/28/2018	2	NO	Local
309	1	1	0	N/A	N/A	1	0	1	Fair		6/28/2018	2	NO	Local
310	1	1	0	N/A	N/A	1	1	1	Fair		6/28/2018	1	NO	Local
311	1	1	0	N/A	N/A	1	1	1	Fair	Vegetation growth in the cracks of the sidewalk.	6/28/2018	1	NO	Local
312	1	1	0	N/A	N/A	1	0	1	Fair		6/28/2018	2	NO	Local
313	1	1	0	N/A	N/A	1	1	1	Fair	Vegetation growth in the cracks of the sidewalk.	6/28/2018	1	NO	Local
314	1	1	0	N/A	N/A	1	1	1	Fair	Vegetation growth in the cracks of the sidewalk. Tree overhang onto sidewalk.	6/28/2018	1	NO	Local
315	1	1	1	N/A	N/A	1	1	1	Fair		6/28/2018	0	YES	Local
316	1	1	0	N/A	N/A	1	0	1	Good		6/28/2018	2	NO	Local
317	1	1	0	N/A	N/A	1	1	1	Fair	Mailboxes are in the sidewalk	6/28/2018	1	NO	Local
318	1	1	0	N/A	N/A	0	0	0	Poor	water valve sticking up 4 inches, mailboxes in sidewalks	6/28/2018	4	NO	Local
319	1	1	0	N/A	N/A	1	1	1	Fair	Mailboxes are in the sidewalk. Brush overhang onto sidewalk.	6/28/2018	1	NO	Local
320	1	1	0	N/A	N/A	1	1	1	Fair	mailboxes in sidewalk	6/28/2018	1	NO	Local
321	1	1	0	N/A	N/A	1	1	1	Fair	Mailboxes are in the sidewalk. Sidewalk is not complete	6/28/2018	1	NO	Local
322	1	1	0	N/A	N/A	1	0	0	Fair	mailbox is way, driveway apron is blasted apart	6/28/2018	3	NO	Local
323	1	1	0	N/A	N/A	1	1	1	Fair	Mailboxes are in the sidewalk. Sidewalk is not complete. Vegetation growth in the cracks of the SW	6/28/2018	1	NO	Local
325	1	1	0	N/A	N/A	1	1	0	Fair	1.5" or greater gap. Sidewalk is not complete on both sides of this point.	6/28/2018	2	NO	Local
326	1	1	0	N/A	N/A	1	1	1	Fair	mailboxes and some gaps	6/28/2018	1	NO	Local
327	1	1	0	N/A	N/A	1	0	1	Fair		6/28/2018	2	NO	Local
328	1	1	0	N/A	N/A	1	1	0	Good	Mayilbox anything on the sidewalk. Sidewalk is not complete.	6/28/2018	2	NO	Local
329	1	1	0	N/A	N/A	1	0	1	Fair	slight gaps and mailboxes	6/28/2018	2	NO	Local
330	1	1	0	N/A	N/A	1	0	1	Fair		6/28/2018	2	NO	Local
331	1	1	0	N/A	N/A	1	0	0	Fair	mailboxes	6/28/2018	3	NO	Local

OBJECTID	Is the route stable, firm and slip-resistant?	Is the route at least 48in wide?	If the sidewalk is 200ft or more by 60in of less, is there a 60 in by 60in passing space?	If there are grates or openings are the openings 0.5 in or less?	Is the long dimension of grate opening perpendicular to the direction of travel?	Is the Running slope 5.0% or less?	Is the cross slope	Are there no gaps in elevation or distance between concrete panels >1.5"?	What is the overall condition of the sidewalk?	Notes	EditDate	# Non Compliant	Compliant	Jurisdiction
332	1	1	0	N/A	N/A	1	1	1	Fair	Mailboxes are in the sidewalk	6/28/2018	1	NO	Local
333	1	1	0	N/A	N/A	1	1	1	Good	Mailboxes are in the sidewalk.	6/28/2018	1	NO	Local
334	1	1	0	N/A	N/A	1	0	1	Fair		6/28/2018	2	NO	Local
335	1	1	0	N/A	N/A	1	1	0	Fair	Broken sidewalk panels.	6/28/2018	2	NO	Local
336	1	1	0	N/A	N/A	0	1	1	Good		6/28/2018	2	NO	Local
337	1	1	0	N/A	N/A	1	1	1	Good		6/28/2018	1	NO	Local
338	1	1	0	N/A	N/A	1	1	1	Fair		6/28/2018	1	NO	Local
339	1	1	0	N/A	N/A	1	1	1	Good		6/28/2018	1	NO	Local
340	1	1	0	N/A	N/A	1	0	1	Fair		6/28/2018	2	NO	Local
341	1	1	0	N/A	N/A	1	1	0	Poor	1.5" or greater gap	6/28/2018	2	NO	Local
342	1	1	0	N/A	N/A	0	0	1	Fair		6/28/2018	3	NO	Local
343	1	1	0	N/A	N/A	1	1	1	Fair	Water gate valve sticking up through the sidewalk.	6/28/2018	1	NO	Local
344	1	1	0	N/A	N/A	1	1	1	Good		6/28/2018	1	NO	Local
345	1	1	0	N/A	N/A	1	1	1	Good	Some cracking throughout the sidewalk. Tree overhang onto sidewalk.	6/28/2018	1	NO	Local
346	1	1	0	N/A	N/A	1	1	1	Fair		6/28/2018	1	NO	Local
347	1	1	0	N/A	N/A	1	1	1	Fair		6/28/2018	1	NO	Local
349	1	1	0	N/A	N/A	1	1	0	Fair	Vegetation growth in the cracks of the sidewalk. Brush overhang onto sidewalk. 1.5" or greater gap.	6/28/2018	2	NO	Local
350	1	1	0	N/A	N/A	1	1	1	Good		6/28/2018	1	NO	Local
351	1	1	0	N/A	N/A	1	1	1	Poor	missing a part and gaps about 3/4"	6/28/2018	1	NO	Local
352	1	1	0	N/A	N/A	1	1	1	Fair	Cracks in the sidewalk	6/28/2018	1	NO	Local
353	1	1	0	N/A	N/A	1	1	1	Fair	Brush overhang onto sidewalk	6/28/2018	1	NO	Local
354	1	1	0	N/A	N/A	1	1	0	Fair	1.5" or greater gap. Sidewalk is not complete	6/28/2018	2	NO	Local
355	1	1	0	N/A	N/A	1	1	1	Fair	Tree overhang onto sidewalk.	6/28/2018	1	NO	Local
356	1	1	0	N/A	N/A	1	1	1	Fair		6/28/2018	1	NO	Local
357	1	1	0	N/A	N/A	1	1	1	Good		6/28/2018	1	NO	Local
358	1	1	0	N/A	N/A	1	1	1	Fair		6/29/2018	1	NO	Local
359	1	1	0	N/A	N/A	1	1	0	Fair	1.5" or greater gap. Tree overhang onto sidewalk.	6/29/2018	2	NO	Local
360	1	1	0	N/A	N/A	1	1	1	Fair		6/29/2018	1	NO	Local
361	1	1	0	N/A	N/A	1	1	1	Fair	cracking about .5 inches	6/29/2018	1	NO	Local
362	1	1	0	N/A	N/A	1	1	1	Fair		6/29/2018	1	NO	Local
363	1	1	0	N/A	N/A	1	1	1	Poor		6/29/2018	1	NO	Local
364	1	1	0	N/A	N/A	1	1	0	Fair	1.5" or greater gap. Tree overhang onto sidewalk.	6/29/2018	2	NO	Local
365	1	1	0	N/A	N/A	1	0	1	Fair		6/29/2018	2	NO	Local
366	1	1	0	N/A	N/A	1	1	1	Fair		6/29/2018	1	NO	Local
367	1	1	0	N/A	N/A	1	1	1	Fair	looks like missing sidewalk next to agg driveway	6/29/2018	1	NO	Local
368	1	1	0	N/A	N/A	1	1	0	Good	Water gate valve sticking up out of the sidewalk.	6/29/2018	2	NO	Local
369	1	1	1	N/A	N/A	1	1	1	Fair	Vegetation growth in the cracks of the sidewalk. Sidewalk is not complete	6/29/2018	0	YES	Local
370	1	1	0	N/A	N/A	1	1	1	Fair	slight lip	6/29/2018	1	NO	Local
371	1	1	0	N/A	N/A	1	1	0	Fair	Vegetation growth in the cracks of the sidewalk. 1.5" or greater gap	6/29/2018	2	NO	Local
372	1	1	0	N/A	N/A	1	0	1	Fair		6/29/2018	2	NO	Local
373	1	1	0	N/A	N/A	1	1	1	Fair	north portion looks new, southern portion older	6/29/2018	1	NO	Local
374	0	0	0	N/A	N/A	0	0	0		There is no sidewalk here.	6/29/2018	6	NO	Local
377	1	1	0	N/A	N/A	1	1	1	Good		6/29/2018	1	NO	Local
378	1	1	0	N/A	N/A	1	1	1	Fair		6/29/2018	1	NO	Local
379	1	1	0	N/A	N/A	1	1	0	Fair	1.5" or greater gap	6/29/2018	2	NO	Local
380	1	1	0	N/A	N/A	1	1	0	Fair	Water & Light Department vault in the sidewalk. 1.5" or greater gap.	6/29/2018	2	NO	Local
381	1	1	1	N/A	N/A	1	1	0	Good	1.5" or greater gap	6/29/2018	1	NO	Local
382	1	1	0	N/A	N/A	1	1	1	Good		6/29/2018	1	NO	Local

OBJECTID	Is the route stable, firm and slip-resistant?	Is the route at least 48in wide?	If the sidewalk is 200ft or more by 60in of less, is there a 60 in by 60in passing space?	If there are grates or openings are the openings 0.5 in or less?	Is the long dimension of grate opening perpendicular to the direction of travel?	Is the Running slope 5.0% or less?	Is the cross slope	Are there no gaps in elevation or distance between concrete panels >1.5"?	What is the overall condition of the sidewalk?	Notes	EditDate	# Non Compliant	Compliant	Jurisdiction
383	1	1	0	N/A	N/A	1	1	1	Fair		6/29/2018	1	NO	Local
384	1	1	N/A	N/A	N/A	1	1	1	Good		6/29/2018	0	YES	Local
385	1	1	1	N/A	N/A	1	0	0	Good	2.1 cross slope. 1.5" or greater gap.	6/29/2018	2	NO	Local
386	1	1	N/A	N/A	N/A	1	1	1	Good		6/29/2018	0	YES	Local
387	1	1	N/A	N/A	N/A	1	1	1	Good		6/29/2018	0	YES	Local
388	1	1	N/A	N/A	N/A	1	1	1	Good		6/29/2018	0	YES	Local
389	1	1	1	N/A	N/A	1	1	0	Good	1.5" or greater gap.	6/29/2018	1	NO	Local
390	1	1	N/A	N/A	N/A	1	1	1	Good		6/29/2018	0	YES	Local
391	1	1	1	N/A	N/A	1	1	1	Good		6/29/2018	0	YES	Local
392	1	1	N/A	N/A	N/A	1	1	1	Good		6/29/2018	0	YES	Local
393	1	1	N/A	N/A	N/A	1	1	0	Good	huge lip between sidewalk and path by bathroom	6/29/2018	1	NO	Local
394	1	1	1	N/A	N/A	1	1	1	Good		6/29/2018	0	YES	Local
395	1	1	N/A	N/A	N/A	1	1	1	Good		6/29/2018	0	YES	Local
396	1	1	N/A	N/A	N/A	1	1	1	Good		6/29/2018	0	YES	Local
397	1	1	0	N/A	N/A	1	1	1	Good		6/29/2018	1	NO	Local
398	1	1	1	N/A	N/A	1	1	1	Good		6/29/2018	0	YES	Local
399	1	1	0	N/A	N/A	1	1	1	Fair		6/29/2018	1	NO	Local
400	1	1	0	N/A	N/A	1	0	1	Fair	Grass overgrowth onto sidewalk. The sidewalk is not complete.	6/29/2018	2	NO	Local
401	1	1	0	N/A	N/A	1	1	1	Fair		6/29/2018	1	NO	Local
402	1	1	0	N/A	N/A	1	1	1	Fair		6/29/2018	1	NO	Local
403	1	1	0	N/A	N/A	1	1	1	Good	Most of the sidewalk is new	6/29/2018	1	NO	Local
404	1	1	0	N/A	N/A	1	1	1	Fair	Tree overhang onto the sidewalk. Grass overgrowth onto the sidewalk.	6/29/2018	1	NO	Local
405	1	1	0	N/A	N/A	1	0	1	Fair		6/29/2018	2	NO	Local
406	1	1	0	N/A	N/A	1	0	1	Good		6/29/2018	2	NO	Local
407	1	1	0	N/A	N/A	1	1	1	Good		6/29/2018	1	NO	Local
408	1	1	N/A	N/A	N/A	1	1	1	Good		6/29/2018	0	YES	Local
409	1	1	N/A	N/A	N/A	1	1	1	Good		6/29/2018	0	YES	Local
410	1	1	0	N/A	N/A	1	1	1	Fair	Mailboxes are in the sidewalk.	6/29/2018	1	NO	Local
411	1	1	1	N/A	N/A	1	1	1	Good		6/29/2018	0	YES	Local
412	1	1	0	N/A	N/A	1	1	1	Good		6/29/2018	1	NO	Local
413	1	1	1	N/A	N/A	1	1	1	Good	There is a dip in the shared use path	6/29/2018	0	YES	Local
414	1	1	0	N/A	N/A	1	0	0	Fair		6/29/2018	3	NO	Local
415	1	1	0	N/A	N/A	1	1	1	Fair		6/29/2018	1	NO	Local
416	1	1	0	N/A	N/A	1	1	0	Fair	Water gate valve sticking up through the sidewalk. 1.5" or greater gap	6/29/2018	2	NO	Local
417	1	1	1	N/A	N/A	1	1	0	Good	1.5" or greater gap. Most of the sidewalk is new.	6/29/2018	1	NO	Local
418	1	1	0	N/A	N/A	1	1	1	Fair	Vegetation growth in the cracks of the sidewalk. 1.5" or greater gap.	6/29/2018	1	NO	Local
419	1	1	0	N/A	N/A	1	1	1	Good		6/29/2018	1	NO	Local
420	1	1	0	N/A	N/A	1	1	1	Good		6/29/2018	1	NO	Local
421	1	1	0	N/A	N/A	1	1	1	Good		6/29/2018	1	NO	Local
422	1	1	0	N/A	N/A	1	0	1	Fair		6/29/2018	2	NO	Local
423	1	1	0	N/A	N/A	1	1	1	Good		6/29/2018	1	NO	Local
424	1	1	0	N/A	N/A	1	1	0	Fair	1.5" or greater gap	6/29/2018	2	NO	Local
425	1	1	0	N/A	N/A	1	0	1	Good		6/29/2018	2	NO	Local
426	1	1	0	N/A	N/A	1	1	1	Poor		6/29/2018	1	NO	Local
427	1	1	0	N/A	N/A	1	1	1	Good		6/29/2018	1	NO	Local
428	1	1	0	N/A	N/A	1	1	1	Good		6/29/2018	1	NO	Local
429	1	1	0	N/A	N/A	1	1	1	Good	manholr in sidewalk	6/29/2018	1	NO	Local
430	1	1	0	N/A	N/A	1	1	1	Good		6/29/2018	1	NO	Local
431	1	1	0	N/A	N/A	1	1	1	Good		6/29/2018	1	NO	Local
432	1	1	0	N/A	N/A	1	1	1	Good		6/29/2018	1	NO	Local

OBJECTID	Is the route stable, firm and slip-resistant?	Is the route at least 48in wide?	If the sidewalk is 200ft or more by 60in of less, is there a 60 in by 60in passing space?	If there are grates or openings are the openings 0.5 in or less?	Is the long dimension of grate opening perpendicular to the direction of travel?	Is the Running slope 5.0% or less?	Is the cross slope	Are there no gaps in elevation or distance between concrete panels >1.5"?	What is the overall condition of the sidewalk?	Notes	EditDate	# Non Compliant	Compliant	Jurisdiction
433	1	1	0	N/A	N/A	1	1	1	Good		6/29/2018	1	NO	Local
434	1	1	0	N/A	N/A	1	1	1	Good		6/29/2018	1	NO	Local
435	1	1	0	N/A	N/A	1	1	1	Good		6/29/2018	1	NO	Local
436	1	1	0	N/A	N/A	1	1	1	Good		6/29/2018	1	NO	Local
437	1	1	0	N/A	N/A	1	1	1	Good	utility box as sidewalk	6/29/2018	1	NO	Local
438	1	1	0	N/A	N/A	1	1	1	Good		6/29/2018	1	NO	Local
439	1	1	0	N/A	N/A	1	1	1	Good		6/29/2018	1	NO	Local
440	1	1	0	N/A	N/A	1	1	1	Good		6/29/2018	1	NO	Local
441	1	1	0	N/A	N/A	1	1	1	Good		6/29/2018	1	NO	Local
442	1	1	0	N/A	N/A	1	1	0	Fair	Light post heaved upwards.	6/29/2018	2	NO	Local
443	1	1	0	N/A	N/A	1	1	1	Good		6/29/2018	1	NO	Local
444	1	1	0	N/A	N/A	1	1	1	Good		6/29/2018	1	NO	Local
445	1	1	0	N/A	N/A	1	1	1	Good		6/29/2018	1	NO	Local
446	1	1	0	N/A	N/A	1	1	1	Good		6/29/2018	1	NO	Local
447	1	1	1	N/A	N/A	1	1	1	Fair	1.5" or greater gap	6/29/2018	0	YES	Local
448	1	1	0	N/A	N/A	1	1	1	Good		6/29/2018	1	NO	Local
449	1	1	0	N/A	N/A	1	1	1	Good		6/29/2018	1	NO	Local
450	1	1	N/A	N/A	N/A	1	1	1	Good		6/29/2018	0	YES	Local
451	1	1	0	N/A	N/A	1	1	0	Fair	1.5" or greater gap.	6/29/2018	2	NO	Local
452	1	1	N/A	N/A	N/A	1	1	1	Good		6/29/2018	0	YES	Local
453	1	1	N/A	N/A	N/A	0	1	1	Good		6/29/2018	1	NO	Local
454	1	1	0	N/A	N/A	1	1	0	Good	10" - 12" drop along the edge	6/29/2018	2	NO	Local
455	1	1	N/A	N/A	N/A	1	1	1	Good		6/29/2018	0	YES	Local
456	1	1	0	N/A	N/A	1	1	1	Fair		6/29/2018	1	NO	Local
457	1	1	0	N/A	N/A	1	1	0	Good	1.5" or greater gap.	6/29/2018	2	NO	Local
458	1	1	0	N/A	N/A	1	1	1	Good		6/29/2018	1	NO	Local
459	1	1	N/A	N/A	N/A	1	1	1	Good		6/29/2018	0	YES	Local
460	1	1	0	N/A	N/A	1	1	1	Good		6/29/2018	1	NO	Local
461	1	1	N/A	N/A	N/A	1	1	1	Good		6/29/2018	0	YES	Local
462	1	1	N/A	N/A	N/A	1	1	1	Good		6/29/2018	0	YES	Local
463	1	1	0	N/A	N/A	1	1	0	Good	1.5" gap or greater. Most of the sidewalk is new.	6/29/2018	2	NO	Local
464	1	1	0	N/A	N/A	1	1	1	Good		6/29/2018	1	NO	Local
465	1	1	0	N/A	N/A	1	1	1	Fair		6/29/2018	1	NO	Local
466	1	1	0	N/A	N/A	1	0	0	Good	sidewalk good but upheaving in a few spots	6/29/2018	3	NO	Local
467	1	1	0	N/A	N/A	1	1	1	Fair		6/29/2018	1	NO	Local
468	1	1	0	N/A	N/A	1	1	1	Good		6/29/2018	1	NO	Local
469	1	1	0	N/A	N/A	1	0	1	Fair	Tree roots heaving up sidewalk	6/29/2018	2	NO	Local
470	1	1	0	N/A	N/A	1	1	1	Good		6/29/2018	1	NO	Local
471	1	1	0	N/A	N/A	1	1	1	Fair	a lot of grass on the northern portion	6/29/2018	1	NO	Local
472	1	1	0	N/A	N/A	1	1	0	Fair	1.5" or greater gap.	6/29/2018	2	NO	Local
473	1	1	0	N/A	N/A	1	1	1	Good	mostly new sidewalk	6/29/2018	1	NO	Local
474	1	1	0	N/A	N/A	1	1	0	Poor	Vegetation growth in the cracks of the sidewalk. 1.5" or greater gap. Sidewalk is not complete.	6/29/2018	2	NO	Local
475	1	1	0	N/A	N/A	1	1	1	Good		6/29/2018	1	NO	Local
476	1	1	0	N/A	N/A	1	1	0	Fair	1.5" or greater gaps. Vegetation growth in the cracks of the sidewalk.	6/29/2018	2	NO	Local
477	1	1	0	N/A	N/A	1	1	1	Good	good portion is new concrete	6/29/2018	1	NO	Local
478	1	1	0	N/A	N/A	1	1	1	Good		6/29/2018	1	NO	Local
479	1	1	0	N/A	N/A	1	1	1	Good	mostly new concrete	6/29/2018	1	NO	Local
480	1	1	0	N/A	N/A	1	1	0	Poor	Tree roots heaved up the sidewalk. Vegetation growth in the cracks of the SW. SW isn't complete	6/29/2018	2	NO	Local
481	1	1	0	N/A	N/A	1	1	1	Fair	Vegetation growth in the cracks of the sidewalk	6/29/2018	1	NO	Local
482	1	1	N/A	N/A	N/A	1	0	1	Good	a lot is slanting to roadway but new concrete	6/29/2018	1	NO	Local

OBJECTID	Is the route stable, firm and slip-resistant?	Is the route at least 48in wide?	If the sidewalk is 200ft or more by 60in of less, is there a 60 in by 60in passing space?	If there are grates or openings are the openings 0.5 in or less?	Is the long dimension of grate opening perpendicular to the direction of travel?	Is the Running slope 5.0% or less?	Is the cross slope	Are there no gaps in elevation or distance between concrete panels >1.5"?	What is the overall condition of the sidewalk?	Notes	EditDate	# Non Compliant	Compliant	Jurisdiction
483	1	1	0	N/A	N/A	1	1	1	Fair	longitudinal cracks	6/29/2018	1	NO	Local
484	1	1	0	N/A	N/A	1	1	1	Fair		6/29/2018	1	NO	Local
485	1	1	0	N/A	N/A	1	1	1	Fair	Vegetation growth in the cracks of the sidewalk.	6/29/2018	1	NO	Local
486	1	1	0	N/A	N/A	1	1	1	Good	all new	6/29/2018	1	NO	Local
487	1	1	0	N/A	N/A	1	1	1	Good	There are a few panels that could be replaced on this block otherwise the SW is new	6/29/2018	1	NO	Local
488	1	1	0	N/A	N/A	1	1	1	Fair		6/29/2018	1	NO	Local
489	1	1	0	N/A	N/A	1	1	1	Fair		6/29/2018	1	NO	Local
490	1	1	0	N/A	N/A	1	0	1	Fair		6/29/2018	2	NO	Local
491	1	1	N/A	N/A	N/A	1	1	1	Good		6/29/2018	0	YES	Local
492	1	1	1	N/A	N/A	1	1	1	Good		6/29/2018	0	YES	Local
493	1	1	N/A	N/A	N/A	1	1	1	Good		6/29/2018	0	YES	Local
494	1	1	0	N/A	N/A	1	1	1	Good		6/29/2018	1	NO	Local
495	1	1	0	N/A	N/A	1	1	1	Good		6/29/2018	1	NO	Local
496	1	1	N/A	N/A	N/A	1	1	1	Good		6/29/2018	0	YES	Local
497	1	1	0	N/A	N/A	1	1	1	Good		6/29/2018	1	NO	Local
498	1	1	0	N/A	N/A	1	1	1	Good		6/29/2018	1	NO	Local
499	1	1	1	N/A	N/A	1	1	1	Good	Sidewalk is new. Sidewalk is not complete.	6/29/2018	0	YES	Local
500	1	1	1	N/A	N/A	1	1	0	Good	Sidewalk is new. Sidewalk is not complete.	6/29/2018	1	NO	Local
501	1	1	1	N/A	N/A	1	1	1	Good	Sidewalk is new. Sidewalk is not complete.	6/29/2018	0	YES	Local
502	1	1	1	N/A	N/A	1	1	0	Good	Sidewalk is new. Sidewalk is not complete.	6/29/2018	1	NO	Local
503	1	1	N/A	N/A	N/A	1	1	1	Fair		6/29/2018	0	YES	Local
504	1	1	N/A	N/A	N/A	1	1	1	Fair	a large space between the 2 panels	6/29/2018	0	YES	Local
505	1	1	N/A	N/A	N/A	1	1	0	Fair		6/29/2018	1	NO	Local
506	1	1	N/A	N/A	N/A	1	1	1	Good		6/29/2018	0	YES	Local
507	1	1	0	N/A	N/A	1	1	1	Good		6/29/2018	1	NO	Local
508	1	1	N/A	N/A	N/A	1	1	1	Good		6/29/2018	0	YES	Local
509	1	1	N/A	N/A	N/A	1	1	1	Good		6/29/2018	0	YES	Local
510	1	1	0	N/A	N/A	1	1	1	Good		6/29/2018	1	NO	Local
511	1	1	N/A	N/A	N/A	1	1	1	Good		6/29/2018	0	YES	Local
512	1	1	N/A	N/A	N/A	1	1	1	Good		6/29/2018	0	YES	Local
513	1	1	1	N/A	N/A	1	1	1	Good		6/29/2018	0	YES	Local
514	1	1	N/A	N/A	N/A	1	1	1	Good		6/29/2018	0	YES	Local
515	1	1	N/A	N/A	N/A	1	1	1	Good		6/29/2018	0	YES	Local
516	1	1	0	N/A	N/A	1	1	1	Good		6/29/2018	1	NO	Local
517	1	1	0	N/A	N/A	1	1	1	Good		6/29/2018	1	NO	Local
518	1	1	N/A	N/A	N/A	1	1	1	Fair	brick	7/2/2018	0	YES	Local
519	1	1	N/A	N/A	N/A	1	1	1	Fair	brick with gaps	7/2/2018	0	YES	Local
520	1	1	0	N/A	N/A	1	1	1	Fair		7/2/2018	1	NO	Local
521	1	1	1	N/A	N/A	1	1	1	Good		7/2/2018	0	YES	Local
522	1	1	N/A	N/A	N/A	1	1	1	Good		7/2/2018	0	YES	Local
523	1	1	1	N/A	N/A	1	0	1		Cross slope is 3.8%	7/2/2018	1	NO	Local
524	1	1	1	N/A	N/A	1	1	1	Good		7/2/2018	0	YES	Local
525	1	1	N/A	N/A	N/A	1	1	1	Good		7/2/2018	0	YES	Local
526	1	1	1	N/A	N/A	1	1	0	Good	1.5" or greater gap.	7/2/2018	1	NO	Local
527	1	1	N/A	N/A	N/A	1	1	1	Good	giant concrete in middle	7/2/2018	0	YES	Local
528	1	1	0	N/A	N/A	1	1	1	Good		7/2/2018	1	NO	Local
529	1	1	1	N/A	N/A	1	1	0	Good	1.5" or greater gap along the back of curb. Tree overhang onto the sidewalk.	7/2/2018	1	NO	Local
530	1	1	1	N/A	N/A	1	1	1	Fair	Vegetation growth in the cracks of the sidewalk.	7/2/2018	0	YES	Local
531	1	1	1	N/A	N/A	1	1	0	Good	1.5" or greater gap	7/2/2018	1	NO	Local
532	1	1	N/A	N/A	N/A	1	1	1	Good		7/2/2018	0	YES	Local
533	1	1	1	N/A	N/A	1	1	0	Good		7/2/2018	1	NO	Local

OBJECTID	Is the route stable, firm and slip-resistant?	Is the route at least 48in wide?	If the sidewalk is 200ft or more by 60in of less, is there a 60 in by 60in passing space?	If there are grates or openings are the openings 0.5 in or less?	Is the long dimension of grate opening perpendicular to the direction of travel?	Is the Running slope 5.0% or less?	Is the cross slope	Are there no gaps in elevation or distance between concrete panels >1.5"?	What is the overall condition of the sidewalk?	Notes	EditDate	# Non Compliant	Compliant	Jurisdiction
534	1	1	N/A	N/A	N/A	1	1	1	Good		7/2/2018	0	YES	Local
535	1	1	1	N/A	N/A	1	1	0	Good	1.5" or greater gap.	7/2/2018	1	NO	Local
536	1	1	0	N/A	N/A	1	1	1	Good	1 inch gap	7/2/2018	1	NO	Local
537	1	1	1	N/A	N/A	1	1	1	Good		7/2/2018	0	YES	Local
538	1	1	0	N/A	N/A	1	0	1	Fair		7/2/2018	2	NO	Local
539	1	1	1	N/A	N/A	1	1	0	Good	1.5" or greater gap	7/2/2018	1	NO	Local
540	1	1	1	N/A	N/A	1	1	1	Good	Vegetation growth in the cracks of the sidewalk.	7/2/2018	0	YES	Local
541	1	1	0	N/A	N/A	1	1	1	Fair	utility box in sidewalk	7/2/2018	1	NO	Local
542	1	1	1	N/A	N/A	1	1	1	Good		7/2/2018	0	YES	Local
543	1	1	1	N/A	N/A	1	1	1	Good		7/2/2018	0	YES	Local
544	1	1	N/A	1	0	1	1	1	Good		7/2/2018	1	NO	Local
545	1	1	1	N/A	N/A	1	1	1	Good		7/2/2018	0	YES	Local
546	1	1	1	N/A	N/A	1	1	1	Good		7/2/2018	0	YES	Local
547	1	1	N/A	N/A	N/A	1	1	1	Good		7/2/2018	0	YES	Local
548	1	1	1	N/A	N/A	1	1	1	Good		7/2/2018	0	YES	Local
549	1	1	1	N/A	N/A	1	1	1	Good		7/2/2018	0	YES	Local
550	1	1	N/A	N/A	N/A	1	0	1	Fair		7/2/2018	1	NO	Local
551	1	1	N/A	N/A	N/A	1	1	1	Good		7/2/2018	0	YES	Local
552	1	1	1	N/A	N/A	0	1	0	Good	Running slope 5.2%	7/2/2018	2	NO	Local
553	1	1	N/A	N/A	N/A	1	1	1	Fair		7/2/2018	0	YES	Local
554	1	1	N/A	N/A	N/A	1	1	1	Fair	after bridge trail is not existant	7/2/2018	0	YES	Local
555	1	1	1	N/A	N/A	1	0	1	Fair	Cross slope is 2.1%	7/2/2018	1	NO	Local
556	1	1	N/A	N/A	N/A	1	1	1	Fair		7/2/2018	0	YES	Local
557	1	1	1	N/A	N/A	1	1	1	Good		7/2/2018	0	YES	Local
558	1	1	N/A	N/A	N/A	1	1	1	Fair		7/2/2018	0	YES	Local
559	1	1	N/A	N/A	N/A	1	1	1	Good		7/2/2018	0	YES	Local
560	1	1	1	N/A	N/A	1	0	1	Good	There's a culvert running underneath the Shared Use Path here causing a dip in the pavement. 2.9% Cross slope.	7/2/2018	1	NO	Local
561	1	1	N/A	N/A	N/A	1	1	1	Good		7/2/2018	0	YES	Local
562	1	1	N/A	N/A	N/A	1	1	1	Good		7/2/2018	0	YES	Local
563	1	1	N/A	N/A	N/A	1	1	1	Fair		7/2/2018	0	YES	Local
564	1	1	N/A	N/A	N/A	1	1	1	Fair		7/2/2018	0	YES	Local
565	1	1	1	N/A	N/A	1	1	1	Good		7/2/2018	0	YES	Local
566	1	1	N/A	N/A	N/A	1	1	1	Good		7/2/2018	0	YES	Local
567	1	1	N/A	N/A	N/A	1	1	1	Good		7/2/2018	0	YES	Local
568	1	1	N/A	N/A	N/A	1	1	1	Fair		7/2/2018	0	YES	Local
569	1	1	N/A	N/A	N/A	1	1	1	Fair		7/2/2018	0	YES	Local
570	1	1	N/A	N/A	N/A	1	1	1	Fair		7/2/2018	0	YES	Local
571	1	1	N/A	N/A	N/A	1	1	1	Fair		7/2/2018	0	YES	Local
572	1	1	N/A	N/A	N/A	1	1	1	Fair		7/2/2018	0	YES	Local
573	1	1	1	N/A	N/A	1	1	1	Good	Shared Use Path has a dip in it that is holding water.	7/2/2018	0	YES	Local
574	1	1	N/A	N/A	N/A	1	1	1	Fair		7/2/2018	0	YES	Local
575	1	1	N/A	N/A	N/A	1	1	1	Good		7/2/2018	0	YES	Local
576	1	1	1	N/A	N/A	1	1	1	Good	Brush overhang onto shared use path.	7/2/2018	0	YES	Local
577	1	1	N/A	N/A	N/A	1	1	1	Good		7/2/2018	0	YES	Local
578	1	1	1	N/A	N/A	1	1	1	Good		7/2/2018	0	YES	Local
579	1	1	N/A	N/A	N/A	1	1	1	Good		7/2/2018	0	YES	Local
580	1	1	N/A	N/A	N/A	1	1	1	Good		7/2/2018	0	YES	Local
581	1	1	1	N/A	N/A	1	1	0	Good	1.5" or greater gap	7/2/2018	1	NO	Local
582	1	1	N/A	N/A	N/A	1	1	1	Good		7/2/2018	0	YES	Local
583	1	1	N/A	N/A	N/A	1	0	1	Good	around curve so probabky some superelevation	7/2/2018	1	NO	Local
584	1	1	N/A	N/A	N/A	1	1	1	Good		7/2/2018	0	YES	Local
585	1	1	1	N/A	N/A	1	1	0	Good	1.5" or greater gap	7/2/2018	1	NO	Local

OBJECTID	Is the route stable, firm and slip-resistant?	Is the route at least 48in wide?	If the sidewalk is 200ft or more by 60in of less, is there a 60 in by 60in passing space?	If there are grates or openings are the openings 0.5 in or less?	Is the long dimension of grate opening perpendicular to the direction of travel?	Is the Running slope 5.0% or less?	Is the cross slope	Are there no gaps in elevation or distance between concrete panels >1.5"?	What is the overall condition of the sidewalk?	Notes	EditDate	# Non Compliant	Compliant	Jurisdiction
586	1	1	N/A	N/A	N/A	1	1	1	Good		7/2/2018	0	YES	Local
587	1	1	N/A	N/A	N/A	1	1	1	Good		7/2/2018	0	YES	Local
588	1	1	N/A	N/A	N/A	1	1	1	Good		7/2/2018	0	YES	Local
589	1	1	N/A	N/A	N/A	1	1	0	Good	1.5" or greater gap.	7/2/2018	1	NO	Local
590	1	1	N/A	N/A	N/A	1	0	1	Good		7/2/2018	1	NO	Local
591	1	1	N/A	N/A	N/A	1	1	1	Good		7/2/2018	0	YES	Local
592	1	1	1	N/A	N/A	1	1	0	Good	1.5" or greater gap.	7/2/2018	1	NO	Local
593	1	1	N/A	N/A	N/A	1	1	1	Good		7/2/2018	0	YES	Local
594	1	1	N/A	N/A	N/A	1	1	1	Good		7/2/2018	0	YES	Local
595	1	1	N/A	N/A	N/A	1	1	1	Good		7/2/2018	0	YES	Local
596	1	1	1	N/A	N/A	1	1	1	Good		7/2/2018	0	YES	Local
597	1	1	N/A	N/A	N/A	1	1	1	Good		7/2/2018	0	YES	Local
598	1	1	1	N/A	N/A	1	1	1	Good		7/2/2018	0	YES	Local
599	1	1	N/A	N/A	N/A	1	1	1	Good		7/2/2018	0	YES	Local
600	1	1	N/A	N/A	N/A	1	1	1	Good		7/2/2018	0	YES	Local
601	1	1	1	N/A	N/A	1	1	0	Good	1.5" or greater gap	7/2/2018	1	NO	Local
602	1	1	N/A	N/A	N/A	1	1	1	Good		7/2/2018	0	YES	Local
603	1	1	N/A	N/A	N/A	1	1	1	Good		7/2/2018	0	YES	Local
604	1	1	N/A	N/A	N/A	1	1	1	Good		7/2/2018	0	YES	Local
605	1	1	N/A	N/A	N/A	1	1	1	Good		7/2/2018	0	YES	Local
606	1	1	N/A	N/A	N/A	1	1	1	Good		7/2/2018	0	YES	Local
607	1	1	N/A	N/A	N/A	1	1	1	Good		7/2/2018	0	YES	Local
608	1	1	N/A	N/A	N/A	1	1	1	Good		7/2/2018	0	YES	Local
609	1	1	N/A	N/A	N/A	1	1	1	Good		7/2/2018	0	YES	Local
610	1	1	N/A	N/A	N/A	1	1	1	Good		7/2/2018	0	YES	Local
611	1	1	N/A	N/A	N/A	1	1	1	Good		7/2/2018	0	YES	Local
612	1	1	1	N/A	N/A	1	1	1	Good		7/2/2018	0	YES	Local
613	1	1	1	N/A	N/A	1	1	1	Good		7/2/2018	0	YES	Local
614	1	1	1	N/A	N/A	1	1	1	Good		7/2/2018	0	YES	Local
615	1	1	0	N/A	N/A	1	1	1	Good		7/2/2018	1	NO	Local

TOTAL:	601
# Compliant:	162
% Compliant:	27%

East Grand Forks ADA Transiton Plan- Bus Shelter Stops

Updated May 2019

OBJECTID	BS_ID	Compliant	Location	Access_Rou	Board_Ligh	Slip_Resis	Perp96inWi	Para60inWi	ParaSlopeM	PerpSlope2	Route_Sign	Shelter	Access_She	Shelter30x	Adj_PAR	SheltFloor	SheltAppr3	Condition
1	BS_01	No	Across from Campbell Library	Y	Y	Y	Y	Y	Y	N	Y	Y	Y	Y	Y	Y	Y	FAIR
2	BS_02	No	Sunshine Terrace	Y	Y	Y	Y	Y	Y	N	Y	Y	Y	Y	Y	Y	Y	FAIR
3	BS_03	No	20th St NE by Tech College	Y	Y	Y	Y	Y	Y	N	Y	Y	Y	Y	Y	Y	Y	GOOD
4	BS_04	Yes	5th Ave NE by Itts William Park	Y	Y	Y	Y	Y	Y	Y	Y	Y	Y	Y	Y	Y	Y	GOOD
5	BS_05	No	5th Ave NE by Apartments	Y	Y	Y	Y	Y	Y	N	N	Y	Y	Y	Y	Y	Y	POOR
7	BS_07	No	3rd Ave NW	Y	Y	Y	Y	Y	N	N	Y	Y	Y	Y	Y	Y	Y	POOR

TOTAL:	6
# Compliant:	1
% Compliant:	17%

Curb Ramps

TOTAL:	937
# Compliant:	158
% Compliant:	17%

Overall Compliance

TOTAL:	1582
# Compliant:	344
% Compliant:	22%

Sidewalk

TOTAL:	601
# Compliant:	162
% Compliant:	27%

Bus Shelter Stops

TOTAL:	6
# Compliant:	1
% Compliant:	17%

APS

TOTAL:	44
# Compliant:	24
	0
% Compliant:	55%

System Correction	Unit Cost	Unit	# of non-compliant points collected	% Compliant	Cost
Replace Existing Curb Ramp	$2,500.00	EA	779	17%	$1,947,500.00
Replace Concrete Sidewalk	$10.00	SF	439	27%	$4,390.00
Replace Accessible Pedestrian Signal	$1,500.00	EA	20	55%	$30,000.00
		TOTAL:	1,238		$1,981,890.00

Curb Ramps: $1,750 - $2,500 each ramp
Sidewalk: $8 - $10 per SF 4" concrete
APS: $8,000 -$12,000 (low end is for adding 8 APS buttons, the high end is for including buttons and ped stations
Based on an 8 button intersection
All cost estimates were based on information used in 2018 Moorhead ADA Transition Plan

Bus Shelter Stops

System Correction	Unit Cost	Unit	# of non-compliant points collected	Cost
Replace Curb & Gutter	$60.00	LF	120	$7,200.00
Replace Concrete Sidewalk	$10.00	SF	1000	$10,000.00
Replace Detectable Warning Panel	$500.00	EA	6	$3,000.00
Total				**$20,200.00**

Grand Forks-East Grand Forks Metropolitan Planning Organization

City of East Grand Forks

ADA Transition Plan

PUBLIC MEETING – October 4, 2018

WELCOME AND INTRODUCTIONS

Joe Kapper, AICP
Project Manager

Jamie Wark
Management Systems/GIS

Agenda
Informational Meeting on ADA Transition Plan

- ADA Transition Plan – Purpose and Overview
- Project Activities
- Priority Areas
- Discussion

ADA Transition Plan

Why complete an ADA Transition Plan?

- Americans with Disabilities Act (ADA) – enacted in 1990 with regulations in effect since 1992
- Title II Applies to Public Services – State/Local Government
  - Bars discrimination against qualified individuals with disabilities
  - Requires maintenance of accessible features
  - Must provide equal access to programs and services
- Includes **Transportation Services and Programs**
  - Public Right-of-Way – City owned infrastructure that serves a transportation purpose
- Federal Regulations Require a Self-Evaluation

Transition Plan Requirements

- Required of public entities that employ at least 50 persons (§ 28 CFR 35.150(d))
- Purpose:
  - To set forth steps necessary to complete modifications identified through self-evaluation (those areas not covered by a previous plan)
  - Provide a schedule for completing the modifications
- What's Included:
  - Identify physical obstacles in the public entity that limit accessibility
  - Describe in detail the methods to make facilities accessible
  - Specify the schedule for achieving compliance
  - Identify ADA Coordinator and public process

Self Evaluation and Transition Plan

- Evaluates current services, policies, and practices and make necessary modifications to meet requirements
- Provide an opportunity to interested persons to participate in self-evaluation process by submitting comments
- Maintain on file and make available for public inspection for at least 3 years following self-evaluation

Self-Evaluations

Purpose:

- To identify barriers in programs and activities that prevent persons with disabilities from access

What to evaluate:

- All programs and facilities that require public access
- Public right-of-way
- Parks and Trails
- Barriers to Accessibility
- Critical Areas

City of East Grand Forks

ADA Transition Plan Activities

Data Collection

- Developed Field Manual guide
- Used hand held mobile device with GPS capabilities to collect data on public rights-of-way
- Data inventory is available today

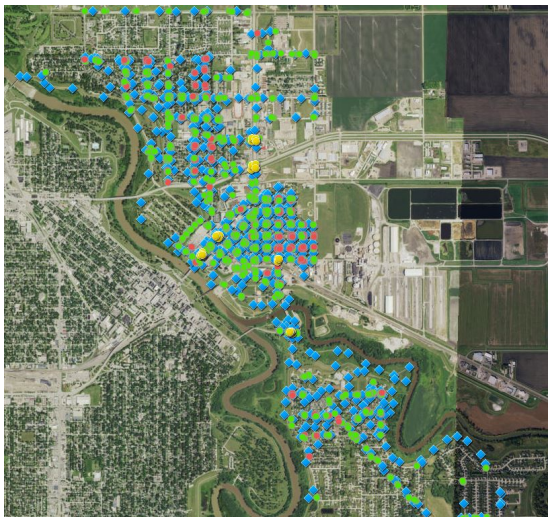

Data Collection

601 Sidewalk Points

937 Curb Ramps

44 Pedestrian Signals

Review of City Policies

Self-Evaluation

- 27% of sidewalks are ADA compliant
- 17% of curb ramps are ADA compliant
- 55% of accessible pedestrian signals are ADA compliant

Plan Elements

- Establish formalized grievance procedure
- Prioritize improvements for incorporation into Capital Improvement Program
- Set goals for ADA compliance – typically communities set a goal that corresponds to their schedule for street reconstruction or other projects (example: 10, 20, 30, 40 years)
- Establish local ADA Coordinator (Nancy Ellis)

Example Community Priorities

- Geographic
  - Medical Centers, Schools, Transit Facilities, Government Buildings, Non-Auto Dependent Households or similar facilities
- Condition
  - Missing Curb Ramps
  - Poor Slopes
  - Insufficient Lands or Obstructions

Discussion Questions

- What is your experience with accessibility in East Grand Forks? What are some of the most critical issues?
- How do you feel the City of East Grand Forks is doing in terms of meeting the requirements of ADA?
- Do you have any recommendations? How should we focus our efforts?
- What do you think specific priority areas should be?

Thank You!

Joseph Kapper, AICP
SRF Consulting Group, Inc.
jkapper@srfconsulting.com

SIGN-IN SHEET

Page ____ of ____

	LPA/Consultant/Transit GF-EGF MPO [redacted]	
Meeting Location ~~Grand Cities Mall~~ East Grand Forks City Hall	Meeting Type Open House / Focus Group	Meeting Date ~~05/08/2018~~ 10/4/2018
Project Number		PCN
Project Description ~~Proposed Bus Routes for Grand Forks & East Grand Forks~~ ADA Right-of-Way Transition Plan		

Name (Please print) Corey Birtzbolz	Title/Representing Options		
Address 318 3rd St NW	City EGF	State MN	ZIP Code 56721
Email Address corey@myoptions.info			

Name (Please print) Nancy Ellis	Title/Representing Comm. Dev. Director		
Address 600 DeMers Ave	City EGF	State MN	ZIP Code 56721
Email Address nellis@egf.mn			

Name (Please print) JAIRO VIAFARA	Title/Representing MPO —		
Address 600 DeMers AV.	City EGF-GF	State MN	ZIP Code
Email Address			

Name (Please print)	Title/Representing		
Address	City	State	ZIP Code
Email Address			

Name (Please print)	Title/Representing		
Address	City	State	ZIP Code
Email Address			

Name (Please print)	Title/Representing		
Address	City	State	ZIP Code
Email Address			

Name (Please print)	Title/Representing		
Address	City	State	ZIP Code
Email Address			

Client:

GRAND FORKS/EGF MPO

Account # 127088 Ad # 2682227

Phone: (701) 746-2660

Fax:

Address: PO BOX 5200

GRAND FORKS, ND 58206-5200

Sales Rep.:

0108 Kristoffer Adamson

Phone: (888) 857-1920

Fax:

Email: kadamson@classifiedsfcc.com

Class.: 0020 PUBLIC NOTICE

Requested By:

Start Date: 09/23/2018

End Date: 10/04/2018

Nb. of Inserts: 13

Dimensions: 2 col. x 73.00 7 PT LINES

Publications: Grand Forks Herald

grandforksherald.com

Total Price: $209.75

Paid Amount: $0.00

Balance: $209.75

PUBLIC INPUT NEEDED

ADA Transition Plan Open House

The Grand Forks-East Grand Forks Metropolitan Planning Organization (MPO) and the City of East Grand Forks is preparing an ADA Transition Plan for the City Of East Grand Forks. The Plan will:

- Establish a methodology for evaluation of Public Right-Of-Way,
- Evaluate the Public Right-Of-Way for ADA compliance,
- Establish contacts of responsible City Staff,
- Establish City Policies and Practices in reference to ADA, and
- Establish a prioritization plan and improvement schedule.

The public is encouraged to attend the Open House to provide input and feedback on issues or priorities when it comes to accessibility to Public Rights-Of-Way.

ADA Transition Plan Public Open House

October 4th, 2018
East Grand Forks City Hall
Training Room
600 DeMers Ave
5:00 PM to 6:30 PM

For more information regarding the ADA Transition Plan, please contact:

Teri Kouba, GF-EGF MPO
teri.kouba@theforksmpo.org

The GF-EGFMPO will make every reasonable accommodation to provide an accessible meeting facility for all persons. Appropriate provisions for the hearing and visually challenged or persons with limited English Proficiency (LEP) will be made if the meeting conductors are notified 5 days prior to the meeting date, if possible. To request language interpretation, an auxiliary aid or service (i.e., sign language interpreter, accessible parking, or materials in alternative format) contact Earl Haugen of GF-EGFMPO at 701-746-2660. TTY users may use Relay North Dakota 711 or 1-800-366-6888. Materials can be provided in alternative formats: large print, Braille, cassette tape, or on computer disk for people with disabilities or with LEP by Earl Haugen of GF-EGFMPO at 701-746-2660. TTY users may use Relay North Dakota 711 or 1-800-366-6888.

PUBLIC INPUT NEEDED

ADA Transition Plan Open House

The Grand Forks-East Grand Forks Metropolitan Planning Organization (MPO) and the City of East Grand Forks is preparing an ADA Transition Plan for the City Of East Grand Forks. The Plan will:

- Establish a methodology for evaluation of Public Right-Of-Way,
- Evaluate the Public Right-Of-Way for ADA compliance,
- Establish contacts of responsible City Staff,
- Establish City Policies and Practices in reference to ADA, and
- Establish a prioritization plan and improvement schedule.

The public is encouraged to attend the Open House to provide input and feedback on issues or priorities when it comes to accessibility to Public Rights-Of-Way.

ADA Transition Plan Public Open House

October 4th, 2018
East Grand Forks City Hall- Training Room
600 DeMers Ave
5:00 PM to 6:30 PM

For more information regarding the ADA Transition Plan, please contact:

Teri Kouba, GF-EGF MPO – teri.kouba@theforksmpo.org

The GF-EGFMPO will make every reasonable accommodation to provide an accessible meeting facility for all persons. Appropriate provisions for the hearing and visually challenged or persons with limited English Proficiency (LEP) will be made if the meeting conductors are notified 5 days prior to the meeting date, if possible. To request language interpretation, an auxiliary aid or service (i.e., sign language interpreter, accessible parking, or materials in alternative format) contact Earl Haugen of GF-EGFMPO at 701-746-2660. TTY users may use Relay North Dakota 711 or 1-800-366-6888. . Materials can be provided in alternative formats: large print, Braille, cassette tape, or on computer disk for people with disabilities or with LEP by Earl Haugen of GF-EGFMPO at 701-746-2660. TTY users may use Relay North Dakota 711 or 1-800-366-6888.

CITY OF EAST GRAND FORKS

ADA TRANSITION PLAN AND SELF-EVALUATION

2018

This publication can be made available in alternative formats upon request such as Braille, large print, audiotape, or computer disk. Requests can be made by calling 218-773-2208 (voice) or e-mailing the ADA Coordinator at nellis@egf.mn Please allow five (5) days for your request to be processed.

www.egf.mn

AMERICANS WITH DISABILITIES ACT

TRANSITION PLAN

Final Plan Adopted _____

Mayor – Steve Gander

City Councilmembers
Clarence Vetter – First Ward
Mike Pokrzywinski – Second Ward
Tim Riopelle – Third Ward
Henry Tweten – Fourth Ward
Mark Olstad – Fifth Ward
Chad Grassel – At Large
Marc DeMers – At Large

Americans With Disabilities Act (ADA)
Coordinator Nancy Ellis

TABLE OF CONTENTS

SUMMARY Page 3

SECTION I. CITY OF EAST GRAND FORKS AND THE ADA

A. Legislative Mandate Pages 4 – 5

B. ADA Self-Evaluation and Transition Plan Procedure Pages 6 – 11

C. ADA Definitions Pages 12 – 14

SECTION II. ADA SELF-EVALUATION FINDINGS

A. Coordinated Human Services Committee (CHSC) Page 15

B. Findings Pages 16 – 24

SECTION III. ADA TRANSITION PLAN FOR FACILITIES, PROGRAMS & SERVICES

A. Transition Plan Overview Page 25

B. Self-Evaluation Priority Information Page 26

C. Self-Evaluation Priority Listings Pages 27 – 30

D. Transition Plan and Schedule for Improvements Page 31

E. Transition Plan Action Items Pages 32 – 33

SECTION IV. CHARTING THE COURSE: CONCLUSION Page 34

SECTION V APPENDICES Pages 35 – 103

Appendix A: ADA Self-Evaluation Questionnaire Numbering System
Appendix B: Self-Evaluation Questionnaire Responses
Appendix C: Self-Evaluation Team Members
Appendix D: ADA Reasonable Accommodation Policy
Appendix E: ADA Reasonable Accommodation Resolution Form
Appendix F: ADA Grievance Procedure
Appendix G: ADA Public Notice
Appendix H: ADA Notification of Printed Information Statement
Appendix I: ADA Public Accommodation Form
Appendix J: ADA Coordinator Duties and Responsibilities

SUMMARY

The Americans with Disabilities Act of 1990 (ADA) is a comprehensive civil rights law enacted to prohibit discrimination and ensure equal opportunities for individuals with disabilities in employment, State and local government services, public accommodations, commercial facilities, and transportation. This Self-Evaluation and Transition Plan was prepared in accordance with Title II of the ADA, which prohibits discrimination against individuals with disabilities in the provision of State and local government services or activities.

Title II requires that public entities identify and evaluate all programs, activities, and services and review all policies, practices, and procedures governing their administration.

The Plan describes the process the City of East Grand Forks (City) used to evaluate its services, facilities, programs, and city parking lots in order to develop policy recommendations necessary to ensure and improve accessibility.

The Plan will assist the City in identifying policy, programmatic, and physical barriers to accessibility and in developing solutions for their removal. The Plan will guide the planning and implementation of necessary program and facility modifications over the next three (3) years.

SECTION I-A CITY OF EAST GRAND FORKS AND THE ADA

LEGISLATIVE MANDATE

TITLE II: STATE & LOCAL GOVERNMENT PROGRAMS & SERVICES

Requires full access to state and local government services and activities for individuals with disabilities.

The goal of providing equal opportunities to all individuals underlies the requirements of the ADA. The ADA does not require equal treatment, which can in fact lead to discrimination against individuals with disabilities, but instead requires modifications to ensure individuals with disabilities enjoy equal access to programs and facilities. Title II covers programs, activities, and services of public entities, including the City.

Title II is based *on four principles:*

1. ***Policy and Operations -*** *Make reasonable modifications and accommodations to policies and practices.*
2. ***Communication -*** *Ensure effective communication with individuals with disabilities affecting hearing, vision, or speech, including through the provision of auxiliary aids and services.*
3. ***Integration -*** *Offer services in the most integrated setting appropriate to the needs of individuals with disabilities.*
4. ***Physical Access -*** *Meet accessibility standards for new and altered buildings and ensure that programs are accessible as a whole.*

Title II provides that the City may not, either directly or through contractual arrangements, do any of the following:

Deny individuals with disabilities the opportunity to participate as members of advisory boards and commissions.

Deny individuals with disabilities the opportunity to participate in services, programs, or activities that are offered to others, even if the City offers permissibly separate or different activities.

In determining the location of facilities, make selections that have the effect of excluding or discriminating against individuals with disabilities.

Title II requires the City to undertake five action steps:

1. Designate an official responsible for coordinating all compliance activities.
2. Provide notice to the public and employees of their rights and protections under the ADA and how the City complies.
3. Adopt and administer a grievance procedure for resolving ADA-related grievances and complaints from the public and employees.

4. Conduct a comprehensive review of policies and procedures (or Self-Evaluation) in four areas: equal employment opportunity, nondiscriminatory operation of programs and services, effective communication, and program and facility accessibility.
5. Prepare and carry out a Transition Plan of structural modifications needed to remove barriers limiting access to programs, facilities, and parking lots.

SECTION I-B CITY OF EAST GRAND FORKS AND THE ADA
ADA SELF-EVALUATION AND TRANSITION PLAN PROCEDURE

The City's ADA Self-Evaluation was organized into three main phases that incorporated the five action steps required by Title II.

Phase I: Planning and Self-Evaluation– The first phase involved planning and assessment, including formation of the ADA Task Force, identification of Accessibility Liaisons, facility inventory, creation of questionnaires, assigning of staff and subsequent data collection.

Phase II: Recommendations and Prioritization - Phase II included the following activities:

- Data analysis.
- Development of recommendations associated with the policies and procedures survey.
- Development of recommendations associated with the communications survey.
- Development of program/facility recommendations and priority system.
- Creation of database and internal website.
- Community involvement and outreach.

Phase III: Adoption and Implementation - Phase III includes the approval of recommended actions by the Mayor and City Council and implementation of the Plan.

ADA EVALUATION TASK FORCE

The Task Force provided oversight and helped to establish roles of all participants, assisted with authorizing information for the process, assembled a final report and transition plan, and prepared recommended guidelines to carry out necessary changes. The Task Force included the City's ADA Coordinator, its ADA Consultant (Options Resources Center), at least one member of the Coordinated Human Services Committee (CHSC), and a manager from the following City departments/administrations: Mayor's Office, Facilities Management, Parks & Recreation, Public Works, Water & Light, Police, Fire, and City Hall Staff. The City's Attorney serves the Task Force in an advisory capacity.

ADA SELF-EVALUATION ACCESSIBILITY LIAISONS

One accessibility liaison was assigned from each City building and directed by the ADA Coordinator to assist in the Self-Evaluation process and other compliance activities. Information collected during the Self-Evaluation process was reported via the accessibility liaisons and public input through CHSC. The following provides an overall summary of findings and recommendations.

METHODOLOGY FOR THE SELF-EVALUATION

To provide comprehensive input regarding the public's accessibility to programs, services, and activities offered by the City, the Self-Evaluation included:

a. Review of policies, procedures, and other documents;
b. Surveys of departments;
c. Staff interviews;
d. Visits to selected sites;
e. Inspections of selected sites for audit purposes;
f. Surveys of facility users;
g. Public postings and notices requesting input;
h. Presentations and collaboration with the Task Force Members, Accessibility Liaisons and CHSC; and
i. A final report and Transition Plan

ADA SELF-EVALUATION QUESTIONNAIRE TOOLS

Facility Questionnaires and site visits were used to identify barriers and recommend alterations in order to meet accessibility standards. The list of facilities surveyed included:

a. City-Owned Parks;
b. City-Owned Buildings; and
c. City Programs Housed in Leased Facilities

The Facility Questionnaires were divided into three broad categories:

- ***Exterior Accessibility:*** Individuals with disabilities should be able to approach and enter a building as freely as everyone else. For instance, at least one accessible route must be provided within the boundary of the site connecting elements such as accessible parking and access to building entrances.

- ***Interior Accessibility:*** The interior accessible route connects the accessible entrance with the program and services area. Typically, interior accessible routes are made up of hallways, corridors, and interior rooms and spaces. The accessible route is essential for people who have difficulty walking or who use wheelchairs or other mobility aids to access the services and programs areas.

  Additionally, blind individuals or those with low vision may walk along any route to access the programs and services areas, not just the accessible routes. As such, routes open to or leading to the service area, such as hallways, corridors, and service and program spaces must be free of objects that cannot be detected by a person who is blind or visually impaired.

- ***Program Accessibility:*** The City's services, programs, or activities, when viewed in their entirety, must be readily accessible to and usable by individuals with disabilities. This standard, known as "program accessibility," applies to all existing City facilities. Questionnaire results form the basis of this Plan and strategy for remediation or resolution of identified barriers.

Specific Questionnaires were also created for program, policy/procedure, and communication compliance. These questionnaires solicited information on how City departments communicate with the public, and how policies and procedures might adversely affect the disabled community, or provide for their inclusion in City programs and services as required under the ADA. These questionnaires also enabled the city to identify the differences among City departments and buildings.

COMMUNITY INVOLVEMENT AND PUBLIC OUTREACH

A key element of the Self-Evaluation Process has been and remains participation of the public. Participation from disabled individuals in the community helped identify key issues that may not be readily apparent to City staff. Their perspectives on the impact of barriers to program access are essential to the accuracy of our findings.

The City's Coordinated Human Services Committee (CHSC) took the lead role on the public outreach portion of this Plan. The Public Input Questionnaire was placed on the City's website, and public meetings were held. City staff and CHSC members facilitated the Public meetings.

Public participation included individuals with disabilities, Community Disability Partner agencies, and senior citizens. The format and content of the Plan was discussed. Questions and comments were received regarding specific facilities, parks, programs, City maintenance issues, staff training, communication between City departments, and ADA code questions such as parking spaces and building standards.

CITY OF EAST GRAND FORKS PRIORITY SYSTEM FOR ADA COMPLIANCE

The Department of Justice (DOJ) recommended priority system was used to implement recommendation(s) for ADA barrier removal. The primary prioritization system, meaning criteria by which recommendations are ordered, **is at the discretion of the City.**

As part of Phase II, recognizing that the City has limited funds and cannot immediately make all programs, services, buildings, and facilities fully accessible, the following primary criteria were used as the basis for prioritizing removal of identified barriers:

- Priority One: Critical nature of the facilities hosting essential services related to health and safety and programs that are unique to a location.
- Priority Two: Facilities that receive a high level of public use.
- Priority Three: Geographic distribution - facilities that are distributed throughout the city can ensure maximum access for all residents.

A secondary prioritization system for program-based barrier removal actions was used to prioritize any remedial actions if needed.

The Department of Justice criteria listed below was used to assist in the determination of specific program-based barrier removal actions within a building or facility, on a secondary basis to the primary criteria noted above.

- **Priority One:** The highest priority is placed on those barrier removal items that provide accessibility at the main entrance of a facility or improve a path of travel to the portion of the facility where program activities take place (e.g., parking, walks, ramps, stairs, doors, corridors, etc.).
- **Priority Two:** A second level priority is placed on those barrier removal items that improve or enhance access to program use areas (e.g. transaction counters, conference rooms, public offices, restrooms, etc.).
- **Priority Three:** A third level priority is placed on those barrier removal items that improve access to amenities serving program areas (e.g., drinking fountains, telephones, site furnishings, vending machines).

OUTCOME OF THE ADA TRANSITION PLAN UPDATE PROCESS

The Mayor, City Council and City staff are demonstrating, through this Plan, their commitment to inclusion in public programs and facilities, as well as a dedication to transparency in government and to sustaining a high quality of life for City residents and visitors. The use of an ongoing ADA compliance monitoring system, coupled with increased community outreach and involvement, will ensure that the City will be a leader in the effort to comply with the ADA.

TIME FRAME FOR SELF-EVALUATION PROCESS				
Actions	**Steps**	**Responsible Individual / Department**	**Target Start Date**	**Completion Date**
City's ADA Self-Evaluation planning process beginning.	1	ADA Coordinator/ CHSC	(August)	(September)
Gather resources and information to determine scope of ADA Self-Evaluation Process.	2	ADA Coordinator/ CHSC	(October)	(September)
ADA Self-Evaluation process presentation to City Management Team and formation of City ADA Task Force Committee.	3	ADA Coordinator/ City Staff / City ADA Consultant	(October)	(October)
ADA Self-Evaluation memorandum sent out from Mayor's Office requesting department contacts for Task Force and Accessibility Liaisons.	4A	Mayor's Office	(October)	(October)
Public announcement about starting City's ADA Self-Evaluation Process.	4A	Mayor's Office	(November – December)	(December)
ADA Self-Evaluation process team formation.	4B	ADA Coordinator	(December)	(December)
ADA Self-Evaluation training meetings on ADA and process.	4C	ADA Coordinator/ ADA Consultant/ CHSC	(December)	(December)
ADA Self-Evaluation website development.	4D	Human Resources Departments	(January)	(January)
ADA Self-Evaluation Questionnaires/ Checklists distributed.	4E	ADA Coordinator/ Accessibility Liaisons	(March)	(April)

TIME FRAME FOR SELF-EVALUATION PROCESS – CONTINUED

Actions	Steps	Responsible Individual / Department	Target Start Date	Completion Date
Return Completed Self-Evaluation from departments / programs.	4F	ADA Coordinator/ Accessibility Liaisons	(May)	(June)
Department site visit & interview Mayor and Cabinet Members.	4F	ADA Coordinator	(April)	(June)
Complete Self-Evaluation Audit of returned Questionnaires.	5	ADA Self-Evaluation Task Force	(June)	(July)
Public Input - Advocacy groups, Disability Agencies, General Public, etc.	5	ADA Coordinator/ CHSC	(April)	(July)
Establish list of ADA compliance projects and prioritize each project needing corrective action.	6	ADA Self-Evaluation Task Force	(October)	(January)
Work on final report and Transition Plan and get public input.	7	ADA Self-Evaluation Task Force / CHSC	(February-April)	(August)
Mayor review and approval.	8	Mayor's Office	(August)	(September)
City Council review and approval & adoption.	9	City Council Office	(October)	(November)
Public release of final report and transition plan.	10	Mayor's Office	(November)	(December)

SECTION I-C CITY OF EAST GRAND FORKS AND THE ADA

ADA DEFINITIONS

The following is a summary of many definitions found in the ADA and implementing regulations. Please refer to the Americans with Disabilities Act for the full text of definitions and explanations.

DISABILITY

The term *disability* means, with respect to an individual:

1. A physical or mental impairment that substantially limits one or more of the major life activities.
2. A record of such impairment.
3. Being regarded as having such impairment.

QUALIFIED INDIVIDUAL WITH A DISABILITY

A *qualified individual with a disability* means an individual with a disability who, with or without reasonable modification to rules, policies, or practices; the removal of architectural, communication, or transportation barriers; or the provision of auxiliary aids and services, meets the essential eligibility requirements for the receipt of services or the participation in programs or activities provided by the City.

DISCRIMINATION ON THE BASIS OF DISABILITY

Discrimination on the basis of disability means to:

- Limit, segregate, or classify an individual in a way that may adversely affect opportunities or status because of the individual's disability.
- Limit, segregate, or classify a participant in a program or activity offered to the public in a way that may adversely affect opportunities or status because of the participant's disability.
- Participate in a contract that could subject a qualified individual with a disability to discrimination.
- Use standards, criteria, or methods of administration that have the effect of discriminating on the basis of disability.
- Deny equal benefits because of a disability.
- Fail to make reasonable accommodations to known physical or mental limitations of an otherwise qualified individual unless it can be shown that the accommodation would impose an undue burden on the City's operations.
- Use selection criteria that exclude otherwise qualified individuals with disabilities from participating in the programs or activities offered to the public.
- Fail to use tests, including eligibility tests, in a manner that ensures the test results accurately reflect the qualified applicants skills or aptitude to participate in a program or activity.

PHYSICAL OR MENTAL IMPAIRMENTS

Physical or mental impairments may include, but are not limited to: vision, speech, and hearing impairments; emotional disturbance and mental illness; seizure disorders; cognitive illness; orthopedic and neuromotor disabilities; learning disabilities; diabetes; heart disease; nervous conditions; cancer; asthma; hepatitis B; HIV infection (HIV condition); and drug addiction if the addict has successfully completed or is participating in a rehabilitation program and no longer uses illegal drugs.

SUBSTANTIAL LIMITATION OF MAJOR LIFE ACTIVITIES

An individual is disabled if she or he has a physical or mental impairment that (a) renders her or him unable to perform a major life activity, or (b) substantially limits the condition, manner, or duration under which she or he can perform a particular major life activity in comparison to other people.

Major life activities are functions such as walking, seeing, hearing, speaking, breathing, learning, performing manual tasks, or caring for oneself. In determining whether a physical or mental impairment substantially limits the condition, manner, or duration under which an individual can perform a particular major life activity in comparison to other people, the following factors shall be considered:

1. The nature and severity of the impairment.
2. The duration or expected duration of the impairment.
3. The permanent or long-term impact (or expected impact) of or resulting from the impairment.

HAVING A RECORD OF IMPAIRMENT

An individual is disabled if he or she has a history of having an impairment that substantially limits the performance of a major life activity; or has been diagnosed, correctly or incorrectly, as having such impairment.

REGARDED AS HAVING A DISABILITY

An individual is *disabled* if she or he is treated or perceived as having an impairment that substantially limits major life activities, although no such impairment exists.

REASONABLE PROGRAM MODIFICATIONS

If the individuals' disabilities prevent them from performing the essential functions of the program or activity, it is necessary to determine whether reasonable program modifications would enable these individuals to perform the essential functions of the program or activity.

A reasonable program modification is any change in program or activity or in the way things are customarily done that enables an individual with a disability to enjoy equal program opportunities. Accommodation means modifications or adjustments:

- To a registration or application process to enable an individual with a disability to be considered for the program or activity.
- To the program or activity environment in which the duties of a position are performed so that an individual with a disability can perform the essential functions of the program or activity.
- That enable individuals with disabilities to enjoy equally the benefits of the program or activity as other similarly situated individuals without disabilities enjoy.

Modification includes making existing facilities and equipment used by individuals readily accessible and usable by individuals with disabilities.

Modification applies to:

- All decisions and to the application or registration process.
- All services provided in connection with the program or activity; and known disabilities only.

Modification is not required if:

- It changes the essential nature of a program or activity of the individual with a disability.
- It creates a hazardous situation.
- Adjustments or modifications requested are primarily for the personal benefit of the individual with a disability; or it poses an undue burden on the City.

UNDUE BURDEN

The City need not provide an accommodation that imposes an undue burden on the operation of its business. *Undue burden* means significant difficulty or expense incurred in the provision of accommodation. Undue burden includes, but is not limited to, financial difficulty and refers to any modification that would be unduly costly, extensive, substantial, or disruptive, or that would fundamentally alter the nature of City operations. Whether a particular accommodation will impose an undue hardship is determined on a case-by-case basis. If a particular modification is determined to cause an undue burden the City shall attempt to identify another modification that would not pose such a burden. If cost causes the undue burden, the City must consider whether funding for the modification is available from an outside source. If no such funding is available, the City must give the individual with a disability the opportunity to provide the modification or to pay for that portion of the modification that constitutes an undue burden.

AUXILIARY AIDS AND SERVICES

The term auxiliary aids and services includes:

1. Qualified interpreters or other effective methods of making orally delivered materials available to individuals with hearing impairments.
2. Qualified readers, taped texts, or other effective methods of making visually delivered materials available to individuals with visual impairments.
3. Acquisition or modification of equipment or devices; and other similar services and actions.

CITY OF EAST GRAND FORKS COORDINATED HUMAN SERVICES COMMITTEE (CHSC)

CHSC comprises a group of residents appointed by the Mayor with advice and consent of City Council. The function of CHSC is to advise City Council on issues and advocate on behalf of individuals with disabilities. CHSC provides guidance and advises the City on issues concerning the needs and rights of individuals with disabilities to ensure their full participation in and enjoyment of the City's facilities, programs and services.

The primary areas CHSC addresses are:

COMPLIANCE

CHSC provides guidance to the City when implementing laws and regulations affecting individuals with disabilities, including the ADA and related legislation.

AWARENESS

CHSC assists residents and community groups to raise awareness of the opportunities in the City available to disabled residents and visitors.

HOUSING

CHSC works with the City on housing issues, including modifications and reasonable accommodations for accessible living.

TRANSPORTATION AND PARKING

CHSC addresses the concerns of residents who use downtown transit and parking on an ongoing basis. Members work with City government on issues related to transportation for our residents and visitors.

LEISURE AND FITNESS

The City offers excellent leisure, fitness, sports and recreational opportunities for residents and visitors. CHSC works to ensure the accessibility of these functions and facilities, and counsels on accessibility for commercial endeavors and co-sponsored events and visitors. CHSC advocates for accessibility to parks, playgrounds, and other recreation facilities and functions.
CHSC also advises on accessibility of commercial endeavors and co-sponsored events.

SECTION II-B ADA SELF-EVALUATION FINDINGS

The City completed a Self-Evaluation of the accessibility of all City programs. The multi-format questionnaires were used by the Accessibility Liaisons in all City buildings. The results of those questionnaires are in the Appendix section of this Plan.

The Self-Evaluation required and involved the participation of staff from each City building. The City held a monthly meeting with ADA Task Force members, Department Accessibility Liaisons, its ADA Consultant and CHSC members.

A total of sixteen Self-Evaluation questionnaires were used. Those questionnaires were based on recommendations from the Department of Justice, City's ADA Coordinator and CHSC members. Each gathered data as to whether each department's programs are accessible to individuals with disabilities.

The Questionnaires included a review of the following information:

- Program or service descriptions, including its activities, and all written and unwritten rules or regulations governing the program.
- Program or service eligibility requirements.
- A characterization of program or service participants, along with a description of any participation requirements, and any adaptations made to assist individuals with disabilities.
- A list of facilities where programs or services take place.
- A summary of program providers' training and experience working with individuals with disabilities.
- A summary of ADA compliance requirements for concessionaires/special recreation operators and other permits or special events.
- A summary of transportation procedures and methods used to accommodate individuals with disabilities.
- A summary of communication procedures in the area of audio/visual presentations, telephone communication, participant notifications, and documents/publications, including any modifications or equipment used to accommodate individuals with disabilities.
- A description of emergency evacuation procedures designed to accommodate individuals with disabilities.
- The methods used to ensure that any automated electronic equipment used in a program or service is accessible to all participants.
- The methods used to ensure that all public meetings relating to a program or service are designed to accommodate individuals with disabilities.

CUSTOMER SERVICE

In-person interaction with the public is one of the primary functions of City departments. The City as a whole and several departments do not have widely understood and established procedures for determining reasonable modifications to achieve program accessibility.

Employees that reported contact with customers get little training on handling customers with disabilities.

Departments do not notify the public of their right to participate in programs and meetings, and of how to request auxiliary aids in accessible formats such as assistive listening devices or documents.

City departments have utilized some form of communication modification, such as paper and pencil or a reader, but are unaware of all of the additional options that can be offered.

Recommended Actions:

- Mandatory training for all city employees to ensure consistent flow of information.

COMMUNITY OUTREACH

ADA regulations require the City to inform the public of the rights and protections provided by the ADA. Public notification regarding events and registration does not always include non-discrimination language. Additionally, public notification does not always identify a contact person for individuals with disabilities who may request program modifications, or information on how a hearing or speech impaired person could communicate by telephone. Some departments include this language in meeting agendas, but not all.

Recommended Actions:

- Include a notice regarding the City's commitment to providing accessible services in all City publications that provide registration or general information for City services, programs, or activities. The notice should also be produced in poster-size form and placed in all City departments in a location that will maximize public exposure.
- There are occasions where non-discrimination language is included on printed agendas, but not on web versions of the meeting agendas. Nondiscrimination language should appear on both hard copies and documents posted on the web.

PRINTED INFORMATION

In order to meet the ADA's communication standards, City departments must be able to provide information in alternative formats such as Braille, large-print format, audiotape, or computer disk.

All City departments and offices produce printed information that is available to the public. While some departments distribute information about obtaining printed information in alternate formats, other departments do not.

Registration forms, permits, and waivers are only available in written form. There is inconsistency as to the availability of alternative formats of documents such as large-print and audio tapes and readers for individuals who may be unable to read the materials.

Recommended Actions:

- Provide information to each department on how to produce printed information in alternative formats for individuals with various disabilities to ensure that requests are handled in a uniform and consistent manner. Include a list of available resources for providing the services.
- Publicize the City's commitment to provide program information in alternative formats on an individual basis as requested, including large-print media and taped announcements available over the telephone.
- If required, ensure the uniformity of charges for all formats of publication.
- Include the following notice on all materials in electronic and printed form that are made available to the public: *"Individuals with disabilities, language barriers or other needs who plan to attend the meeting and will need special accommodations should contact the ADA Coordinator. Please contact us at least 48 hours before the meeting to give our staff adequate time to make arrangements. Also, materials can be provided in alternative formats: large print, Braille, cassette tape, or on computer disk for people with disabilities or with limited English proficiency (LEP) by contacting the ADA Coordinator (218)-773-2208 (voice) or e-mail nellis@egf.mn. Please allow five (5) days to process all requests prior to the meeting."*
- Identify and have available a list of interpreters, readers, etc. to be used to accommodate requests for these services.
- Handle all requests for other alternative formats or lengthy documents on an individual basis.
- Provide program, facility, permits, and reservation information in a variety of formats upon request (for example, in large-print format for persons with visual disabilities or in simple language for persons with cognitive disabilities). Provide programmatic changes (e.g., staff assistance), upon request to assist in filling out forms or when alternative formats are unavailable or infeasible.
- Provide an accessible permit, reservation, or registration system in a variety of formats. For example, provide Telephone Device for the Deaf (TDD) service for applications, reservations, and general queries.
- Produce meeting agendas and other public information distributed at meetings in alternative formats when requested.

GENERAL COMMUNICATION PUBLICITY AND ADVERTISING

Public notification regarding meetings, conferences, and other events generally does not include information regarding accessible locations and the availability of auxiliary aids. Increased outreach to persons with disabilities is needed to inform the public of the services and facilities already available and modifications that the City is required to and can provide to make its services, programs, and activities accessible.

Recommended Actions:

- Publicize efforts to increase participation by individuals with disabilities, which might include activities such as distributing program brochures to members of the disabled community.
- Develop a statement regarding accessible locations and the availability of auxiliary aids upon request that is included in all public announcements, postings for City programs, and applications, including:
  - The notice of non-discrimination.
  - Information regarding site accessibility, including the accessible bus route serving the program, facility, or event.

- The department's text telephone (TDD/TTY) number and the phone number and e-mail address of the person who can provide assistance in meeting special needs.

TELEVISED AND AUDIOVISUAL PUBLIC INFORMATION

The City Council meetings are live on Facebook, with recordings available on Facebook and YouTube. At this time

Recommended Action:

- Explore the feasibility of using closed captioning or other alternatives to audio presentations for all televised programs and for audiovisual presentations produced by the City (including videos and films) in order to ensure that persons with hearing impairments can benefit from these presentations.

CITY WEBSITE

The Internet is now a primary source of information regarding services, products, programs, and facilities. The City's website (www.egf.mn) has taken on increased importance as a communications tool.

Recommended Actions:

- Provide training to staff responsible for maintaining the City website, ensuring all are aware of the Section 508 of the Rehabilitation Act. This requirement would apply to any person in any department with authority to update any City-maintained web page.
- Additionally, the following should be done or continued:
  - Continue maintaining the current level of access on the City's website.
  - Continue soliciting feedback from the disabled community.
  - Include the City's Policy on Non-Discrimination on the Basis of Disability on the City's website.
  - List those City agencies, departments, and specialized services that offer TTY/TTD in the website telephone directory (the Contact Us web page), and include the following statement: *"The City of East Grand Forks offers Text Telephone (TTY) or Telecommunications Device for the Deaf (TDD) services for persons with speech or hearing impairments. City Staff are trained in the use of the (ND or MN) Relay System for the deaf."*
- Provide information regarding programs, facilities, permits, and reservations on the City's website in an accessible format. This information should easily be found by new web users.
- Include the City's statement regarding accessible locations and the availability of auxiliary aids upon request on its website.
- Continue monitoring the website and industry trends.
- Check the HTML address of all new City web pages and ensure that all links are kept current and working. Make sure that accessible elements are used, including alternate tags, long descriptions, and captions, as needed.
- If images are used, including photos, graphics, scanned images, or image maps, make sure to include alternate tags and/or long descriptions for each.
- If online forms and tables are used, make those elements are accessible.
- When posting documents on the City's website, provide them in HTML, a text-based format or in accessible PDF Format.

- Develop a plan for making the existing web content more accessible. Describe the City's plan on an accessible web page. Encourage input on improvements, including which pages should be given high priority for change. Let citizens know about the standards or guidelines that are being used.
- Ensure that in-house staff and consultants responsible for web page and content development are properly trained.
- Provide a way for visitors to request accessible information or services by posting a telephone number or e-mail address on the City's home page. Establish procedures to assure a quick response to users with disabilities who are trying to obtain information or services in this way.
- Periodically enlist disability organizations to test pages for ease of use; use this information to increase accessibility.
- Use services that help web page authors provide an accessible website by identifying and repairing barriers to access for individuals with disabilities.

TRAINING AND STAFFING

One of the needs most frequently identified by City departments is the need for more and improved training. Different types of training are necessary depending on the type of work and amount of public contact involved with a specific position. Standard City-wide accessibility guidelines, procedures, and trainings have not yet been developed for areas such as:

- Standardized, appropriate language for outreach and written material.
- How to acquire or use assistive devices.
- General evacuation procedures for buildings.
- A list of potential "accommodations" or program modifications that might apply.

Recommended Actions:

- Provide training to City staff who have contact with the public about modifications and using assistive devices to make programs accessible.
- Ensure that customer service training provided to City employees includes training with respect to communicating with and providing modifications for persons with a variety of disabilities. Include program-specific adaptations, assistive devices, and modifications in each department's accessibility training.
- Develop a comprehensive disability access training program.
- Educate all City staff in their responsibilities under the ADA. The City's ADA Coordinator should be responsible for ensuring that staff members receive training. Reference materials that address special modifications should be included in this training.
- Develop standard guidelines for outreach and written materials. These guidelines should include standard language that appropriately describes the City's policies on inclusion and non-discrimination, and staff members should receive training in using the guidelines effectively.
- Provide all City staff with ongoing awareness and sensitivity training. This training should include disability etiquette, and have a section that interacts with individuals with disabilities since it's helpful to have them as trainers.
- Widely disseminate information regarding the availability and location of City Telecommunication Devices for the Deaf (TDD), and train staff members in the use of TDD equipment or other means of communicating over the telephone with a person with a hearing disability.

- Ongoing training for design, maintenance, inspection and construction staff with respect to building codes to achieve accessibility.
- Provide City staff with training in general building evacuation procedures for assisting persons with hearing, visual, mobility, and learning disabilities in an emergency.
- Designate one employee in each building to serve as the Disability Access Liaison. To assist in this important role, the Liaison will attend periodic retraining regarding accessibility issues.

PUBLIC MEETINGS

Many City departments are responsible for holding public meetings. Generally, public meetings are held in locations that are accessible to persons with mobility impairments. However, City departments indicated that they need training on how to respond to requests for other modifications. Assistive listening systems are not routinely available at meetings.

Recommended Actions:

- Schedule public meetings in accessible locations whenever possible.
- When a fully accessible site is not available, then make reasonable modification so that an individual with a disability can participate.
- Make information available to City staff on the types of modification requests that may be made by individuals with different types of disabilities. Provide information about auxiliary aids such as different types of assistive listening systems, sign language interpreters, readers, descriptive services, and other assistive technologies like "real-time captioning." Display a notice on meeting agendas indicating the availability of accessibility modifications.
- Provide agendas in alternative formats, when requested.
- Provide flexibility in the time limit on speaking for individuals with communication difficulties.
- Provide assistive listening devices at public meetings, when requested.
- Publicize the availability of American Sign Language (ASL) interpreters in all meeting announcements. Include the following notice in all meeting publicity:
  - *"Translators, American Sign Language interpreters, and assistive listening devices for individuals with hearing disabilities will be available upon request. Please make your request at least five days prior to the meeting. If you require other modification not listed above, please contact the City ADA Coordinator at (218) 773-2208."*
- Maintain a list of on-call American Sign Language interpreters who may be brought to meetings to assist individuals with hearing impairments.
- Develop a checklist for creating accessible meetings and selecting accessible meeting spaces, and make the list available to City departments and programs.
- Prepare a list of already accessible meeting spaces to facilitate the scheduling of meetings and/or there location of meetings upon request.

PUBLIC TELEPHONES AND COMMUNICATION DEVICES

The City has a main TDD number listed on the City website. A few departments have sufficient demand to install their own TTY or TDD.

Recommended Actions:

- Have an outlet for a text telephone at each site where public phones are available.
- Train staff in use of TDD/TTYs and the North Dakota Relay System.

PURCHASING ACCESSIBLE/ADAPTIVE EQUIPMENT

Adaptive aids are devices, controls, appliances, or items that enable individuals with disabilities to improve their abilities to function independently and participate in programs, services, and activities offered by the City.

City departments are unaware of resources for purchasing equipment or supplies that would make their programs more accessible to individuals with disabilities.

Recommended Actions:

- Establish a "Resources Toolkit" of adaptive aids and human resources that will be available for use by individuals participating in City programs.
- Include information about the availability of specific equipment and/or individuals who are available to provide special services (e.g., American Sign Language (ASL) translation) in public information materials such as brochures and the City's website.
- Evaluate furniture and building materials purchases for compatibility with a wide range of disabilities.
- Select items that are easily adjustable or can be modified to accommodate a variety of physical and ergonomic needs when purchasing items such as furniture, site furnishings, and office systems.
- Include accessibility as a criterion for selecting items. Purchasing accessible equipment is a complex task, and the purchasing department is encouraged to consult appropriate experts when making large purchases.

EMERGENCY EVACUATION PROCEDURES

All City departments require established emergency evacuation procedures to safely evacuate individuals with disabilities who may need special assistance in an emergency.

Recommended Actions:

- Develop guidelines for the evacuation of individuals with disabilities in various types of emergency situations. Each department should use these guidelines to create their own emergency evacuation plans. These plans should:
    - Address what to do when an alarm is triggered.
    - Establish meeting places for assistance and evacuation chairs.
    - Provide direction on what to do if assistance is not available.
    - Establish training for the floor captains.
- Specific suggestions for evacuation plans and procedures can be found through the U.S. Access Board (www.access-board.gov/evacplan.htm) and the Emergency Procedures for Employees with Disabilities in Office Occupancies document published by FEMA and the US Fire Administration.
- Train City staff regarding emergency evacuation procedures with periodic drills, both announced and unannounced.
- Review existing emergency procedures to ensure that individuals with disabilities can be alerted and are able to summon emergency service providers. Provide all evacuation policies and

procedures in alternative formats. Explore the use of other technologies such as audible exit signs for orientation and direction.

- Departments that routinely provide emergency services should have priority for receiving equipment that accommodates alternative format communication.
- Take the necessary steps to ensure that emergency teams are aware of individuals with disabilities in their communities who may require special assistance in the event of an emergency.
- Provide American Sign Language (ASL) interpreters at emergency facilities, on an as-needed basis. To accomplish this, form a pool of interpreters as a resource from which to draw.

SERVICES PROVIDED BY CONTRACTED SERVICES

Some departments use outside contracted employees to provide services to the public.

Recommended Action:

- For those departments that use outside contracted employees to provide services to the public, a procedure should be set up to ensure that their work is consistent with City accessibility policies and standards.

SPECIAL EVENTS ON CITY PROPERTY

The City provides opportunities for private organizations to utilize its facilities for special events.

Recommended Action:

- In situations where private organizations sponsor events in City facilities, the City should require private organizations to comply with applicable ADA requirements. The City should provide a checklist and information during the application process to inform organizers of their responsibility for accessibility under the ADA. The checklist and information should be available on the City's website.

POLICY AND DOCUMENT REVIEW

Policies were reviewed to determine if City policies inadvertently discriminate against people with disabilities when accessing City services.

Recommended Actions:

- Review policies to ensure compliance on an annual basis:

INFRASTRUCTURE

The ADA Task Force worked to develop a list of initial infrastructure study areas that would provide a representative cross section of the City. The general categories included buildings, parking lots, and parks. With the exception of the ADA complaints (see below), study area locations were selected based on their current use, location, services provided, ridership, and several other factors.

BUILDINGS AND PARKING LOTS

Areas that were evaluated for each building included parking lots, path of travel from the parking lot to the building, access into the building, signage, drinking fountains, telephones, bathrooms, and counter heights.

There were several common issues observed at these buildings. They included:

- Accessible Parking - Accessible parking was either not provided, or if it was, was non-compliant.
- Accessible Paths to Building - Paths from the parking lots to the building entrances were either non-existent, or were non-compliant based on cross slopes, transitions, or the doors themselves.
- Counter Heights - Transaction areas had counters, but some were not lowered to accommodate a citizen in a wheelchair.
- Bathroom Fixtures and Stalls - Stalls and toilets were non-compliant.
- Signage - Signage for accessible parking spots and entrances were not always provided.

CITY PARKS

All parks were evaluated as part of this project. In addition to the park facilities, the associated parking lots were also assessed.

Areas that were evaluated for each park included parking lots, path of travel from the parking lot to the park facilities, access into the facilities, signage, drinking fountains, and bathrooms.

There were several common issues observed at these parks. They included:

- Accessible parking.
- Accessible paths to play area.
- Signage: signage for accessibility information was not always provided.

SECTION III-A

ADA TRANSITION PLAN FOR FACILITIES, PROGRAMS AND SERVICES

TRANSITION PLAN OVERVIEW

The Plan's goal is to:

- Improve accessibility for all citizens and visitors.
- Encourage participation from the public and disabled community.
- Educate City staff and the public on the requirements of the ADA.
- Develop a comprehensive list of any barriers.
- Provide a detailed outline of methods to remove any barriers.
- Provide a realistic schedule for the removal of barriers.
- Identify funding sources and opportunities to implement a barrier removal program.

This Plan combines the findings of the facility, program, and services questionnaires and community review. Not all barriers must be removed in order to provide program access. The first priority is to remove those barriers limiting access to programs.

In compliance with the requirements of the ADA, the City will maintain in working order equipment and features that are required to provide access to individuals with disabilities.

The ADA Task Force members set priorities for renovating facilities to bring them into compliance with ADA guidelines when needed. All facilities providing programs, activities and services by the City were listed and ranked based on the following criteria:

Program Uniqueness/Program Number: The number of programs, including those unique to a facility, give an indication of the importance of the facility to the community. Many programs that are unique to a facility cannot occur elsewhere.

Level of Use by the Public: The level of actual use by the public varies among facilities. Facilities that receive a high level of use by the public were given a higher rating.

Geographic Distribution***:*** It is important that facilities are distributed throughout the City in order to ensure maximum access. The decision-making process for assigning priorities involved several steps. All City facilities were listed and sorted according to the criteria listed above by the staff responsible for the programs that use the facilities. During this process, it was the intent of the City to identify not only locations that represent all of the programs offered by the City, but also to prioritize the best of those programs and locations for access improvements.

SECTION III-B

ADA TRANSITION PLAN FOR FACILITIES, PROGRAMS AND SERVICES

SELF EVALUATION PRIORITY INFORMATION

ADA Task Force members identified priorities for barrier removal within each facility. Barriers were assigned levels of priority using the following criteria:

- **Priority One:** Approach and Access – The City should take measures to provide access to the facility from sidewalks, parking or public transportation. These measures include, but are not limited to, installing an entrance ramp, widening entrances, and providing accessible parking spaces.

  Note - Critical nature of the service provided: Facilities providing essential services related to health and safety and programs that are unique to a building, facility, or park, and cannot occur at another location.

- **Priority Two:** Goods and Services – The City should take measures to provide access to those areas where goods and services are made available. These measures include but are not limited to adjusting the layout of display racks, rearranging tables, providing brailed and raised character signage, widening doors, providing visual alarms, and installing ramps.

  Note - Level of use by the public: Facilities that receive a high level of public use.

- **Priority Three:** Restrooms – The City should provide access to restroom facilities. These measures include but are not limited to removal of obstructing furniture or vending machines, widening of doors, installation of ramps, providing accessible signage, widening of toilet stalls and installation of grab bars.

  Note - Geographic distribution: by selecting a range of facilities that are distributed throughout the City, the City can ensure maximum access for all.

- **Priority Four:** The City will consider other reasonable measures to enhance accessibility**.**

SECTION III-C
ADA TRANSITION PLAN FOR FACILITIES, PROGRAMS AND SERVICES
SELF-EVALUATION PRIORITY LISTINGS

A. NOTIFICATION – Priority One

1. The City of East Grand Forks will adopt and post all required notices under the ADA on its website and in conspicuous locations in its public buildings.
2. Implement written procedures to inform individuals with disabilities and other interested persons about reasonable accommodation requests (internal & external) and of the existence and location of accessible programs, services, and activities.

B. ADA COORDINATOR – Priority One

The City has appointed an ADA Coordinator to oversee and coordinate the City's effort to carry out its responsibilities under the ADA, including any investigation of ADA-related complaints. The City will make available to all interested individuals the name, office address, and telephone number of the ADA Coordinator.

C. GRIEVANCE PROCEDURE (Internal and External) – Priority One

The City has developed and will adopt a grievance procedure, and distribute it to all departments and post copies of it in conspicuous locations in each of its public buildings.

D. GENERAL EFFECTIVE COMMUNICATION – Priority Two

To establish the following:

1. Develop staff training protocol and procedures.
2. Identify sources of qualified sign language and oral interpreters, qualified readers, real-time transcription services, and vendors able to prepare documents in Braille.
3. Establish written procedures/polices, with time frames, public notification process for fulfilling requests for sign language or oral interpreters, qualified readers, real-time transcription services, and documents in alternate formats, including Braille, large print, cassette tapes, and accessible electronic format (*e.g.*, HTML).
4. Designate an employee as the web accessibility coordinator for City of East Grand Forks who will be responsible for coordinating compliance requirements of Title II of the ADA, the Web Content Accessibility Guidelines (WCAG) version 2.0.
5. Adopt, implement, and post online a policy providing that the City's web pages will comply with WCAG 2.0 AA, published by the World Wide Web Consortium (W3C), Web Accessibility Initiative (WAI).
6. Distribute the compliance policy referred to in number 5 above to all employees and contractors who design, develop, maintain, or otherwise have responsibility for its websites, or provide website content, technical support, or related customer service.
7. Provide a notice, prominently and directly linked from the City's homepage, instructing visitors how to request accessible information. The link shall provide at least two methods to request accessible information, including an accessible form to submit feedback, an e-

mail address, or a toll-free phone number (with TTY) to contact personnel knowledgeable about the accessibility of the website.

8. Provide a notice, prominently and directly linked from its homepage, soliciting feedback from visitors on how to improve website accessibility. The link shall provide at least two methods to provide feedback, including an accessible form to submit feedback, an e-mail address, or a toll-free phone number (with TTY) to contact personnel knowledgeable about the accessibility of the website.

E. NEW CONSTRUCTION, ALTERATIONS AND PHYSICAL CHANGES TO FACILITIES - Priority Two

1. Any construction or alterations to City buildings and facilities by it or on its behalf will fully comply with the requirements of the ADA & implementing regulations, including applicable architectural standards.

2. To allow individuals with disabilities to fully and equally enjoy City services, programs, or activities in their entirety.

Key Points:
- **a.** Path of Travel
- **b.** Provide Access
- **c.** Frequency of Use by Public
- **d.** Signage - Directional & Informational

F. PROGRAM MODIFICATIONS (City departments) – Priority Two

To ensure that City programs, services, and activities that are operated at facilities owned or controlled by other entities, when viewed in their entirety, are readily accessible to and usable by individuals with disabilities.

Key Points:
- **a.** Path of Travel
- **b.** Provide Access
- **c.** Frequency of Use by Public
- **d.** Effective Communication
- **e.** Signage - Directional & Informational
- **f.** Geographic Distribution for Maximum Access for Residents

G. EMPLOYMENT – Priority One

To ensure City employment policies comply with Title I of the Americans with Disabilities Act and implementing regulations.

H. EMERGENCY MANAGEMENT PROCEDURES AND POLICIES - Priority One

The City Emergency Operations Plan (EOP) will comply with the ADA. To address ADA obligations of emergency management, including planning, preparedness, evacuation, shelters, medical and social services, lodging and housing programs, recovery, and rebuilding.

J. MISCELLANEOUS PROVISIONS – Priorities Two and Three

1. The City will maintain the accessibility of its programs, activities, services, facilities, and equipment, including routinely testing accessibility equipment and routinely auditing the accessibility of its programs and facilities. This provision, however, does not prohibit isolated or temporary interruptions in service or access due to maintenance or repairs.

2. The City will establish a training program on the requirements of the ADA and appropriate ways of serving individuals with disabilities for all City officials and staff. The City will make available a description of the training, method of training, accountability protocol, the agenda(s), any handouts, and the name, title, and address of the trainer(s).

CITY FACILITIES IDENTIFIED

Facility	Suggested Modifications
City Hall	(Signage)
Campbell Library	
Police Department	
Fire Station- *415 4th St NW*	
Fire Station- *243 5th Ave SE*	
Public Works Building	
Distribution Service Center	
Parks and Rec. Shop	
City Pool and Bath House	
Civic Center	
VFW Arena	
Blue Line Arena	

SECTION III-D

ADA TRANSITION PLAN FOR FACILITIES, PROGRAMS AND SERVICES

TRANSITION PLAN AND SCHEDULE FOR IMPROVEMENTS

The City will make reasonable efforts to improve the accessibility of facilities, programs, and activities. The Mayor and City Council will determine the appropriate amount to allocate each year toward this goal.

There will be times when it is infeasible to provide technical compliance, or a program will be substantially changed by making it accessible for all persons. The City will choose areas with high priority and solvability before moving on to lower priorities unless a specific request is made by the public.

Additionally, the City will follow the concept of program access under Title II of the ADA. Program Access does not necessarily require a public entity to make each of its existing facilities accessible to and usable by individual with disabilities, as long as the program as a whole is accessible. With that in mind the City will use the following schedule as a guide toward improved accessibility.

The City will implement a phased approach:

FY	Facilities	Scheduled Modifications
20__ - 20__		

FY	Program and Services Scheduled Modifications
20__ - 20__	All Staff Training (Citywide)
	Website Update to DOJ Requirements
	Public Postings (ADA Notices)
	Printed & Electronic Documents (ADA Requirements and Alternative Formats)

FY	City Policies
20__ - 20__	ADA Accommodation Requests
	Service Animals in City Facilities
	ADA Grievance Policy and Procedure
	City Limited English Proficiency (LEP)

SECTION III-E

ADA TRANSITION PLAN FOR FACILITIES, PROGRAMS AND SERVICES

TRANSITION PLAN ACTION ITEMS

Transition Plan Action Items Completed or is Ongoing	
Designate an ADA Coordinator	City Administrative Policy (___)
Public Notification of their rights under the ADA	City Administrative Policy (____)
	Poster (11" x 17") printed and posted at City Facilities.
ADA Staff Training	Process and procedure to be developed for City staff to receive training on a regular basis.
Make Reasonable Modification to Policies, Practices, or procedures to avoid discrimination.	Our City is commitment to ADA Compliance.
	Ensure that all employment practices are in compliance with the ADA and implementing regulations.
	Develop request for accommodation and complaint process for the public and City employees.
	Ensure meetings, hearings, trainings, classes, tours and events to happen in accessible locations, provide auxiliary aids and services.
	Allow service animals, mobility devices (such as wheelchairs and "other power-driven mobility devices" as appropriate.
	Provide activities in the most integrated setting when necessary for equal opportunity and participation.
Effective Communication	Establish an employee customer service guide.
	Website update to conform to current DOJ Standards.
	Ensure effective communication with individuals with disabilities.
	Provide auxiliary aids and services when necessary.
	Provide alternate formats to the public when requested.
	Provide Captioning for City live broadcast, videos and DVDS's developed by the City.
	Ensure Accessibility of electronic communications (e.g., e-mail, social networking sites).

Transition Plan Action Items Completed or is Ongoing - Continued	
Basic Access	Ensure that all City facilities are accessible.
	Ensure all programs and services will be in accessible locations and relocate as needed.
	Provide Notice of Accessible features (Signage).
	Maintain accessible features in accessible conditions by regular inspections.
	Provide enough accessible furniture and equipment to ensure opportunity for full participation.
	Ensure that all agencies/organizations that provide services on behalf of the City are not discriminating against individuals with disabilities.
	Ensure that the needs of individuals with disabilities are taken into account for evacuation of City facilities in emergency situations.
	Ensure accessible equivalent transportation when provided as part of a City activity or service.

SECTION IV
CHARTING THE COURSE: CONCLUSION

The City has renewed its commitment to the ADA. It has completed the first phase of developing and implementing a Self-Evaluation and Transition plan. With information from the public and its departments about successes and shortcomings, the City can now chart the course to full compliance. This course will require deeper analysis of some programs and activities addressed within this Plan, as well as similar evaluations of other programs, employment, IT, and facilities on an ongoing basis.

Decisions about specific actions and priorities will need to take into account the realities of staffing, time, cost, and difficulty. The City will be guided in this effort partly by the content of this Plan.

As the City moves forward in regular assessments and implementation, keeping paramount the views of the public and City management, supervisors and staff, it is on its way to **"Full Access Ahead"** for individuals with disabilities.

SECTION V
APPENDICES
APPENDIX A

ADA Self-Evaluation Questionnaires Numbering System Assignment Purposes by Department/Building

1. Quick Department Entrance Barriers Checklist
2. DOJ ADA Administrative Issues
3. DOJ General Effective Communication
4. DOJ 911 and Emergency Communication Services
5. DOJ Website Accessibility
6. DOJ Emergency Management
7. City ADA Supplemental Questionnaire
8. City Human Resources – Employment Services
9. Existing Facilities- Approach & Entrance
10. Swimming Pools
11. Play Areas
12. Boating Facilities
13. Golf Facilities
14. Public Input Questionnaire (CHSC)
15. Community Partners Input Questionnaire (CHSC)

Questionnaires can be found at the Following websites:

http://www.ada.gov/pcatoolkit/toolkitmain.htm

http://adachecklist.org/

SECTION V
APPENDICES

APPENDIX B
SELF-EVALUATION QUESTIONNAIRES NO ANSWERS RESULTS

City of East Grand Forks

ADA Self-Evaluation Questionnaire's Results

All data have been collected and placed in Spread sheets:

The data will be used to establish the following:

Priority One: Approach and Access: A public accommodation should take measures to provide access to the facility from sidewalks, parking or public transportation. **Note**-Critical nature of the service provided: Facilities providing essential services related to health and safety and programs that are unique to a building, facility, or park and cannot occur at another location.

Priority Two: Goods & Services: A public accommodation should take measures to provide access to those areas where goods and services are made available. Note- Level of use by the public: Facilities that receive a high level of public use.

Priority Three: Restrooms: A public accommodation should provide access to restroom facilities.

Priority Four: Other: A public accommodation should take any other measures

Compliance points that have been identified:

a. **Facility and Program Access**- For equal access and participation
b. **Signage**- Approach, entry and access to facilities, programs and services
c. **Door Hardware**- Entry into facilities, programs and services
d. **Alarm Systems**- Audible and Visual
e. **Training**- lack of training for all levels within city staff, etc.
f. **Title II documentation and policy**- required under the ADA law

ADA Self-Evaluation Questionnaire Answers

Yes or No or N/A

FNO	FORM NAME	QNC	QUESTIONS	YES	NO	N/A
1	**Quick Department Entrance Barriers Checklist**	1	Does Garage/lot have required number of accessible parking spaces?	-	-	-
		2	Are accessible parking spaces near main building entrance?	-	-	-
		3	Are Walkways level (44" wide minimum) or ramped (maximum 1:12)?	-	-	-
		4	Does the entrance doorway have at least a 32" wide clearance?	-	-	-
		5	Is the door threshold maximum ¼" high (1/2" if beveled)?	-	-	-
		6	Does door hardware have lever handles, pulls or push-pull activating bars?	-	-	-
		7	Are the doors easy to open (exterior doors maximum 8.5 pounds opening force, interior doors 5 pounds maximum)?	-	-	-
		8	If revolving doors used, alternate accessible entrance available?	-	-	-
		9	Is path of travel free of obstruction and at least 36" wide?	-	-	-
		10	Is floor surface stable, firm and slip resistant?	-	-	-
		11	Do obstacles (phones, fountains, etc.) protrude no more than 4"?	-	-	-
		12	If provided, minimum one public phone or water fountain accessible?	-	-	-
		13	Are elevator controls no higher than 48"?	-	-	-
		14	Are elevator markings in Braille and raised letters/numbers?	-	-	-
		15	Does elevator provide audible and visible signals?	-	-	-
		16	Floor of elevator cab is minimum 51" x 68" (door offset) or 51" x 80" (door centered)?	-	-	-
		17	Does door hardware have lever handles, pulls or push-pull activating bars?	-	-	-
		18	Do restroom entrance doors have at least 32" wide clearance?	-	-	-
		19	Is restroom large enough for wheelchair turnaround (5' diameter)?	-	-	-
		20	Does accessible stall door have a least 32" wide clearance?	-	-	-
		21	Are grab bars provided in accessible toilet stalls?	-	-	-
		22	Toilet seat top is 17 to 19" above floor?	-	-	-
		23	Sink has clear knee space under basin; exposed pipes are insulated?	-	-	-
		24	Are faucets lever-operated or push-type?	-	-	-
		25	Are soap and towel dispensers no more than 40" from the floor?	-	-	-
		26	Is there a lower counter space in reception/customer service areas?	-	-	-
		27	Do doors have at least 32" wide clearance?	-	-	-
		28	Is the door easy to open (maximum 5 pounds opening force)?	-	-	-
		29	Door threshold is maximum ¼" high (1/2" if beveled)?	-	-	-
		30	Is the path of travel between furniture at least 36"?	-	-	-

FNO	FORM NAME	QNC	QUESTIONS	YES	NO	N/A
2	**DOJ ADA Administrative Issues**	1	Does the state or local government have an ADA Coordinator?	-	-	-
		2	Does the ADA Coordinator have the time and expertise necessary to coordinate the government's efforts to comply with and carry out its responsibilities under the ADA?	-	-	-
		3	Does the ADA coordinator actually carry out these duties?	-	-	-
		4	Does the ADA Coordinator investigate all complaints communicated to the government alleging that the government does not comply with the ADA?	-	-	-
		5	Does the government make available to all interested people the name, office address, and telephone number of the ADA Coordinator?	-	-	-
		6	Does the state or local government make information available to the general public regarding the fact that the ADA applies to the services, programs, and activities of the government?	-	-	-
		7	Does the state or local government use the Department of Justice's model "Notice Under the Americans with Disabilities Act" or a similarly comprehensive notice?	-	-	-
		8	Does the state or local government post this information in public areas or make it available in other ways as deemed necessary by the head of the government entity to inform people of the protections of the ADA?	-	-	-
		9	Is the ADA notice available in alternate formats, i.e., large print, Braille, audio format, accessible electronic format (e.g., via email, in HTML format on its website)?	-	-	-
		10	Does the state or local government have a grievance procedure?	-	-	-
		11	Does the local government use the Department of Justice's model "Grievance Procedure under the Americans with Disabilities Act" or a similarly comprehensive grievance procedure (i.e., a grievance procedure for complaints made by any member of the public under the ADA related to any program, service, or activity)?	-	-	-
		12	Is the grievance procedure available in alternate formats?	-	-	-

FNO FORM NAME		QNC QUESTIONS		YES	NO	N/A
3	**DOJ General Effective Communication**	1	Does each department of your state or local government have a policy and procedures in place to deal with requests from the general public for sign language, oral, and cued speech interpreters?	-	-	-
		2a	Specify that sign language, oral, and cued speech interpreters can be obtained within a short period of time when necessary? (For example, when needed for hospital emergency rooms, interpreters should be available either in person or by using video relay systems within a reasonable period of time, 24 hours a day, 7 days a week, in this setting, reasonable usually means within an hour of a request. In non-emergency situations, a public entity can require reasonable advance notice for interpreter requests.)	-	-	-
		2b	Make clear that it is generally inappropriate to request family members and companions of deaf persons to serve as sign language interpreters?	-	-	-
		2c	Specify that deaf persons requesting interpreters should not be charged for the cost of the interpreter?	-	-	-
		2d	Specify that the public entity's decision to deny an interpreter based on undue financial and administrative burden must be made after considering all resources available for use in funding the operation of the program and must be accompanied by a written statement of the reasons for reaching the conclusion?	-	-	-
		2e	Specify that, in any instance where the provision of an interpreter would result in an undue financial and administrative burden, the entity will take any other action that would not result in an undue financial and administrative burden but would nevertheless ensure that the individual with a disability receives the benefits or services provided?	-	-	-
		3	Does your state or local government have employees on staff who are qualified interpreters or have arrangements with one or more vendors to provide interpreting services when needed?	-	-	-
		4	Have the employees who interact with the public been trained on the correct procedures to follow when a person requests an interpreter?	-	-	-
		5a	For events such as meetings, interviews, hearings, medical appointments, court proceedings, and training and counseling sessions?	-	-	-
		5b	Without the state or local government asking the individual who requested the interpreter charged to pay for the services?	-	-	-
		6	Does your state or local government have policies and procedures in place to deal with requests from the general public for documents in Braille, large print, audio recording, and accessible electronic format (that is, an email or compact disc containing the document in plain text, word processing format, HTML or some other format that can be accessed with screen reader software)?	-	-	-

FNO FORM NAME		QNC QUESTIONS		YES	NO	N/A
		7	Does your state or local government have policies and procedures in place to deal with requests from the general public for note takers, computer-assisted real-time transcription services, and other auxiliary aids and services for providing effective communication?	-	-	-
		8	Does your state or local government have the equipment or arrangements with vendors so it can provide written materials in alternative formats (e.g., Braille, large print, audio format, electronic format)?	-	-	-
		9	Does your state or local government provide written materials in alternative formats when asked to do so? (For example, does your entity communicate with blind people by using Braille, large print, or email when asked to do so?)	-	-	-
		10	Does your state or local government give primary consideration to the requests of the person with a disability when determining what type of auxiliary aid or service to provide?	-	-	-
		11	Does your entity ensure that all videos and television programs it produces and all videos it makes available to the public on its internet website are available with captioning and audio description?	-	-	-
		12	Where telephones are available to the public for making outgoing calls, are TTYs available for people with hearing and speech disabilities?	-	-	-
		13	Does your state or local government handle calls placed using a Telecommunications Relay Service or a Video Relay Service in the same way as other telephone calls?	-	-	-

FNO	FORM NAME	QNC QUESTIONS		YES	NO	N/A
4	**DOJ 911 and Emergency Communication Services**	1	Do you have a TTY or TTY-compatible equipment at every emergency communications services call-taking position?	-	-	-
		2	Do you have procedures for maintaining TTYs and TTY-compatible equipment that are as effective as the maintenance procedures for voice telephone equipment?	-	-	-
		3	If you have a plan for back-up equipment in case of equipment malfunctions, telephone line malfunctions, or power failure, does that plan cover TTY calls and equipment?	-	-	-
		4	Is the response time of the telephone emergency services provided for TTY users equal to the response time of the services provided to others?	-	-	-
		5	Is the response quality of the telephone emergency services provided for TTY users equal to the response quality of the services provided to others?	-	-	-
		6	Are the hours of operation of the telephone emergency services provided for TTY users equal to the hours of operation of the services provided to others?	-	-	-
		7	If the telephone emergency services provide additional features (such as automatic number identification, automatic location identification, automatic call distribution), are the features provided to TTY users equal to the features provided to others, whenever feasible? (Feasibility should be determined based on the availability of technology in the marketplace to perform the function for communications received from TTY users.)	-	-	-
		8	Do call takers respond to each silent, open line call by querying the line with a TTY?	-	-	-
		9	Can all call takers easily switch back and forth between TTY mode and voice mode during a call?	-	-	-
		10	Is TTY training mandatory for all emergency communications services personnel who may have contact with individuals from the public who have hearing or speech disabilities?	-	-	-
		11	Do telephone emergency services require or offer refresher training for TTYs at least as often as they require or offer training for voice calls, and at least every six months?	-	-	-
		12	Do you test your telephone emergency services to ensure direct, equal access for people using TTYs?	-	-	-

FNO	FORM NAME	QNC QUESTIONS		YES	NO	N/A
5	**DOJ Website Accessibility**	1	Does the top of each page with navigation links have a "skip navigation" link? (This feature directs screen readers to bypass the row of navigation links and start at the webpage content, thus enabling people who use screen readers to avoid having to listen to all the links each time they move to a new page.)	-	-	-
		2	Do all links have a text description that can be read by a screen reader (not just a graphic or "click here")?	-	-	-
		3	Do all of the photographs, maps, graphics and other images on the website currently have HTML tags (such as an "alt" tag or a long description tag) with text equivalents of the material being visually conveyed?	-	-	-
		4	Are all of the documents posted on your website available in HTML or another text-based format (for example, rich text format (RTF) or word processing format), even if you are also providing them in another format, such as Portable Document Format (PDF)?	-	-	-
		5	If your website has online forms, do HTML tags describe all of the controls (including all text fields, check boxes, drop-down lists, and buttons) that people can use in order to complete and submit the forms?	-	-	-
		6	If your website has online forms, does the default setting in drop-down lists describe the information being requested instead of displaying a response option (e.g., "your age" instead of "18 - 21")?	-	-	-
		7	If a webpage has data charts or tables, is HTML used to associate all data cells with column and row identifiers?	-	-	-
		8	Do all video files on your website have audio descriptions of what is being displayed to provide access to visually conveyed information for people who are blind or have low vision?	-	-	-
		9	Do all video files on your website have written captions of spoken communication synchronized with the action to provide access to people who are deaf or hard of hearing?	-	-	-
		10	Do all audio files on your website have written captions of spoken communication synchronized with the action to provide access to people who are deaf or hard of hearing?	-	-	-
		11	Have all webpages been designed so they can be viewed using visitors, web browser and operating system settings for color and font?	-	-	-
		12	Do you have a written policy on website accessibility?	-	-	-
		13	Is the website accessibility policy posted on your website in a place where it can be easily located?	-	-	-
		14	Have procedures been developed to ensure that content is not added to your website until it has been made accessible?	-	-	-
		15	Does the website manager check the HTML of all new webpages to confirm accessibility before the pages are posted?	-	-	-

FNO FORM NAME		QNC QUESTIONS		YES	NO	N/A
		16	When documents are added to your website in PDF format, are text-based versions of the documents (e.g., HTML, RTF, or word processing format) added at the same time as the PDF versions?	-	-	-
		17	Have in-house staff and contractors received information about the website accessibility policy and procedures to ensure website accessibility?	-	-	-
		18	Have in-house and contractor staff received appropriate training on how to ensure the accessibility of your website?	-	-	-
		19	Have in-house and contractor staff who create web content or post it on your website received copies of the Department of Justice's technical assistance document "Accessibility of State and Local Government Websites to People with Disabilities"?	-	-	-
		20	If your website contains inaccessible content, is a specific written plan including timeframes in place now to make all of your existing web content accessible?	-	-	-
		21	Have you posted on your website a plan to improve website accessibility and invited suggestions for improvements?	-	-	-
		22	Does your website home page include easily locatable information, including a telephone number and email address, for use in reporting website accessibility problems and requesting accessible services and information?	-	-	-
		23	Do you have procedures in place to assure a quick response to website visitors with disabilities who are having difficulty accessing information or services available via the website?	-	-	-
		24	Have you asked disability groups representing people with a wide variety of disabilities to provide feedback on the accessibility of your website? (Note: Feedback from people who use a variety of assistive technologies is helpful in ensuring website accessibility.)	-	-	-
		25	Have you tested your website using one of the products available on the Internet to test website accessibility? (Note: Products available for testing website accessibility include no-cost and low-cost options. These products may not identify all accessibility issues and may flag issues that are not accessibility problems. However, they are, nonetheless, a helpful tool in improving website accessibility.)	-	-	-
		26	Are alternative ways of accessing web-based information, programs, activities, and services available for people with disabilities who cannot use computers?	-	-	-

FNO	FORM NAME	QNC	QUESTIONS	YES	NO	N/A
7	**DOJ Emergency Management**	1	If you have a contract or other arrangement with any third party entities, such as the American Red Cross or another local government, to provide emergency planning and/or emergency management or response services, does your contract or other documentation of your arrangement contain policies and procedures to ensure that the third party entities comply with ADA requirements, as outlined in Chapter 7 of this Tool Kit, including Addenda 2 and 3?	-	-	-
		2	Do you have written procedures to ensure that you regularly seek and use input from persons with a variety of disabilities and organizations with expertise in disability issues in all phases of your emergency planning, such as those addressing preparation, notification, evacuation, transportation, sheltering, medical and social services, temporary lodging and/or housing, clean-up, and remediation?	-	-	-
		3	Do you seek input and participation from people with disabilities and organizations with expertise on disability issues when you stage emergency simulations and otherwise test your preparedness?	-	-	-
		4	For planning purposes, have you determined the extent to which, in an emergency or disaster, people with disabilities who reside or visit your community are likely to need individualized notification, evacuation assistance, and/or transportation, including accessible transportation?	-	-	-
		5	Has your emergency planning identified the resources you will use to meet the needs of individuals with disabilities who require individualized notification, evacuation assistance, and/or transportation, including accessible transportation?	-	-	-
		6	If your emergency warning systems use sirens or other audible alerts, do you have written procedures to ensure the use of a combination of methods to provide prompt notification of emergencies to persons who are deaf or hard of hearing? (Note: Examples of methods that may be effective in communicating emergencies to people who are deaf or hard of hearing include auto-dialed TTY and taped telephone messages, text messaging, emails, open captioning on emergency broadcasts on local television stations, and dispatching qualified sign language interpreters to assist with emergency announcements that are televised.)	-	-	-
		7	Does your plan address the needs of people with disabilities who will require assistance leaving their homes?	-	-	-
		8	Do you have written procedures to ensure that your community evacuation plans enable people with a wide variety of disabilities to safely self-evacuate and, for those who cannot self-evacuate, to receive evacuation assistance? (Note: The plans should address the evacuation needs of people who have mobility disabilities, people who are blind or have low vision, people who are deaf or hard of hearing, people with cognitive and psychiatric disabilities, people with disabilities who use service animals, and other people with disabilities who reside or visit your community who may need evacuation assistance.)	-	-	-

FNO FORM NAME		QNC QUESTIONS		YES	NO	N/A
		9	Have you established a voluntary, confidential registry for persons with disabilities to request individualized notification, evacuation assistance, and transportation?	-	-	-
		9a	If you maintain such a registry, do you have written procedures to ensure that it is voluntary, it has appropriate confidentiality controls, the information in the registry is regularly updated, and outreach to persons with disabilities and organizations with expertise on disability issues is conducted to inform them of its availability?	-	-	-
		10	Does your emergency transportation plan identify accessible transportation resources that will be available to evacuate persons with mobility disabilities, including people who use wheelchairs or scooters, people who use medical equipment, such as oxygen tanks, and people who use service animals? (Accessible transportation consists of wheelchair lift-equipped vehicles.)	-	-	-
		11	Do your emergency plans, policies, and procedures provide for people with disabilities to be evacuated and transported to shelters together with their families?	-	-	-
		12	Do your emergency management plans, policies, and procedures ensure that people with disabilities are not separated from their service animals during evacuation and transportation?	-	-	-
		13a	Emergency planners, those who designate facilities to be used as shelters, and those who make advance arrangements to address emergency staffing, equipment, medical supplies, food and beverages, and other emergency-related needs?	-	-	-
		13b	Staff and volunteers who participate in notification activities?	-	-	-
		13c	First responders and other staff and volunteers who deal with evacuation, transportation, and emergency-related security issues?	-	-	-
		13d	Shelter staff and volunteers and those who will be involved in routing people to shelters and deciding shelter placements for people with disabilities and their families?	-	-	-
		13e	Individuals involved in establishing and operating temporary housing or lodging programs?	-	-	-
		13f	Individuals who will establish and operate emergency-related medical and social service programs?	-	-	-
		13g	Individuals who will be responsible for repair, rebuilding, and continuity of program operations following an emergency or disaster?	-	-	-
		14	Have you conducted an accessibility survey of all of your emergency shelter facilities, whether owned by government or a private entity to determine if they comply with ADA requirements? (See "Checklist for Accessible Emergency Shelters," included in Addendum 3 to this Chapter.)	-	-	-
		15	Have you identified access barriers at any of the shelter facilities?	-	-	-

FNO FORM NAME		QNC QUESTIONS		YES	NO	N/A
		16	If you found barriers at emergency shelters, have you taken steps to ensure that the barriers are removed to provide (at a minimum) the following accessible features that comply with the requirements of the ADA Standards for Accessible Design (ADA Standards): parking, exterior route from the parking to the entrance, entrance, sleeping area, dining area, toilet facilities, bathing facilities, recreational areas, emergency exit, and interior routes to all of these areas?	-	-	-
		17	If all barriers have not been removed from a shelter, have you identified an appropriate number of alternate shelters that provide (at a minimum) the following accessible features that comply with the requirements of the ADA Standards: parking, exterior route from the parking to the entrance, entrance, sleeping area, dining area, toilet facilities, bathing facilities, recreational areas, emergency exit, and interior routes to all of these areas?	-	-	-
		18	Until all emergency shelters have the required accessible features referenced above, have you identified and widely publicized to the public and to persons with disabilities and disability organizations the most accessible emergency shelters and the accessible features that each has?	-	-	-
		19	Have you adopted policies and procedures to ensure that shelter staff and volunteers maintain accessible routes for individuals who use wheelchairs and other mobility aids?	-	-	-
		20	Have you adopted procedures to minimize protruding objects and overhead objects in shelters so that someone who is blind or has low vision can walk safely throughout the shelter?	-	-	-
		21	Have you adopted policies and procedures for shelter staff and volunteers to offer wayfinding assistance to people who are blind and those with low vision who may need assistance in understanding and navigating the shelter layout and locating shelter facilities (e.g., finding the route to the toilet room when furniture layouts change)?	-	-	-
		22	Have you established policies and procedures to ensure that, in the future, facilities are surveyed for accessibility and barriers to access are removed before a facility is designated as a shelter?	-	-	-
		23	Do you have supplies of informational materials routinely handed out at emergency shelters available in alternative formats (Braille, large print) for people who are blind or have low vision?	-	-	-
		24	Have you adopted policies and procedures for shelter staff and volunteers to provide assistance to people who are blind or have low vision by reading and completing forms and other written materials that are not available in alternative formats?	-	-	-
		25	Do any of your shelters have low-stimulation "stress-relief zones," such as an empty classroom in a school building used as an emergency shelter?	-	-	-

FNO FORM NAME		QNC QUESTIONS		YES	NO	N/A
		25a	If you offer "stress-relief zones," have you adopted policies and procedures to make these areas available on a priority basis to people whose disabilities are aggravated by stress?	-	-	-
		26	Have you adopted emergency shelter eligibility policies and procedures to ensure that people with disabilities are housed at "mass care" shelters unless they are medically fragile?	-	-	-
		27	Have you adopted "mass care" shelter procedures to ensure that shelter staff and volunteers do not turn away people with disabilities who may need assistance with activities of daily living even though their personal care aides may not be with them?	-	-	-
		28	Have you adopted policies and procedures to ensure that "mass care," "special needs," and "medical" shelter staff and volunteers are trained and monitored so they provide safe, appropriate assistance with activities of daily living (e.g., eating, dressing, personal hygiene, transferring to and from wheelchairs) that some people with disabilities may require?	-	-	-
		29	If you provide a "special needs" or "medical" shelter, have you adopted eligibility policies and procedures to ensure that people with disabilities are not housed in such shelters just because they have a disability? (Note: Special needs and medical shelters are for medically fragile people who require the type of care provided in hospitals and nursing homes. Most people with disabilities are not medically fragile. The ADA requires emergency managers and shelter operators to accommodate people with disabilities in the most integrated setting appropriate to their needs.)	-	-	-
		30	Have your shelter staff and volunteers received training with site-specific instructions for providing people with disabilities access to all services, activities, and programs at "mass care," "medical," and "special needs" shelters?	-	-	-
		31	Do you have written policies and procedures to ensure that people who are deaf or hard of hearing, people with speech disabilities, and people who are blind or have low vision are provided with effective communication during their stay at a shelter?	-	-	-
		32	Do you provide a TTY at each emergency shelter for use by people who are deaf, are hard of hearing, or have speech disabilities?	-	-	-
		33	Do you have written procedures to ensure that persons with disabilities who use service animals are not separated from their service animals when using emergency shelters and have full access to shelter programs, services, and activities, even if pets are normally prohibited in shelters or in certain areas of shelters?	-	-	-
		34	Do you have written procedures to ensure that food, water, and a receptacle and plastic bags for the disposal of service animal waste are available at emergency shelters?	-	-	-
		35	Have you established security procedures at shelters that allow people with service animals to take their animals outside for relief without unnecessary delays for security screening upon re-entry?	-	-	-

FNO FORM NAME		QNC QUESTIONS		YES	NO	N/A
		36	Do you have written procedures to ensure that emergency shelters have back-up generators and a way to keep medications refrigerated (such as a refrigerator or a cooler with ice)?	-	-	-
		37	Do your written procedures on back-up generators include a plan for routinely notifying the public and disability groups of the location of shelters providing electricity and refrigeration?	-	-	-
		38	Does your emergency management plan provide an effective way for people with disabilities to request and receive durable medical equipment and medication while in shelters?	-	-	-
		39	Have you established procedures for people with disabilities to request and receive cots or beds, modifications to cots or beds, securement of cots or beds to allow safe transfer to a wheelchair, and placement of cots or beds in specific locations when needed?	-	-	-
		40	Have you adopted kitchen access policies to provide immediate access to food and refrigerated medications for shelter residents and volunteers whose disabilities may require it?	-	-	-
		41	Does your emergency management plan ensure that at least some kinds of foods and beverages are available in emergency shelters for people with dietary restrictions, such as people who have diabetes or severe food allergies?	-	-	-
		42	Have you established policies and procedures to ensure that medical and social services and other benefit programs are accessible to people with disabilities, including people who use wheelchairs, scooters, and other mobility aids, individuals who cannot leave shelters because of their disabilities, and people who use service animals?	-	-	-
		43	Have you established policies and procedures to ensure that application processes for benefit programs are designed so they do not exclude people with disabilities whose disabilities prevent them from using one particular type of application process (e.g., web-based application processes, telephone-based application processes, procedures requiring applicants to have a valid driver's license, or procedures requiring applicants to apply in person)?	-	-	-
		44	Do you have policies and procedures to ensure that your medical, social service, and other benefit programs provide effective communication to people with disabilities, including people who are deaf or hard of hearing and people who are blind or have low vision?	-	-	-
		44a	Do your policies and procedures include primary consideration of the communication method preferred by an individual with a disability?	-	-	-
		45	Have you adopted procedures to provide additional time, transportation, and search assistance for people with disabilities in emergency shelters to locate accessible temporary housing and support services in the community following an emergency?	-	-	-

FNO FORM NAME		QNC QUESTIONS		YES	NO	N/A
		46	If you have a program to provide temporary housing to persons when they leave emergency shelters but cannot yet return home (e.g., housing in dormitories, rooms at lodging facilities, trailers), have you adopted a plan for providing prompt, equivalent temporary housing to persons with disabilities, including accessible housing for people who use wheelchairs, scooters, and other mobility aids and people who are deaf or hard of hearing?	-	-	-
		47	If you have a temporary housing program, do your information materials on temporary housing include information on accessible housing? (Such as the specific location of accessible hotel rooms within the community or in nearby communities and transportation resources available in that area.)	-	-	-
		48	Have you established policies and procedures to ensure that the repair and rebuilding of government facilities comply with the accessibility requirements of Title II of the ADA?	-	-	-
		49	Have you established policies to ensure that programs relocated from a damaged facility on a temporary or permanent basis remain accessible to people with disabilities?	-	-	-

FNO	FORM NAME	QNC	QUESTIONS	YES	NO	N/A
8	**City ADA Supplemental Questionnaire**	1	Does your department have a written policy stating that it does not discriminate against people with disabilities?	-	-	-
		2	Does your staff know and understand about your commitment not to discriminate against people with disabilities?	-	-	-
		3	Does your department provide training on ADA to staff, (including access issues, sensitivity and awareness) on different disability groups?	-	-	-
		4	Do your department have a designated person for the Americans With Disabilities Act (ADA) compliance requirements?	-	-	-
		5	Do you describe your programs and services, including their purpose, scope, activities, and participants to residents?	-	-	-
		6	Do you review the resource manuals that govern your programs, including laws, statutes, rules, policies, ordinances, and other guidelines to staff?	-	-	-
		7	Do you describe any services provided by your agency to particular disability groups?	-	-	-
		8	Do you describe a separate or special program for individuals with disabilities?	-	-	-
		9	If yes to #8, do you have written procedures to ensure that these individuals may also participate in programs available to the public?	-	-	-
		10a	Deny a qualified individual with a disability the opportunity to participate in or benefit from the aid, benefit, or service?	-	-	-
		10b	Afford an opportunity for participation or benefit that is not equal to that afforded others?	-	-	-
		10c	Provide a qualified individual with a disability with an aid, benefit, or service that is not as effective in affording equal opportunity to obtain the same result, gain the same benefit, or reach the same level of achievement as that provided to others?	-	-	-
		10d	Provide different or separate aids, benefits, or services to individuals with disabilities unless necessary to make them as effective as those provided to others?	-	-	-
		10e	Provide assistance or contract with a person or entity that discriminates based on disability?	-	-	-
		10f	Deny a qualified individual with a disability the opportunity to participate as a member of planning or advisory boards?	-	-	-
		10g	Limit the enjoyment of a qualified individual with a disability any right, privilege, advantage or opportunity enjoyed by other qualified individuals who receive your services?	-	-	-
		11	Does your department prepare audiovisual or televised presentations for the public or make audiovisual presentations to the public?	-	-	-
		12	Does your department organize special events or do you help facilitate public events on city property?	-	-	-
		13	Does your department have meetings with staff and private groups to ensure their obligations to facilitate participation of individuals with disabilities for equal access, etc?	-	-	-
		14	Does your department consult or work with any outside organizations that assist people with disabilities?	-	-	-
		15	Do you feel that your department is in compliance with the assisting persons with disability if needed?	-	-	-

FNO	FORM NAME	QNC	QUESTIONS	YES	NO	N/A
9	**City Human Resources - Employment Services**	1a	Recruiting advertisements?	-	-	-
		1b	Processing of applications?	-	-	-
		1c	Employment testing?	-	-	-
		1d	Interviewing and orientation?	-	-	-
		1e	Promotion, transfer, demolition, lay off, or reinstatement, including changes in compensation resulting from these actions?	-	-	-
		1f	Job assignments?	-	-	-
		1g	Job classifications, use of unpaid leave of vacation and sick leave, absence, or compensatory time?	-	-	-
		1h	Opportunities for and financial support of training opportunities, conferences, health and insurance benefits, agency sponsored activities, including recreational or social programs?	-	-	-
		2	Do you describe how you ensure that any employment related criteria (including minimum qualifications and testing requirements) which would adversely affect the opportunities of individuals with disabilities are related to the job and are a business necessity?	-	-	-
		3	Do you describe how your city responds to a request for an accommodation in testing and interviews?	-	-	-
		4	Do you describe the steps taken to ensure that nondiscriminatory questions are asked in a hiring interview?	-	-	-
		5	Do you describe the steps that are taken to determine if an individual with a disability is capable of performing the essential functions of a particular job, with or without a reasonable accommodation?	-	-	-
		6	Do you describe the process the town or city uses to determine whether a request for a reasonable accommodation on the job can be granted or would cause undue hardship?	-	-	-
		7	Do you describe your town or city's policy and procedures for maintaining the confidentiality of employee medical information, voluntary self-identification of disability, and requests for accommodation?	-	-	-
		8	Do you describe the training or other measures taken to ensure that employees and supervisors do not subject individuals with disabilities to discrimination because of insensitivity or lack of knowledge?	-	-	-
		9	Do you describe the steps taken by the city to ensure that communications with applicants and members of the public with disabilities are as effective as communications with others?	-	-	-
		10a	Audio tape?	-	-	-
		10b	Braille?	-	-	-
		10c	Reader?	-	-	-
		10d	Aide?	-	-	-
		10e	Mailed to home?	-	-	-
		10f	Large print?	-	-	-
		10g	Interpreter?	-	-	-
		10h	Other assistance?	-	-	-

FNO FORM NAME		QNC QUESTIONS		YES	NO	N/A
		11	Do you describe the auxiliary aids and services that will be provided to individuals with a disability?	-	-	-
		12	Do you describe how an individual with a disability may request assistance and express their preference for auxiliary aids and services?	-	-	-
		13	Do you describe how the city regularly advertises to the public that you will provide auxiliary aids and services for effective communication to participate in your programs and services?	-	-	-
		14	Do you describe how the city will ensure that meetings, hearings, and conferences will be accessible for individuals with communication disabilities?	-	-	-
		15	Do you describe how the city will provide auxiliary aids or services on request?	-	-	-
		16	Do you describe how the city will use TDD (telecommunication device for the disabled) or the state relay system to communicate with those who have impaired hearing or speech, including training of staff?	-	-	-
		17	Do you have a 911 emergency service?	-	-	-
		18	If yes to #9, is there a TDD connected to this service?	-	-	-
		19	If you use relay services, do you list the name of the company and type of services provided?	-	-	-
		20	Are your TDD or relay service phone numbers printed on agency brochures, notices, and letterhead listed in telephone directories?	-	-	-
		21	Does your city have an 800 number?	-	-	-
		22	If yes to # 13, do you describe how the city has made the 800 number usable by persons with hearing impairments?	-	-	-
		23	Do you let the public use your telephone?	-	-	-
		24	If yes to question 15, is there at least one designated phone that is hearing aid compatible?	-	-	-
		25a	A statement included in your self-evaluation from the head of your agency or designee.	-	-	-
		25b	Reasons why the service, program or activity would be fundamentally altered or would result in undue financial and administrative burdens.	-	-	-
		25c	A description of what other provide the action will be taken to benefits or services to the maximum extent possible.	-	-	-
		26	Have individuals with disabilities used your services in the past?	-	-	-
		27	Have there been obvious difficulties or complaints about your services from individuals with disabilities?	-	-	-
		28	If yes to #2, do you document the problems and steps to resolve these concerns?	-	-	-
		29	Do you have written procedures on how to deal with those specific problems or complaints?	-	-	-
		30	Do you have written procedures on what to do if your town or city cannot accommodate a person with a disability?	-	-	-
		31	Does your self-evaluation include a copy of your grievance procedure?	-	-	-

FNO FORM NAME		QNC QUESTIONS		YES	NO	N/A
		32	Does your plan include action steps to notify the public on an ongoing basis about your grievance procedure?	-	-	-
		33	Does your grievance procedure include a statement allowing an individual to submit a grievance in alternative formats?	-	-	-
		34	Does your grievance procedure include a time limit to file a complaint?	-	-	-
		35	Does your grievance procedure inform individuals of their right to file a complaint with a state or federal agency and include the appropriate address(es)?	-	-	-

FNO FORM NAME		QNC QUESTIONS		YES	NO	N/A
10	**Existing Facilities Checklist**	1	Is there a route of travel that does not require the use of stairs?	-	-	-
		2	Is the route of travel stable, firm and slip-resistant?	-	-	-
		3	Is the route at least 36 inches wide?	-	-	-
		4	Can all objects protruding into the circulation paths be detected by a person with a visual disability using a cane?	-	-	-
		5	Do curbs on the route have curb cuts at drives, parking, and drop-offs?	-	-	-
		6	Are the slopes of ramps no greater than 1:12?	-	-	-
		7	Do all ramps longer than 6 feet have railings on both sides?	-	-	-
		8	Are railings sturdy, and between 34 and 38 inches high?	-	-	-
		9	Is the width between railings or curbs at least 36 inches?	-	-	-
		10	Are ramps non-slip?	-	-	-
		11	Is there a 5-foot-long level landing at every 30-foot horizontal length of ramp, at the top and bottom of ramps and at switchbacks?	-	-	-
		12	Does the ramp rise no more than 30 inches between landings?	-	-	-
		13	Are an adequate number of accessible parking spaces available (8 feet wide for car plus 5-foot access aisle)? (For guidance in determining the appropriate number to designate, the table below gives the ADAAG requirements for new construction and alterations (for lots with more than 100 spaces, refer to ADAAG).)	-	-	-
		14	Are 8-foot-wide spaces, with minimum 8-foot wide access aisles, and 98 inches of vertical clearance, available for lift-equipped vans?	-	-	-
		15	Are the access aisles part of the accessible route to the accessible entrance?	-	-	-
		16	Are the accessible spaces closest to the accessible entrance?	-	-	-
		17	Are accessible spaces marked with the International Symbol of Accessibility? Are there signs reading "Van Accessible" at van spaces?	-	-	-
		18	Is there an enforcement procedure to ensure that accessible parking is used only by those who need it?	-	-	-
		19	If there are stairs at the main entrance, is there also a ramp or lift, or is there an alternative accessible entrance?	-	-	-
		20	Do all inaccessible entrances have signs indicating the location of the nearest accessible entrance?	-	-	-
		21	Can the alternate accessible entrance be used independently?	-	-	-
		22	Does the entrance door have at least 32 inches clear opening (for a double door, at least one 32-inch leaf)?	-	-	-
		23	Is there at least 18 inches of clear wall space on the pull side of the door, next to the handle?	-	-	-
		24	Is the threshold edge 1/4-inch high or less, or if beveled edge, no more than 3/4-inch high?	-	-	-
		25	If provided, are carpeting or mats a maximum of 1/2-inch high?	-	-	-
		26	Are edges securely installed to minimize tripping hazards?	-	-	-

FNO FORM NAME		QNC QUESTIONS		YES	NO	N/A
		27	Is the door handle no higher than 48 inches and operable with a closed fist?	-	-	-
		28	Can doors be opened without too much force (exterior doors reserved; maximum is 5 lbf for interior/doors)?	-	-	-
		29	If the door has a closer, does it take at least 3 seconds to close?	-	-	-
		30	Does the accessible entrance provide direct access to the main floor, lobby, or elevator?	-	-	-
		31	Are all public spaces on an accessible route of travel?	-	-	-
		32	Is the accessible route to all public spaces at least 36 inches wide?	-	-	-
		33	Is there a 5-foot circle or a T-shaped space for a person using a wheelchair to reverse direction?	-	-	-
		34	Do doors into public spaces have at least a 32-inch clear opening?	-	-	-
		35	On the pull side of doors, next to the handle, is there at least 18 inches of clear wall space so that a person using a wheelchair or crutches can get near to open the door?	-	-	-
		36	Can doors be opened without too much force (5 lb. maximum for interior doors)?	-	-	-
		37	Are door handles 48 inches high or less and operable with a closed fist?	-	-	-
		38	Are all threshold edges 1/4-inch high or less, or if beveled edge, no more than 3/4-inch high?	-	-	-
		39	Are all aisles and pathways to materials and services at least 36 inches wide?	-	-	-
		40	Is there a 5-foot circle or T-shaped space for turning a wheelchair completely?	-	-	-
		41	Is carpeting low-pile, tightly woven, and securely attached along edges?	-	-	-
		42	In circulation paths through public areas, are all obstacles cane-detectable (located within 27 inches of the floor or higher than 80 inches, or protruding less than 4 inches from the wall)?	-	-	-
		43	If emergency systems are provided, do they have both flashing lights and audible signals?	-	-	-
		44	If provided, do signs and room numbers designating permanent rooms and spaces where goods and services are provided comply with the appropriate requirements for such signage?	-	-	-
		44a	Signs mounted with centerline 60 inches from floor?	-	-	-
		44b	Mounted on wall adjacent to latch side of door, or as close as possible?	-	-	-
		44c	Raised characters, sized between 5/8 and 2 inches high, with high contrast (for room numbers, rest rooms, and exits)?	-	-	-
		44d	Brailled text of the same information?	-	-	-
		44e	If pictogram is used, is it accompanied by raised characters and braille?	-	-	-

FNO FORM NAME		QNC QUESTIONS		YES	NO	N/A
		45	If mounted above 80 inches, do they have letters at least 3 inches high, with high contrast, and non-glare finish?	-	-	-
		46	Do directional and informational signs comply with legibility requirements? (Building directories or temporary signs need not comply.)	-	-	-
		47	Are all controls that are available for use by the public (including electrical, mechanical, cabinet, game, and self-service controls) located at an accessible height?	-	-	-
		48	Are they operable with a closed fist?	-	-	-
		49	Are the aisles between fixed seating (other than assembly area seating) at least 36 inches wide?	-	-	-
		50	Are the spaces for wheelchair seating distributed throughout?	-	-	-
		51	Are the tops of tables or counters between 28 and 34 inches high?	-	-	-
		52	Are knee spaces at accessible tables at least 27 inches high, 30 inches wide, and 19 inches deep?	-	-	-
		53	At each type of cashier counter, is there a portion of the main counter that is no more than 36 inches high?	-	-	-
		54	Is there a portion of food-ordering counters that is no more than 36 inches high, or is there space at the side for passing items to customers who have difficulty reaching over a high counter?	-	-	-
		55	Are there ramps, lifts, or elevators to all public levels?	-	-	-
		56	On each level, if there are stairs between the entrance and/or elevator and essential public areas, is there an accessible alternate route?	-	-	-
		57	Do treads have a non-slip surface?	-	-	-
		58	Do stairs have continuous rails on both sides, with extensions beyond the top and bottom stairs?	-	-	-
		59	Are there both visible and verbal or audible door opening/closing and floor indicators (one tone-up, two tones-down)?	-	-	-
		60	Are the call buttons in the hallway no higher than 42 inches?	-	-	-
		61	Do the controls inside the cab have raised and braille lettering?	-	-	-
		62	Is there a sign on both door jambs at every floor identifying the floor in raised and braille letters?	-	-	-
		63	If an emergency intercom is provided, is it usable without voice communication?	-	-	-
		64	Is the emergency intercom identified by braille and raised letters?	-	-	-
		65	Can the lift be used without assistance, if not, is a call button provided?	-	-	-
		66	Is there at least 30 by 48 inches of clear space for a person in a wheelchair to approach to reach the controls and use the lift?	-	-	-
		67	Are controls between 15 and 48 inches high (up to 54 inches if a side approach is possible)?	-	-	-

FNO FORM NAME		QNC QUESTIONS		YES	NO	N/A
		68	If rest rooms are available to the public, is at least one rest room (either one for each sex, or unisex) fully accessible?	-	-	-
		69	Are there signs at inaccessible rest rooms that give directions to accessible ones?	-	-	-
		70	Is there tactile signage identifying rest rooms?	-	-	-
		71	Are pictograms or symbols used to identify rest rooms, and, if used, are raised characters and braille included below them?	-	-	-
		72	Is the doorway at least 32 inches clear?	-	-	-
		73	Are doors equipped with accessible handles (operable with a closed fist), 48 inches high or less?	-	-	-
		74	Can doors be opened easily (5 lb. maximum force)?	-	-	-
		75	Does the entry configuration provide adequate maneuvering space for a person using a wheelchair?	-	-	-
		76	Is there a 36-inch-wide path to all fixtures?	-	-	-
		77	Is the stall door operable with a closed fist, inside and out?	-	-	-
		78	Is there a wheelchair-accessible stall that has an area of at least 5 feet by 5 feet, clear of the door swing, OR is there a stall that is less accessible but that provides greater access than a typical stall (either 36 by 69 inches or 48 by 69 inches)?	-	-	-
		79	In the accessible stall, are there grab bars behind and on the side wall nearest to the toilet?	-	-	-
		80	Is the toilet seat 17 to 19 inches high?	-	-	-
		81	Does one lavatory have a 30-inch-wide by 48-inch-deep clear space in front?	-	-	-
		82	Is the lavatory rim no higher than 34 inches?	-	-	-
		83	Is there at least 29 inches from the floor to the bottom of the lavatory apron (excluding pipes)?	-	-	-
		84	Can the faucet be operated with one closed fist?	-	-	-
		85	Are soap and other dispensers and hand dryers within reach ranges (see page 7) and usable with one closed fist?	-	-	-
		86	Is the mirror mounted with the bottom edge of the reflecting surface 40 inches high or lower?	-	-	-
		87	Is there at least one fountain with clear floor space of at least 30 by 48 inches in front?	-	-	-
		88	Is there one fountain with its spout no higher than 36 inches from the ground, and another with a standard height spout (or a single "hi-low" fountain)?	-	-	-
		89	Are controls mounted on the front or on the side near the front edge, and operable with one closed fist?	-	-	-
		90	Is each water fountain cane-detectable (located within 27 inches of the floor or protruding into the circulation space less than 4 inches from the wall?	-	-	-
		91	If pay or public use phones are provided, is there clear floor space of at least 30 by 48 inches in front of at least one?	-	-	-

FNO FORM NAME		QNC QUESTIONS		YES	NO	N/A
		92	Is the highest operable part of the phone no higher than 48 inches (up to 54 inches if a side approach is possible)?	-	-	-
		93	Does the phone protrude no more than 4 inches into the circulation space?	-	-	-
		94	Does the phone have push-button controls?	-	-	-
		95	Is the phone hearing-aid compatible?	-	-	-
		96	Is the phone adapted with volume control?	-	-	-
		97	Is the phone with volume control identified with appropriate signage?	-	-	-
		98	If there are four or more public phones in the building, is one of the phones equipped with a text telephone (TT or TDD)?	-	-	-
		99	Is the location of the text telephone identified by accessible signage bearing the International TDD Symbol?	-	-	-

FNO	FORM NAME	QNC QUESTIONS		YES	NO	N/A
11	**Swimming Pools**	1	Is there an accessible route to the entrance of the facility containing a swimming pool, wading pool and spa? (Use the checklist for Priority 1: Approach & Entrance.)	-	-	-
		2	Is there an accessible route from the facility entrance to the swimming pool, wading pool and/or spa? (Use the checklist for Priority 2: Access to Goods & Services.)	-	-	-
		3a	Does it have a sloped entry or lift?	-	-	-
		3b	Is there a second means of entry that is a transfer wall, transfer system, sloped entry, lift or stairs?	-	-	-
		4	If there is a swimming pool with less than 300 linear feet of pool wall, does it have a sloped entry or lift?	-	-	-
		5	If there is a wave action pool, leisure river, sand bottom pool, or other pool where user access is limited to one area, does it have a pool lift, sloped entry or transfer system?	-	-	-
		6	If there is a wading pool, does it have a sloped entry?	-	-	-
		7	If there is a spa, does it have a pool lift, transfer wall or transfer system?	-	-	-
		8	If there is a catch pool does it have an accessible route to the edge of the pool?Note: A catch pool has water slide flumes that drop users into the water. They are not required to provide an accessible means of entry or exit.	-	-	-
		9	If a pool lift is provided, is it located where the water level is no greater than 48 inches? (Note: If the entire pool depth is greater than 48 inches, the pool lift may be located at any water depth.)	-	-	-
		10	Is there a clear deck space on the side of the seat opposite the water that is at least 36 inches wide and at least 48 inches long extending from 12 inches behind the rear of the seat?	-	-	-
		11	Is the slope of the clear deck space no greater than 1:48?	-	-	-
		12	Does the height of the lift seat allow a stop at no less than 16 inches and no greater than 19 inches measured from the deck to the top of the seat surface when in the raised (load) position?	-	-	-
		13	Is the lift seat at least 16 inches wide?	-	-	-
		14	Does the seat submerge to a water depth of at least 18 inches below the stationary water level?	-	-	-
		15	Is the centerline of the seat located over the deck and at least 16 inches from the edge of the pool?	-	-	-
		16	Does the deck surface between the centerline of the seat and the pool edge have a slope no greater than 1:48?	-	-	-
		17	Is there a footrest that moves with the seat? (Note: Footrests are not required on pool lifts provided in spas.)	-	-	-
		18	If there is an armrest, is it removable or does it fold clear of the seat when the seat is in the raised (load) position?	-	-	-
		19	Can the person using the lift do so without assistance and call the lift when it is in the deck and the water positions? (Note: Footrests are not required on pool lifts provided in spas.)	-	-	-
		20	Are the controls and operating mechanisms unobstructed when the lift is in use?	-	-	-

FNO FORM NAME		QNC QUESTIONS		YES	NO	N/A
		21	Are the controls and operating mechanisms operable with one hand and without tight grasping, pinching or twisting of the wrist?	-	-	-
		21a	Do they require no more than 5 pounds of pressure to operate?	-	-	-
		22	Does the lift have a weight capacity of at least 300 pounds and capable of sustaining a static load of at least one and a half times the rated load?	-	-	-
		23	If a sloped entry is provided, is the width at least 36 inches?	-	-	-
		24	Is the surface stable and firm? (Note: Sloped entry surfaces are not required to be slip resistant.)	-	-	-
		25	Does the sloped entry extend to a depth at least 24 inches and no greater than 30 inches below the stationary water level?	-	-	-
		25a	OR, If this is a wading pool, does the sloped entry and landings, if provided, extend to the deepest part of the pool?	-	-	-
		26	Does the sloped entry extend to a depth at least 24 inches and no greater than 30 inches below the stationary water level?	-	-	-
		27	OR, does the sloped entry extend to a depth at least 24 inches and no greater than 30 inches below the stationary water level?	-	-	-
		28	If the running slope is steeper than 1:20 and the sloped entry is more than 30 feet long, are there level landings at least 60 inches long and as wide as the sloped entry at intervals no less than 30 feet?	-	-	-
		29	Is the cross slope no greater than 1:48?	-	-	-
		30	Are there handrails on both sides of the sloped entry? (Note: If this is a wading pool, handrails are not required. If handrails are provided the 2010 Standards specifications for handrails do not apply.)	-	-	-
		31	Do the handrails extend at least 12 inches beyond the top of the sloped entry? (Note: Handrail extensions are not required at the bottom landing.)	-	-	-
		32	Is the width between handrails at least 33 inches and no greater than 38 inches? (Note: If this is a wave action pool, leisure river, sand bottom pool, or other pool where user access is limited to one area, the width between handrails is not specified.)	-	-	-
		33	Is the top of the handrail gripping surface no less than 34 inches and no greater than 38 inches above the sloped entry surface? (Note: Handrails are not required below the stationary water level.)	-	-	-
		34a	Circular: is the diameter no less than 1 ¼ inches and no greater than 2 inches?	-	-	-
		34b	OR, Non-Circular: is the perimeter no less than 4 inches and no greater than 6 ¼ inches and the cross section no more than 2¼ inches?	-	-	-
		35	If a transfer wall is provided, is there a clear deck space at the base of the transfer wall that is at least 60 inches wide and at least 60 inches long?	-	-	-
		36	Is the slope of the clear deck space no greater than 1:48?	-	-	-
		37	Is there at least one grab bar?	-	-	-

FNO FORM NAME		QNC QUESTIONS		YES	NO	N/A
		38	Is/are the grab bar(s) perpendicular to the pool wall?	-	-	-
		39	Does/do the grab bar(s) extend the full depth of the transfer wall?	-	-	-
		40	Is the top of the grab bar(s) gripping surface at least 4 inches and no greater than 6 inches above the transfer wall?	-	-	-
		41a	Circular: is the diameter no less than 1 ¼ inches and no greater than 2 inches?	-	-	-
		41b	OR, Non-Circular: is the perimeter no less than 4 inches and no greater than 4.8 inches and the cross section no more than 2 inches?	-	-	-
		42	Is the space between the grab bar(s) and projecting objects above at least 12 inches?	-	-	-
		43	Can the grab bar(s) support at least 250 pounds at any point on the grab bar(s), fastener, mounting device, or supporting structure?	-	-	-
		44a	Circular: is the diameter no less than 1 ¼ inches and no greater than 2 inches?	-	-	-
		44b	OR, Non-Circular: is the perimeter no less than 4 inches and no greater than 4.8 inches and the cross section no more than 2 inches?	-	-	-
		45a	Is the clear deck space centered on the clearance between the grab bars?	-	-	-
		45b	Is there at least 24 inches of clearance between the grab bars?	-	-	-
		46a	No less than 16 inches and no greater than 19 inches in height, measured from the deck?	-	-	-
		46b	No less than 12 inches and no greater than 16 inches in depth?	-	-	-
		46c	No less than 60 inches in length?	-	-	-
		47	Is the length of the transfer wall centered on the clear deck space?	-	-	-
		48	Is the surface of the transfer wall smooth with rounded edges?	-	-	-
		49a	Is there a transfer platform at the head of each system?	-	-	-
		49b	Is the transfer platform at least 19 inches deep and at least 24 inches wide?	-	-	-
		50	Is the transfer platform no less than 16 inches and no greater than 19 inches in height, measured from the deck?	-	-	-
		51	Is there a transfer space at least 60 inches wide and at least 60 inches long at the base of the transfer platform?	-	-	-
		52	Is the slope of the transfer space no greater than 1:48?	-	-	-
		53	Is the slope of the transfer space no greater than 1:48?	-	-	-
		54	Is the side of the transfer platform serving the transfer space unobstructed?	-	-	-
		55	Are transfer steps no greater than 8 inches in height?	-	-	-
		56a	At least 14 inches and no greater than 17 inches deep?	-	-	-
		56b	At least 24 inches wide?	-	-	-
		57	Does the surface of the bottom tread of transfer steps extend to a water depth of at least 18 inches below the stationary water level?	-	-	-

FNO FORM NAME		QNC QUESTIONS		YES	NO	N/A
		58	Is the surface of the transfer system smooth with rounded edges?	-	-	-
		59a	Is there at least one grab bar on each transfer step and the transfer platform?	-	-	-
		59b	OR, is there a continuous grab bar serving each transfer step and the transfer platform?	-	-	-
		60	Is there a grab bar on at least one side of the transfer system?	-	-	-
		61	If there is a grab bar on each step, are the tops of the gripping surfaces at least 4 inches and no greater than 6 inches above each step and transfer platform?	-	-	-
		62	If there is a continuous grab bar, is the top of the gripping surface at least 4 inches and no greater than 6 inches above the step nosing and transfer platform?	-	-	-
		63a	Circular: is it no less than 1 ¼ inches and no greater than 2 inches in diameter? OR	-	-	-
		63b	OR, Non-Circular: is the cross section no greater than 2 inches and the perimeter no less than 4 inches and no greater than 4.8 inches?	-	-	-
		64	Is the space between the grab bar(s) and projecting objects above at least 12 inches?	-	-	-
		65	Can the grab bar(s) support at least 250 pounds at any point on the grab bar(s), fastener, mounting device, or supporting structure?	-	-	-
		66	If accessible pool steps are provided, are there handrails on both sides of the steps?	-	-	-
		67	Is the width between the handrails at least 20 inches and no greater than 24 inches?	-	-	-
		68	Is the top of the handrail gripping surface no less than 34 inches and no greater than 38 inches above the pool entry surface?	-	-	-
		69a	Circular: is the diameter no less than 1 ¼ inches and no greater than 2 inches? OR	-	-	-
		69b	OR, Non-Circular: is the perimeter no less than 4 inches and no greater than 6 ¼ inches and the cross section no more than 2 ¼ inches?	-	-	-
		70	Do the handrails extend at least 12 inches horizontally beginning above the first riser nosing?	-	-	-
		71	Do the extensions return to a wall, guard or the deck surface?	-	-	-
		72	If a handrail is mounted on a wall, is the clear space between the handrail and wall 1½ inches?	-	-	-
		73	Are riser heights of the steps uniform?	-	-	-
		74	Are tread depths uniform?	-	-	-
		75	Are treads at least 11 inches deep?	-	-	-
		76	Is the radius of curvature at the leading edge of the step treads no greater than ½ inch?	-	-	-
		77a	Is the underside of the leading edge curved or beveled?	-	-	-
		77b	Do nosings extend no greater than 1½ inches over the tread below?	-	-	-
		78	If the riser slopes under the tread is the slope angle no greater than 30 degrees from vertical?	-	-	-
		79	Are risers solid?	-	-	-

FNO FORM NAME		QNC QUESTIONS		YES	NO	N/A
12	**Play Areas**	1	Is there an accessible route to the entrance of the play area?	-	-	-
		1a	If there are separate play areas within a site for specific age groups, is there an accessible route to each play area?	-	-	-
		1b	Is there an accessible route within the play area connecting ground level play components that are on an accessible route and elevated play components that are on an accessible route including the entry and exit points of those components?	-	-	-
		2	Is there an accessible route to at least one of each type of ground level play component?	-	-	-
		3	If there are elevated play components, is there an accessible route to at least the following number and type of ground level play components?	-	-	-
		4	If two or more ground level play components are on an accessible route are they dispersed throughout the play area and integrated with other play components?	-	-	-
		5	If there is a soft contained play structure with three or fewer entry point, is there an accessible route to at least one entry point?	-	-	-
		5a	It there are four or more entry points, are there accessible routes to at least two entry points?	-	-	-
		6	Accessible Route Connecting Ground Level Play Components? (Use the checklist for Priority 1: Approach & Entrance with the following exceptions and requirements.)	-	-	-
		7	Is the vertical clearance of the accessible route at least 80 inches above the ground surface?	-	-	-
		8	If the play area is less than 1,000 square feet: Is the route at least 44 inches wide?	-	-	-
		8a	If the route exceeds 30 feet in length is a wheelchair turning space provided, i.e. a circle at least 60 inches in diameter or a T-shaped space within a 60-inch square?	-	-	-
		9	If the play area is 1,000 square feet or greater is the route at least: 60 inches wide?	-	-	-
		9a	Is the area 36 inches wide for a distance no greater than 60 inches if reduced segments are separated by segments at least 60 wide and at least 60 inches long?	-	-	-
		10	Is the route no steeper than 1:16, i.e. for every inch of height change there are at least 16 inches of run?	-	-	-
		11	If the route is steeper than 1:20 and the rise for a ramp run is higher than 6 inches are there handrails on both sides of the ramp run?	-	-	-
		12	Is the top of the handrail gripping surface no less than 20 inches and no greater than 28 inches above the ramp surface?	-	-	-
		13	Is the handrail gripping surface: circular, with an outside diameter of at least .95 inch and no more than 1.55 inches; or non-circular, providing an equivalent gripping surface?	-	-	-
		14	Elevated Play Components: Is there an accessible route to entry and exit points of at least 50 percent of elevated components?	-	-	-

FNO FORM NAME		QNC QUESTIONS		YES	NO	N/A
		15	If there are 20 or more elevated play components are at least 25% connected by ramps?	-	-	-
		15a	Are the other 25% that are required to be on an accessible route connected by either ramps or transfer systems?	-	-	-
		16	If there are fewer than 20 elevated play components are at least 50% connected by either ramps or transfer systems.	-	-	-
		17a	At least 36 inches wide?	-	-	-
		17b	OR, at least 32 inches wide for a distance no greater than 24 inches if the reduced width segments are separated by segments at least 48 inches long and at least 36 inches wide?	-	-	-
		17c	OR, if part of a transfer system, at least 24 inches wide?	-	-	-
		18	If there is a ramp are there handrails on both sides?	-	-	-
		19	Is the top of the handrail gripping surface no less than 20 inches and no greater than 28 inches above the ramp surface?	-	-	-
		20a	Circular, is the outside diameter no less than .94 inch and no greater than 1.55 inch?	-	-	-
		20b	Non-circular, is it equivalent to a circular gripping surface with a diameter no less than .94 inch and no greater than 1.55 inch?	-	-	-
		21	Is the rise for any ramp run connecting elevated play components no greater than 12 inches?	-	-	-
		22	If a transfer system is provided is the transfer system at least 24 inches wide?	-	-	-
		23	Is the top of the transfer platform no less than 11 inches and no greater than 18 inches from the ground?	-	-	-
		24	Is the transfer platform at least 14 inches deep by at least 24 inches wide?	-	-	-
		25	Is there a clear transfer space at least 30 inches wide by at least 48 inches long adjacent to the platform, with the longer dimension centered on and parallel to the 24 inch minimum long side of the platform?	-	-	-
		26	Is the side of the transfer platform adjacent to the clear space unobstructed?	-	-	-
		27	If movement is intended from transfer platforms to levels with elevated play components that are required to be on an accessible route, are transfer steps provided?	-	-	-
		28a	At least 14 inches deep?	-	-	-
		28b	At least 24 inches wide?	-	-	-
		28c	No higher than 8 inches?	-	-	-
		29a	On and off the platform?	-	-	-
		29b	Up and down the transfer steps?	-	-	-
		30a	Ground level play components on an accessible route?	-	-	-
		30b	Elevated play components connected by ramps?	-	-	-

FNO FORM NAME		QNC QUESTIONS		YES	NO	N/A
		31	If there are swings, is there clear space for a person in a wheelchair to turn around, i.e. a circle at least 60 inches in diameter or a T-shaped space within a 60-inch square, immediately adjacent to at least one swing?	-	-	-
		32a	Each ground level play component required to be on an accessible route?	-	-	-
		32b	Each elevated play component required to be on an accessible route that is connected by ramps?	-	-	-
		33a	Are the tops of rims, curbs, or other obstructions no greater than 31 inches above the ground?	-	-	-
		33b	Is there clear ground space at least 30 inches wide by at least 48 inches long for a forward approach?	-	-	-
		33c	Is there clear knee space underneath: At least 17 inches high?	-	-	-
		33d	Does it extend at least 17 inches deep?	-	-	-
		33e	Is it least 30 inches wide?	-	-	-
		34a	Does it provide knee space as noted above?	-	-	-
		34b	OR Is there clear ground space at least 30 inches wide by at least 48 inches long for a parallel approach?	-	-	-
		35a	Is the entry point or seat no less than 11 inches and no greater than 24 inches from the clear floor/ground space?	-	-	-
		35b	Is there at least one means of transfer support?	-	-	-
		36	Do the ground surfaces inside the play area (on accessible routes, clear ground spaces, and turning spaces) comply with ASTM F 1951-99 Standard Specification for Determination of Accessibility of Surface Systems Under and Around Playground Equipment?	-	-	-
		37	Do the ground surfaces within use zones (the ground level area beneath and immediately adjacent to a play structure or play equipment that is designated for unrestricted circulation around the play equipment and where it is predicted that a user would land when falling from or exiting the play equipment) comply with ASTM F 1292-04 Standard Specification for Impact Attenuation of Surfacing Materials Within the Use Zone of Playground Equipment?	-	-	-

FNO FORM NAME		QNC QUESTIONS		YES	NO	N/A
13	**Boating Facilities**	1	Is there an accessible route to the entrance of the boating facility?	-	-	-
		2	Where boat slips are provided are there an adequate number of accessible slips?	-	-	-
		3	Are the accessible boat slips dispersed among the different types of boat slips?	-	-	-
		4	Is there an accessible route to the accessible boat slips?	-	-	-
		5	If there are transition plates is the slope of transition plates no greater than 1:20?	-	-	-
		5a	If the slope is greater than 1:20 is a there a landing at the end of the transition plate?	-	-	-
		6	At least as long as the slip by at least 60 inches wide?	-	-	-
		6a	OR, at least 36 inches wide for a length no greater than 24 inches, if multiple 36 inch wide segments are separated by segments that are at least 60 inches wide and at least 60 inches long?	-	-	-
		7	For every 120 inches (10 feet) of linear pier edge serving the slips, is there a continuous clear opening at least 60 inches wide?	-	-	-
		7a	If there is edge protection at the clear opening, is it no higher than 4 inches and no wider than 2 inches?	-	-	-
		8a	Are they on an accessible route?	-	-	-
		8b	Is there a clear floor space next to each that is at least 30 inches by at least 48 inches?	-	-	-
		8c	Are operable parts no higher than 48 inches and no lower than 15 inches above the surface?	-	-	-
		9a	Are they on an accessible route?	-	-	-
		9b	Is there a clear floor space next to each that is at least 30 inches by at least 48 inches?	-	-	-
		10	Where boarding piers are provided at boat launch ramps, are at least 5 percent, but no fewer than one, accessible?	-	-	-
		11	Is there an accessible route to and connecting the accessible boarding piers?	-	-	-
		12a	At least 60 inches wide?	-	-	-
		12b	OR, at least 36 inches wide for a length of no greater than 24 inches if there are multiple 36-inch-wide segments that are separated by segments measuring at least 60 inches wide and at least 60 inches long?	-	-	-
		13	For every 120 inches (10 feet) of linear pier edge, is there a continuous clear opening at least 60 inches wide?	-	-	-
		13a	If there is edge protection at the clear opening, is it no higher than 4 inches and no wider than 2 inches?	-	-	-
		14a	Are they on an accessible route?	-	-	-
		14b	Is there a clear floor space next to each that is 30 inches by 48 inches minimum?	-	-	-
		14c	Are operable parts no higher than 48 inches and no lower than 15 inches above the surface?	-	-	-
		15a	Are they on an accessible route?	-	-	-
		15b	Is there a clear floor space next to each that is at least 30 inches by at least 48 inches?	-	-	-

FNO	FORM NAME	QNC QUESTIONS		YES	NO	N/A
15	**Ball Fields**	1	Is there an accessible route to each type of sport activity?	-	-	-
		2	At court sports (tennis, basketball, volleyball, etc.) does at least one accessible route connect both sides of the court?	-	-	-
		3	At areas of sport activity, is there an accessible route to each side of team or player seating?	-	-	-
		4	Is there at least one wheelchair space at team or player seating areas?	-	-	-
		5	If there is a single wheelchair space, is it at least 36 inches wide?	-	-	-
		6	If there are 2 adjacent wheelchair spaces, are they each at least 33 inches wide?	-	-	-
		7	If the wheelchair space can be entered from the front or rear, is it at least 48 inches deep?	-	-	-
		8	If the wheelchair space can only be entered from the side, is it at least 60 inches deep?	-	-	-
		9	Do wheelchair spaces adjoin, but not overlap, accessible routes?	-	-	-
		10	Do wheelchair spaces not overlap circulation paths?	-	-	-
		11	Is there an accessible route to at least one of each type of exercise machine and equipment?	-	-	-
		12	Is there clear floor space at least 30 inches wide by at least 48 inches long positioned for transfer or for use by a person seated in a wheelchair next to at least one of each type of exercise machine and equipment?	-	-	-
		13	Is there an accessible route to at least 5 percent but no less than one of each type of bowling lane?	-	-	-
		14	Is there an accessible route to at least one sauna and steam room?	-	-	-
		14a	If there are separate rooms for men and women, is there an accessible route to at least one for each gender?	-	-	-
		15a	Have clear floor space at least 30 wide inches by at least 48 inches long at the end of the bench and parallel to the short axis of the bench?	-	-	-
		15b	Is the clear space free from the swing of the room door?	-	-	-
		15c	At least 42 inches long?	-	-	-
		15d	No less than 20 inches and no greater than 24 inches deep?	-	-	-
		15e	Is the top of the bench seat no less than 17 inches and no greater than 19 inches above the floor or ground?	-	-	-
		15f	Does the bench have back support or is it affixed to a wall?	-	-	-
		15g	Does the back extend from a point no more than 2 inches and a point no less than 18 inches above the seat surface?	-	-	-
		16	Is there a clear floor space for a person in wheelchair to turn around in the room, i.e. a circle at least 60 inches in diameter or a T-shaped space within a 60-inch square?	-	-	-
		17	Is there an accessible route to the shooting facility?	-	-	-
		18	Is there a clear floor space for a person in wheelchair to turn around, i.e. a circle at least 60 inches in diameter, for at least 1 of each type of firing position?	-	-	-

ADA Self-Evaluation Questionnaire

Number of Answered Questions

ADMINISTRATION	DEPARTMENT	FNO	FORM NAME	# QUES.	# ANS.
Police Administration	Police Administration	3	DOJ General Effective Communication	-	-
Police Administration	Police Administration	3	DOJ General Effective Communication	-	-
Police Administration	Police Administration	3	DOJ General Effective Communication	-	-
Police Administration	Police Administration	3	DOJ General Effective Communication	-	-
Police Administration	Police Administration	3	DOJ General Effective Communication	-	-
Police Administration	Police Administration	3	DOJ General Effective Communication	-	-
Police Administration	Police Administration	3	DOJ General Effective Communication	-	-
Police Administration	Police Administration	3	DOJ General Effective Communication	-	-
Police Administration	Police Administration	3	DOJ General Effective Communication	-	-
Police Administration	Police Administration	3	DOJ General Effective Communication	-	-
Police Administration	Police Administration	3	DOJ General Effective Communication	-	-
Police Administration	Police Administration	4	DOJ 911 and Emergency Communication Services	-	-
Police Administration	Police Administration	5	DOJ Website Accessibility	-	-
Police Administration	Police Administration	8	City ADA Supplemental Questionnaire	-	-
Police Administration	Police Administration	8	City ADA Supplemental Questionnaire	-	-
Police Administration	Police Administration	8	City ADA Supplemental Questionnaire	-	-
Police Administration	Police Administration	8	City ADA Supplemental Questionnaire	-	-
Police Administration	Police Administration	8	City ADA Supplemental Questionnaire	-	-
Police Administration	Police Administration	8	City ADA Supplemental Questionnaire	-	-
Police Administration	Police Administration	8	City ADA Supplemental Questionnaire	-	-
Police Administration	Police Administration	8	City ADA Supplemental Questionnaire	-	-
Police Administration	Police Administration	8	City ADA Supplemental Questionnaire	-	-
Police Administration	Police Administration	8	City ADA Supplemental Questionnaire	-	-
City Facilities	-	3	DOJ General Effective Communication	-	-
City Facilities	-	3	DOJ General Effective Communication	-	-
City Facilities	-	3	DOJ General Effective Communication	-	-
City Facilities	-	3	DOJ General Effective Communication	-	-
City Facilities	-	3	DOJ General Effective Communication	-	-
City Facilities	-	3	DOJ General Effective Communication	-	-
City Facilities	-	3	DOJ General Effective Communication	-	-
City Facilities	-	3	DOJ General Effective Communication	-	-
City Facilities	-	3	DOJ General Effective Communication	-	-
City Facilities	-	3	DOJ General Effective Communication	-	-
City Facilities	-	3	DOJ General Effective Communication	-	-
City Facilities	-	3	DOJ General Effective Communication	-	-
City Facilities	-	3	DOJ General Effective Communication	-	-

ADMINISTRATION	DEPARTMENT	FNO	FORM NAME	# QUES.	# ANS.
City Facilities	-	3	DOJ General Effective Communication	-	-
City Facilities	-	3	DOJ General Effective Communication	-	-
City Facilities	-	3	DOJ General Effective Communication	-	-
City Facilities	-	3	DOJ General Effective Communication	-	-
City Facilities	-	8	City ADA Supplemental Questionnaire	-	-
City Facilities	-	8	City ADA Supplemental Questionnaire	-	-
City Facilities	-	8	City ADA Supplemental Questionnaire	-	-
City Facilities	-	8	City ADA Supplemental Questionnaire	-	-
City Facilities	-	8	City ADA Supplemental Questionnaire	-	-
City Facilities	-	8	City ADA Supplemental Questionnaire	-	-
City Facilities	-	8	City ADA Supplemental Questionnaire	-	-
City Facilities	-	8	City ADA Supplemental Questionnaire	-	-
City Facilities	-	8	City ADA Supplemental Questionnaire	-	-
City Facilities	-	8	City ADA Supplemental Questionnaire	-	-
City Facilities	-	8	City ADA Supplemental Questionnaire	-	-
City Facilities	-	8	City ADA Supplemental Questionnaire	-	-
City Facilities	-	8	City ADA Supplemental Questionnaire	-	-
City Facilities	-	8	City ADA Supplemental Questionnaire	-	-
City Facilities	-	8	City ADA Supplemental Questionnaire	-	-
City Facilities	-	8	City ADA Supplemental Questionnaire	-	-
Public Works Administration	Water Resources	3	DOJ General Effective Communication	-	-
Public Works Administration	Water Resources	3	DOJ General Effective Communication	-	-
Public Works Administration	Water Resources	3	DOJ General Effective Communication	-	-
Public Works Administration	Water Resources	3	DOJ General Effective Communication	-	-
Public Works Administration	Water Resources	3	DOJ General Effective Communication	-	-
Public Works Administration	Water Resources	3	DOJ General Effective Communication	-	-
Public Works Administration	Water Resources	3	DOJ General Effective Communication	-	-
Public Works Administration	Water Resources	3	DOJ General Effective Communication	-	-
Public Works Administration	Water Resources	3	DOJ General Effective Communication	-	-

ADMINISTRATION	DEPARTMENT	FNO	FORM NAME	# QUES.	# ANS.
Public Works Administration	Water Resources	3	DOJ General Effective Communication	-	-
Public Works Administration	Water Resources	3	DOJ General Effective Communication	-	-
Public Works Administration	Water Resources	3	DOJ General Effective Communication	-	-
Public Works Administration	Water Resources	3	DOJ General Effective Communication	-	-
Public Works Administration	Water Resources	3	DOJ General Effective Communication	-	-
Public Works Administration	Water Resources	3	DOJ General Effective Communication	-	-
Public Works Administration	Water Resources	3	DOJ General Effective Communication	-	-
Public Works Administration	Water Resources	3	DOJ General Effective Communication	-	-
Public Works Administration	Water Resources	3	DOJ General Effective Communication	-	-
Public Works Administration	Water Resources	3	DOJ General Effective Communication	-	-
Public Works Administration	Water Resources	8	City ADA Supplemental Questionnaire	-	-
Public Works Administration	Water Resources	8	City ADA Supplemental Questionnaire	-	-
Public Works Administration	Water Resources	8	City ADA Supplemental Questionnaire	-	-
Public Works Administration	Water Resources	8	City ADA Supplemental Questionnaire	-	-
Public Works Administration	Water Resources	8	City ADA Supplemental Questionnaire	-	-
Public Works Administration	Water Resources	8	City ADA Supplemental Questionnaire	-	-
Public Works Administration	Water Resources	8	City ADA Supplemental Questionnaire	-	-
Public Works Administration	Water Resources	8	City ADA Supplemental Questionnaire	-	-
Public Works Administration	Water Resources	8	City ADA Supplemental Questionnaire	-	-
Public Works Administration	Water Resources	8	City ADA Supplemental Questionnaire	-	-
City Facilities	Water Resources	10	Existing Facilities Checklist	-	-
City Facilities	Water Resources	10	Existing Facilities Checklist	-	-
City Facilities	Water Resources	10	Existing Facilities Checklist	-	-
City Facilities	Water Resources	10	Existing Facilities Checklist	-	-
City Facilities	Water Resources	10	Existing Facilities Checklist	-	-
City Facilities	Water Resources	10	Existing Facilities Checklist	-	-
City Facilities	Water Resources	10	Existing Facilities Checklist	-	-
City Facilities	-	10	Existing Facilities Checklist	-	-

ADMINISTRATION	DEPARTMENT	FNO	FORM NAME	# QUES.	# ANS.
Mayor's Office	City Clerk's Office	3	DOJ General Effective Communication	-	-
Mayor's Office	City Clerk's Office	8	City ADA Supplemental Questionnaire	-	-
City Administration	Billing & Collections	3	DOJ General Effective Communication	-	-
City Administration	Billing & Collections	3	DOJ General Effective Communication	-	-
City Administration	Billing & Collections	3	DOJ General Effective Communication	-	-
City Administration	Billing & Collections	8	City ADA Supplemental Questionnaire	-	-
City Administration	Billing & Collections	8	City ADA Supplemental Questionnaire	-	-
City Administration	Billing & Collections	8	City ADA Supplemental Questionnaire	-	-
City Administration	Billing & Collections	8	City ADA Supplemental Questionnaire	-	-
City Council	City Council's Office	1	Quick Department Entrance Barriers Checklist	-	-
City Council	City Council's Office	3	DOJ General Effective Communication	-	-
City Council	City Council's Office	3	DOJ General Effective Communication	-	-
City Council	City Council's Office	3	DOJ General Effective Communication	-	-
City Council	City Council's Office	3	DOJ General Effective Communication	-	-
City Council	City Council's Office	8	City ADA Supplemental Questionnaire	-	-
City Council	City Council's Office	8	City ADA Supplemental Questionnaire	-	-
City Council	City Council's Office	8	City ADA Supplemental Questionnaire	-	-
City Council	City Council's Office	8	City ADA Supplemental Questionnaire	-	-
City Development Administration	-	3	DOJ General Effective Communication	-	-
City Development Administration	-	8	City ADA Supplemental Questionnaire	-	-
Neighborhood Affairs	-	3	DOJ General Effective Communication	-	-
Neighborhood Affairs	-	8	City ADA Supplemental Questionnaire	-	-
Neighborhood Affairs	-	3	DOJ General Effective Communication	-	-
Neighborhood Affairs	-	8	City ADA Supplemental Questionnaire	-	-
City Facilities	-	3	DOJ General Effective Communication	-	-
City Facilities	-	3	DOJ General Effective Communication	-	-
City Facilities	-	3	DOJ General Effective Communication	-	-
City Facilities	-	3	DOJ General Effective Communication	-	-
City Facilities	-	3	DOJ General Effective Communication	-	-
City Facilities	-	3	DOJ General Effective Communication	-	-
City Facilities	-	3	DOJ General Effective Communication	-	-
City Facilities	-	3	DOJ General Effective Communication	-	-
Leisure Services Administration	-	3	DOJ General Effective Communication	-	-
Leisure Services Administration	-	8	City ADA Supplemental Questionnaire	-	-
Leisure Services Administration	-	8	City ADA Supplemental Questionnaire	-	-

ADMINISTRATION	DEPARTMENT	FNO	FORM NAME	# QUES.	# ANS.
Leisure Services Administration	-	8	City ADA Supplemental Questionnaire	-	-
Leisure Services Administration	-	8	City ADA Supplemental Questionnaire	-	-
Leisure Services Administration	-	8	City ADA Supplemental Questionnaire	-	-
Leisure Services Administration	-	8	City ADA Supplemental Questionnaire	-	-
Leisure Services Administration	-	8	City ADA Supplemental Questionnaire	-	-
Leisure Services Administration	-	8	City ADA Supplemental Questionnaire	-	-
Leisure Services Administration	-	8	City ADA Supplemental Questionnaire	-	-
City Facilities	-	14	Golf Facilities	-	-
City Facilities	-	14	Golf Facilities	-	-
City Facilities	-	14	Golf Facilities	-	-
Mayor's Office	Mayor's Office	3	DOJ General Effective Communication	-	-
Mayor's Office	Mayor's Office	3	DOJ General Effective Communication	-	-
Neighborhood Affairs	-	3	DOJ General Effective Communication	-	-
Mayor's Office	Mayor's Office	8	City ADA Supplemental Questionnaire	-	-
Neighborhood Affairs	-	8	City ADA Supplemental Questionnaire	-	-
City Facilities	-	12	Play Areas	-	-
City Facilities	-	12	Play Areas	-	-
City Facilities	-	12	Play Areas	-	-
City Facilities	-	12	Play Areas	-	-
City Facilities	-	12	Play Areas	-	-
City Facilities	-	12	Play Areas	-	-
City Facilities	-	12	Play Areas	-	-
City Facilities	-	12	Play Areas	-	-
City Facilities	-	12	Play Areas	-	-
City Facilities	-	12	Play Areas	-	-
City Facilities	-	12	Play Areas	-	-
City Facilities	-	12	Play Areas	-	-
City Facilities	-	12	Play Areas	-	-
City Facilities	-	12	Play Areas	-	-

ADMINISTRATION	DEPARTMENT	FNO	FORM NAME	# QUES.	# ANS.
City Facilities	-	12	Play Areas	-	-
City Facilities	-	12	Play Areas	-	-
City Facilities	-	12	Play Areas	-	-
City Facilities	-	12	Play Areas	-	-
City Facilities	-	12	Play Areas	-	-
City Facilities	-	12	Play Areas	-	-
City Facilities	-	12	Play Areas	-	-
City Facilities	-	12	Play Areas	-	-
City Facilities	-	12	Play Areas	-	-
City Facilities	-	12	Play Areas	-	-
City Facilities	-	12	Play Areas	-	-
City Facilities	-	12	Play Areas	-	-
City Facilities	-	12	Play Areas	-	-
City Facilities	-	12	Play Areas	-	-
City Facilities	-	12	Play Areas	-	-
City Facilities	-	12	Play Areas	-	-
City Facilities	-	12	Play Areas	-	-
City Facilities	-	12	Play Areas	-	-
City Facilities	-	12	Play Areas	-	-
City Facilities	-	12	Play Areas	-	-
City Facilities	-	12	Play Areas	-	-
City Facilities	-	12	Play Areas	-	-
City Facilities	-	12	Play Areas	-	-
City Facilities	-	12	Play Areas	-	-
City Facilities	City Hall	10	Existing Facilities Checklist	-	-
City Facilities	-	10	Existing Facilities Checklist	-	-
City Facilities	-	10	Existing Facilities Checklist	-	-
City Facilities	-	12	Play Areas	-	-
City Facilities	-	12	Play Areas	-	-
City Facilities	-	12	Play Areas	-	-
City Facilities	-	12	Play Areas	-	-
City Facilities	-	12	Play Areas	-	-

ADMINISTRATION	DEPARTMENT	FNO	FORM NAME	# QUES.	# ANS.
City Facilities	-	12	Play Areas	-	-
City Facilities	-	12	Play Areas	-	-
City Facilities	-	12	Play Areas	-	-
City Facilities	-	12	Play Areas	-	-
City Facilities	-	12	Play Areas	-	-
City Facilities	Playground	12	Play Areas	-	-
City Facilities	-	12	Play Areas	-	-
City Facilities	-	12	Play Areas	-	-
City Facilities	-	12	Play Areas	-	-
City Facilities	-	12	Play Areas	-	-
Mayor's Office	-	3	DOJ General Effective Communication	-	-
Mayor's Office	-	3	DOJ General Effective Communication	-	-
Mayor's Office	-	8	City ADA Supplemental Questionnaire	-	-
Mayor's Office	-	8	City ADA Supplemental Questionnaire	-	-
City Facilities	-	13	Boating Facilities	-	-
City Facilities	-	12	Play Areas	-	-
City Facilities	-	12	Play Areas	-	-
City Facilities	-	12	Play Areas	-	-
City Facilities	-	12	Play Areas	-	-
City Facilities	-	3	DOJ General Effective Communication	-	-
City Facilities	-	3	DOJ General Effective Communication	-	-
City Facilities	-	8	City ADA Supplemental Questionnaire	-	-
City Facilities	-	8	City ADA Supplemental Questionnaire	-	-
City Facilities	-	10	Existing Facilities Checklist	-	-
City Facilities	-	10	Existing Facilities Checklist	-	-
City Administration	Human Resources - Administration	1	Quick Department Entrance Barriers Checklist	-	-
Public Works Administration	-	1	Quick Department Entrance Barriers Checklist	-	-
City Administration	City Administration Office	2	DOJ ADA Administrative Issues	-	-
City Administration	City Administration Office	2	DOJ ADA Administrative Issues	-	-
City Administration	City Administration Office	2	DOJ ADA Administrative Issues	-	-
City Administration	City Administration Office	2	DOJ ADA Administrative Issues	-	-
City Administration	City Administration Office	2	DOJ ADA Administrative Issues	-	-
City Administration	City Administration Office	2	DOJ ADA Administrative Issues	-	-

ADMINISTRATION	DEPARTMENT	FNO	FORM NAME	# QUES.	# ANS.
City Administration	City Administration Office	2	DOJ ADA Administrative Issues	-	-
City Administration	City Administration Office	2	DOJ ADA Administrative Issues	-	-
City Administration	-	3	DOJ General Effective Communication	-	-
City Administration	-	3	DOJ General Effective Communication	-	-
City Administration	-	3	DOJ General Effective Communication	-	-
City Administration	-	3	DOJ General Effective Communication	-	-
City Administration	-	3	DOJ General Effective Communication	-	-
City Administration	-	3	DOJ General Effective Communication	-	-
City Administration	-	3	DOJ General Effective Communication	-	-
City Administration	-	3	DOJ General Effective Communication	-	-
City Facilities	-	3	DOJ General Effective Communication	-	-
City Facilities	-	3	DOJ General Effective Communication	-	-
Mayor's Office	-	3	DOJ General Effective Communication	-	-
Public Works Administration	-	3	DOJ General Effective Communication	-	-
Public Works Administration	-	3	DOJ General Effective Communication	-	-
Public Works Administration	-	6	DOJ Curb Ramps and Pedestrian Crossing	-	-
Public Works Administration	-	6	DOJ Curb Ramps and Pedestrian Crossing	-	-
City Administration	Human Resources – Administration	8	City ADA Supplemental Questionnaire	-	-
City Administration	-	8	City ADA Supplemental Questionnaire	-	-
City Administration	-	8	City ADA Supplemental Questionnaire	-	-
City Administration	-	8	City ADA Supplemental Questionnaire	-	-
City Administration	-	8	City ADA Supplemental Questionnaire	-	-
City Administration	-	8	City ADA Supplemental Questionnaire	-	-
City Administration	-	8	City ADA Supplemental Questionnaire	-	-
City Administration	-	8	City ADA Supplemental Questionnaire	-	-
City Administration	-	8	City ADA Supplemental Questionnaire	-	-
City Administration	-	8	City ADA Supplemental Questionnaire	-	-

ADMINISTRATION	DEPARTMENT	FNO	FORM NAME	# QUES.	# ANS.
City Administration	Human Resources - Administration	8	City ADA Supplemental Questionnaire	-	-
City Facilities	-	8	City ADA Supplemental Questionnaire	-	-
City Facilities	-	8	City ADA Supplemental Questionnaire	-	-
Mayor's Office	-	8	City ADA Supplemental Questionnaire	-	-
Public Works Administration	-	8	City ADA Supplemental Questionnaire	-	-
Public Works Administration	-	8	City ADA Supplemental Questionnaire	-	-
Public Works Administration	-	8	City ADA Supplemental Questionnaire	-	-
City Facilities	-	10	Existing Facilities Checklist	-	-
City Facilities	-	10	Existing Facilities Checklist	-	-
City Facilities	-	10	Existing Facilities Checklist	-	-
Public Works Administration	-	10	Existing Facilities Checklist	-	-
Leisure Services Administration	-	3	DOJ General Effective Communication	-	-
Leisure Services Administration	-	3	DOJ General Effective Communication	-	-
Leisure Services Administration	-	3	DOJ General Effective Communication	-	-
Leisure Services Administration	-	3	DOJ General Effective Communication	-	-
Leisure Services Administration	-	3	DOJ General Effective Communication	-	-
Leisure Services Administration	-	3	DOJ General Effective Communication	-	-
Leisure Services Administration	-	8	City ADA Supplemental Questionnaire	-	-
Leisure Services Administration	-	8	City ADA Supplemental Questionnaire	-	-
Leisure Services Administration	-	8	City ADA Supplemental Questionnaire	-	-
Leisure Services Administration	-	8	City ADA Supplemental Questionnaire	-	-
Leisure Services Administration	-	8	City ADA Supplemental Questionnaire	-	-
Leisure Services Administration	-	8	City ADA Supplemental Questionnaire	-	-
City Facilities	-	10	Existing Facilities Checklist	-	-
City Facilities	-	10	Existing Facilities Checklist	-	-
City Facilities	-	10	Existing Facilities Checklist	-	-
City Facilities	Library	10	Existing Facilities Checklist	-	-
City Facilities	-	10	Existing Facilities Checklist	-	-
City Facilities	-	10	Existing Facilities Checklist	-	-
City Facilities	-	10	Existing Facilities Checklist	-	-

ADMINISTRATION	DEPARTMENT	FNO	FORM NAME	# QUES.	# ANS.
Mayor's Office	-	3	DOJ General Effective Communication	-	-
Mayor's Office	-	3	DOJ General Effective Communication	-	-
Mayor's Office	-	5	DOJ Website Accessibility	-	-
Mayor's Office	-	5	DOJ Website Accessibility	-	-
Mayor's Office	-	8	City ADA Supplemental Questionnaire	-	-
Mayor's Office	Marketing	8	City ADA Supplemental Questionnaire	-	-
City Development Administration	-	3	DOJ General Effective Communication	-	-
City Development Administration	-	3	DOJ General Effective Communication	-	-
City Development Administration	-	3	DOJ General Effective Communication	-	-
City Development Administration	Planning & Economic Development	3	DOJ General Effective Communication	-	-
City Development Administration	-	8	City ADA Supplemental Questionnaire	-	-
City Development Administration	-	8	City ADA Supplemental Questionnaire	-	-
City Development Administration	-	8	City ADA Supplemental Questionnaire	-	-
Leisure Services Administration	Parks & Recreation	3	DOJ General Effective Communication	-	-
Leisure Services Administration	-	8	City ADA Supplemental Questionnaire	-	-
City Facilities	-	10	Existing Facilities Checklist	-	-
City Facilities	-	15	Ball Fields	-	-
City Facilities	-	15	Ball Fields	-	-
City Facilities	-	15	Ball Fields	-	-
City Facilities	-	15	Ball Fields	-	-
City Facilities	-	15	Ball Fields	-	-
City Facilities	-	15	Ball Fields	-	-
City Facilities	-	15	Ball Fields	-	-
City Facilities	-	15	Ball Fields	-	-
City Facilities	-	15	Ball Fields	-	-
City Facilities	-	15	Ball Fields	-	-
City Facilities	-	15	Ball Fields	-	-
City Facilities	-	15	Ball Fields	-	-

ADMINISTRATION	DEPARTMENT	FNO	FORM NAME	# QUES.	# ANS.
City Facilities	-	15	Ball Fields	-	-
City Facilities	-	15	Ball Fields	-	-
City Facilities	-	15	Ball Fields	-	-
City Facilities	-	15	Ball Fields	-	-
City Facilities	-	15	Ball Fields	-	-
City Facilities	-	15	Ball Fields	-	-
City Facilities	-	15	Ball Fields	-	-
City Facilities	-	15	Ball Fields	-	-
City Facilities	-	15	Ball Fields	-	-
City Facilities	-	15	Ball Fields	-	-
City Facilities	-	15	Ball Fields	-	-
City Facilities	-	3	DOJ General Effective Communication	-	-
City Facilities	-	3	DOJ General Effective Communication	-	-
City Facilities	-	3	DOJ General Effective Communication	-	-
City Facilities	-	3	DOJ General Effective Communication	-	-
City Facilities	-	3	DOJ General Effective Communication	-	-
City Facilities	-	3	DOJ General Effective Communication	-	-
City Facilities	-	3	DOJ General Effective Communication	-	-
City Facilities	-	3	DOJ General Effective Communication	-	-
City Facilities	-	3	DOJ General Effective Communication	-	-
City Facilities	-	8	City ADA Supplemental Questionnaire	-	-
City Facilities	-	8	City ADA Supplemental Questionnaire	-	-
City Facilities	-	8	City ADA Supplemental Questionnaire	-	-
City Facilities	-	8	City ADA Supplemental Questionnaire	-	-
City Facilities	-	8	City ADA Supplemental Questionnaire	-	-

ADMINISTRATION	DEPARTMENT	FNO	FORM NAME	# QUES.	# ANS.
City Facilities	-	8	City ADA Supplemental Questionnaire	-	-
City Facilities	-	8	City ADA Supplemental Questionnaire	-	-
City Facilities	-	8	City ADA Supplemental Questionnaire	-	-
City Facilities	-	8	City ADA Supplemental Questionnaire	-	-
City Facilities	-	11	Swimming Pools	-	-
City Facilities	-	11	Swimming Pools	-	-
City Facilities	-	11	Swimming Pools	-	-
City Facilities	-	11	Swimming Pools	-	-
City Facilities	-	11	Swimming Pools	-	-
City Facilities	-	11	Swimming Pools	-	-
City Facilities	-	11	Swimming Pools	-	-
City Facilities	-	11	Swimming Pools	-	-
City Facilities	-	11	Swimming Pools	-	-
City Facilities	-	10	Existing Facilities Checklist	-	-
City Facilities	-	10	Existing Facilities Checklist	-	-
City Facilities	-	10	Existing Facilities Checklist	-	-
City Development Administration	-	1	Quick Department Entrance Barriers Checklist	-	-
City Development Administration	-	3	DOJ General Effective Communication	-	-
City Development Administration	-	8	City ADA Supplemental Questionnaire	-	-
City Administration	-	1	Quick Department Entrance Barriers Checklist	-	-
City Administration	-	3	DOJ General Effective Communication	-	-
City Administration	-	3	DOJ General Effective Communication	-	-
City Administration	-	3	DOJ General Effective Communication	-	-
City Administration	-	3	DOJ General Effective Communication	-	-
City Administration	-	8	City ADA Supplemental Questionnaire	-	-
City Administration	-	8	City ADA Supplemental Questionnaire	-	-
City Facilities	-	10	Existing Facilities Checklist	-	-
City Facilities	-	10	Existing Facilities Checklist	-	-
City Facilities	-	10	Existing Facilities Checklist	-	-
City Facilities	-	10	Existing Facilities Checklist	-	-

ADMINISTRATION	DEPARTMENT	FNO	FORM NAME	# QUES.	# ANS.
City Facilities	-	10	Existing Facilities Checklist	-	-
City Facilities	-	10	Existing Facilities Checklist	-	-
City Facilities	-	10	Existing Facilities Checklist	-	-
City Facilities	-	10	Existing Facilities Checklist	-	-
City Facilities	-	10	Existing Facilities Checklist	-	-
City Facilities	-	10	Existing Facilities Checklist	-	-
City Facilities	-	10	Existing Facilities Checklist	-	-
City Facilities	-	10	Existing Facilities Checklist	-	-
City Facilities	-	10	Existing Facilities Checklist	-	-
City Facilities	-	10	Existing Facilities Checklist	-	-
City Facilities	-	10	Existing Facilities Checklist	-	-
City Facilities	-	10	Existing Facilities Checklist	-	-
City Facilities	-	10	Existing Facilities Checklist	-	-
City Facilities	-	10	Existing Facilities Checklist	-	-
Fire Administration	Fire Administration	3	DOJ General Effective Communication	-	-
Fire Administration	-	3	DOJ General Effective Communication	-	-
Fire Administration	-	3	DOJ General Effective Communication	-	-
Fire Administration	-	3	DOJ General Effective Communication	-	-
Fire Administration	-	3	DOJ General Effective Communication	-	-
Fire Administration	-	3	DOJ General Effective Communication	-	-
Fire Administration	-	3	DOJ General Effective Communication	-	-
Fire Administration	-	3	DOJ General Effective Communication	-	-
Fire Administration	-	3	DOJ General Effective Communication	-	-
Fire Administration	-	3	DOJ General Effective Communication	-	-
Fire Administration	-	3	DOJ General Effective Communication	-	-
Fire Administration	-	3	DOJ General Effective Communication	-	-
Fire Administration	-	5	DOJ Website Accessibility	-	-
Fire Administration	Fire Administration	7	DOJ Emergency Management	-	-
Fire Administration	-	8	City ADA Supplemental Questionnaire	-	-
Fire Administration	-	8	City ADA Supplemental Questionnaire	-	-
Fire Administration	-	8	City ADA Supplemental Questionnaire	-	-
Fire Administration	-	8	City ADA Supplemental Questionnaire	-	-
Fire Administration	-	8	City ADA Supplemental Questionnaire	-	-
Fire Administration	-	8	City ADA Supplemental Questionnaire	-	-
Fire Administration	-	8	City ADA Supplemental Questionnaire	-	-

ADMINISTRATION	DEPARTMENT	FNO	FORM NAME	# QUES.	# ANS.
Fire Administration	-	8	City ADA Supplemental Questionnaire	-	-
Fire Administration	-	8	City ADA Supplemental Questionnaire	-	-
Fire Administration	-	8	City ADA Supplemental Questionnaire	-	-
Fire Administration	-	8	City ADA Supplemental Questionnaire	-	-
Fire Administration	-	8	City ADA Supplemental Questionnaire	-	-
Fire Administration	-	8	City ADA Supplemental Questionnaire	-	-
Neighborhood Affairs	-	3	DOJ General Effective Communication	-	-
Neighborhood Affairs	-	3	DOJ General Effective Communication	-	-
Neighborhood Affairs	-	3	DOJ General Effective Communication	-	-
Neighborhood Affairs	-	3	DOJ General Effective Communication	-	-
Neighborhood Affairs	-	8	City ADA Supplemental Questionnaire	-	-
Neighborhood Affairs	-	8	City ADA Supplemental Questionnaire	-	-
Neighborhood Affairs	-	8	City ADA Supplemental Questionnaire	-	-
City Facilities	Fire Department Headquarters	10	Existing Facilities Checklist	-	-
City Facilities	Fire Station 01	10	Existing Facilities Checklist	-	-
City Facilities	Fire Station 02	10	Existing Facilities Checklist	-	-
City Facilities	-	10	Existing Facilities Checklist	-	-
City Facilities	-	10	Existing Facilities Checklist	-	-
City Facilities	-	10	Existing Facilities Checklist	-	-
City Facilities	-	10	Existing Facilities Checklist	-	-
City Facilities	-	10	Existing Facilities Checklist	-	-
City Facilities	-	10	Existing Facilities Checklist	-	-
City Facilities	-	10	Existing Facilities Checklist	-	-
City Facilities	-	10	Existing Facilities Checklist	-	-
City Facilities	-	10	Existing Facilities Checklist	-	-
City Facilities	-	10	Existing Facilities Checklist	-	-
Public Works Administration	-	3	DOJ General Effective Communication	-	-
Public Works Administration	-	6	DOJ Curb Ramps and Pedestrian Crossing	-	-
Public Works Administration	-	8	City ADA Supplemental Questionnaire	-	-
City Administration	-	9	City Human Resources - Employment Services	-	-
City Administration	-	3	DOJ General Effective Communication	-	-
City Administration	-	3	DOJ General Effective Communication	-	-
City Administration	-	3	DOJ General Effective Communication	-	-
City Administration	-	3	DOJ General Effective Communication	-	-
City Administration	-	3	DOJ General Effective Communication	-	-
City Administration	-	5	DOJ Website Accessibility	-	-
City Administration	-	8	City ADA Supplemental Questionnaire	-	-
City Administration	-	8	City ADA Supplemental Questionnaire	-	-
City Administration	-	8	City ADA Supplemental Questionnaire	-	-
City Administration	-	8	City ADA Supplemental Questionnaire	-	-

ADMINISTRATION	DEPARTMENT	FNO	FORM NAME	# QUES.	# ANS.
City Administration	-	8	City ADA Supplemental Questionnaire	-	-
City Administration	-	3	DOJ General Effective Communication	-	-
City Administration	-	3	DOJ General Effective Communication	-	-
City Administration	-	8	City ADA Supplemental Questionnaire	-	-
City Administration	-	8	City ADA Supplemental Questionnaire	-	-
City Facilities	-	13	Boating Facilities	-	-
City Facilities	-	13	Boating Facilities	-	-
Public Works Administration	-	3	DOJ General Effective Communication	-	-
Public Works Administration	-	8	City ADA Supplemental Questionnaire	-	-
City Facilities	-	12	Play Areas	-	-
City Facilities	-	12	Play Areas	-	-
City Facilities	-	12	Play Areas	-	-
City Facilities	-	12	Play Areas	-	-
City Facilities	-	12	Play Areas	-	-
City Facilities	-	12	Play Areas	-	-
City Facilities	-	12	Play Areas	-	-
City Facilities	-	12	Play Areas	-	-
City Facilities	-	12	Play Areas	-	-
City Facilities	-	12	Play Areas	-	-
City Facilities	-	12	Play Areas	-	-
City Facilities	-	12	Play Areas	-	-
City Facilities	-	12	Play Areas	-	-
City Facilities	-	12	Play Areas	-	-
City Facilities	-	12	Play Areas	-	-
Public Works Administration	Sanitation	3	DOJ General Effective Communication	-	-
Public Works Administration	-	3	DOJ General Effective Communication	-	-
Public Works Administration	-	3	DOJ General Effective Communication	-	-
Public Works Administration	-	8	City ADA Supplemental Questionnaire	-	-

ADMINISTRATION	DEPARTMENT	FNO	FORM NAME	# QUES.	# ANS.
Public Works Administration	-	8	City ADA Supplemental Questionnaire	-	-
Public Works Administration	-	8	City ADA Supplemental Questionnaire	-	-
City Facilities	-	10	Existing Facilities Checklist	-	-

SECTION V
APPENDICES
APPENDIX C
ADA SELF-EVALUATION PROCESS TEAM MEMBERS

ADA TASK FORCE MEMBERS	
(Megan Nelson)	Mayor's Office
(Megan Nelson)	City Administration Office
(Reid Huttunen)	Parks & Recreation
(Jason Stordahl)	Public Works
(Keith Mykleseth)	Water & Light
(Michael Hedlund)	Police Department
(Gary Larson)	Fire Department
(Seth Baune)	Facilities Management
(CHSC President)	Community Resident and CHSC Member
(Cory Birkholz)	City ADA Consultant

ADA SELF EVALUATION PROCESS ADVISORY TEAM	
(Ron Galstad)	City Legal Department

ADA ACCESSIBILITY LIAISON MEMBERS	
Mayor's Office	*(Megan Nelson)*
City Administration Office	*(Megan Nelson)*
Parks & Recreation	*(Reid Huttunen)*
Public Works	*(Jason Stordahl)*
Water & Light	*(Keith Mykleseth)*
Fire Department	*(Gary Larson)*
Police Department	*(Michael Hedlund)*
Facilities Management	*(Seth Baune)*
Human Resources Department	*(Terry Knudson)*

COORDINATED HUMAN SERVICES COMMITTEE (CHSC)
(Chair)
(Vice Chair)

SECTION V
APPENDICES
APPENDIX D
REASONABLE ACCOMMODATION POLICY

City of EAST GRAND FORKS
Policy for Applicant/Employee Requests for Reasonable Accommodation

I. POLICY.

It is the policy of the City of East Grand Forks (the "City") to provide accommodations for applicants and employees with disabilities and to return injured employees to work as soon as they can perform their assigned duties safely, efficiently, and effectively. Pursuant to Section 22-19 of the City Code and Section 2-1 of the City's Rules and Regulations of the Personnel Management System (the "Rules and Regulations"; (*DATE*), the City shall not discriminate against any person in recruitment, examination, appointment, training, promotion, retention, or any other personnel action because of such person's disability. Further, it is the policy of the City to accommodate applicants and employees with disabilities in the employment process to provide equal opportunities to compete for employment and advancement within the City's workforce.

The City is committed to the spirit and intent of the Americans with Disabilities Act of 1990 (ADA), , and other relevant laws affecting individuals with disabilities and their rights to enjoy equal opportunity. It is therefore the policy of the City to provide reasonable workplace accommodations to qualified City employees and applicants with disabilities.

II. DESIGNATION.

Nancy Ellis, the City's ADA Coordinator, is designated to administer and coordinate the City's obligations under the ADA with respect to employees and applicants for employment. She shall consult regularly with staff in the City's Legal and Human Resources Departments to ensure that the City's policies and procedures comply with the ADA and related legislation.

The ADA Coordinator is responsible for processing requests for reasonable accommodation. The City's Human Resources Director will designate another staff member to act as a back-up for the ADA Coordinator to process requests when the Coordinator is unavailable for any length of time (e.g. the ADA Coordinator is on vacation or out on extended leave). The term "ADA Coordinator," as used herein, shall include his or her designee unless otherwise stated.

III. ACCOMMODATION REQUEST PROCEDURE.

The employee or applicant is responsible to request a reasonable accommodation. The request can be made by submitting a completed Reasonable Accommodation Request Form to the ADA Coordinator.

If an individual makes a reasonable accommodation request to someone other than the ADA Coordinator, such as his/her supervisor or manager, that supervisor/manager shall forward the request to the ADA Coordinator immediately. A request does not have to include any special words, such as "reasonable accommodation," "disability," or "Americans with Disabilities Act/ADA." A family member, health professional, or other representative may request an accommodation on behalf of an employee or applicant.

When an oral request is made, the Coordinator must still ensure that the appropriate section(s) of the Reasonable Accommodation Request Form is filled out. If the requestor does not fill out the form, the ADA Coordinator must do so and have the requestor sign the completed form as soon as practicable.

Forms are available on the City's Intranet or from the Human Resources Department and will be made available in alternate format as requested. Employees and applicants may contact the ADA Coordinator

directly if they have questions, concerns, or are unsure of how the City's reasonable accommodation policy applies to their particular situation.

IV. DETERMINATION OF DISABILITY.

Upon receiving a request for a reasonable accommodation, if the requestor's disability and/or need for accommodation are not obvious or already known, the ADA Coordinator will begin to assess whether the individual has a covered disability that requires accommodation. A disability is obvious or already known when it is clearly visible or the individual previously provided medical information showing that the condition meets the ADA definition. It is the responsibility of the applicant/employee to provide appropriate medical information as requested where the disability and/or need for accommodation are not obvious or already known. Only the ADA Coordinator may determine whether medical information is needed and, if so, may ask the requestor to sign a limited release permitting the release of the necessary information from the appropriate medical provider/health professional. If the requestor has already submitted medical documentation in connection with a previous request for accommodation, they should immediately inform the ADA Coordinator of this fact.

For purposes of accommodation requests made pursuant to this policy, an individual with a disability is a person who (1) has a physical or mental impairment that substantially limits one or more major life activities, or (2) has a record of such impairment.

V. CONFIDENTIALITY.

All medical information obtained for the purpose of assessing accommodation requests shall be maintained in separate, secured files. They will be treated as confidential medical records, except that:

- **A.** The ADA Coordinator may share certain information with a requestor's supervisor(s) as necessary to make appropriate determinations regarding work restrictions or accommodations; and
- **B.** First aid and safety personnel may be informed, when appropriate.

VI. DETERMINATION OF QUALIFICATIONS.

When necessary, a review will be conducted by the appropriate Human Resources Department staff to determine if the individual requesting the reasonable accommodation is a Qualified Individual with a Disability. For purposes of this policy, a Qualified Individual with a Disability is one who satisfies the requisite skill, experience, education and other job-related requirements of the employment position he/she holds or desires and who, with or without reasonable accommodation, can perform the essential functions of such position.

VII. DETERMINATION OF REASONABLE ACCOMMODATION.

The following steps will be taken in determining a reasonable accommodation:

- **A.** The ADA Coordinator will meet with the employee or applicant to explore how work-related limitations might be overcome through reasonable accommodation. During this meeting, the ADA Coordinator will establish and communicate timelines, and provide information regarding rights and responsibilities to the individual requesting the reasonable accommodation. The ADA Coordinator will also consult, as necessary, with health care providers, vocational rehabilitation specialists, and/or other individuals whose expertise may contribute to the analysis.
- **B.** An analysis of the particular job may be performed to determine its purpose and essential functions. This analysis may include, but is not limited to, a review of the job description and essential job functions and interviews with other employees and management as required. Some applicants or employees may be required to perform actual or simulated tasks relevant to the position in question.

C. Additional meetings may be conducted to secure additional information, explore potential accommodations, and to make recommendations for what, if any, reasonable accommodations will be provided.

D. Reasonable accommodations may include, but are not limited to: job restructuring, part-time or modified work schedules, reassignment to a vacant position, or acquisition or modifications of equipment or devices. The City is not required to reallocate the essential functions of a job, but may restructure a job by altering when and/or how an essential function is performed. Whenever possible, the applicant's or employee's preferred method of accommodation will be considered.

E. The City will process requests and, where appropriate, provide accommodation in as short a period as reasonably possible. In certain circumstances, a request for a reasonable accommodation requires an expedited review and decision. This may include where a reasonable accommodation is needed:

- **to enable an applicant to apply for a job**. Depending on the timetable for receiving applications, conducting interviews, taking tests, and making hiring decisions, there may be a need to expedite a request for reasonable accommodation to ensure that an applicant with a disability has an equal opportunity to apply for a job.
- **to enable an employee to attend a meeting scheduled to occur soon**. For example, an employee may need a sign language interpreter for a meeting scheduled to take place in five days.

F. Under certain extenuating circumstances, the time for processing a request will be extended as reasonably necessary. This includes circumstances that could not reasonably have been anticipated or avoided in advance of the request, or that are beyond the City's ability to control. Extensions will be limited to circumstances where they are absolutely necessary and only for as long as required to deal with the extenuating circumstance.

VIII. IMPLEMENTATION.

Once a decision has been made, the ADA Coordinator shall complete a Reasonable Accommodation Resolution Form. A copy of this completed form will be provided to the individual requesting the accommodation. Individuals dissatisfied with the resolution of their request may ask for reconsideration of the decision as instructed on the Resolution Form. Forms are available on the City's Intranet or from the Human Resources Department and will be made available in alternate format as requested.

When a determination has been made that an employee cannot be reasonably accommodated in their current position, the Human Resources contact or designee shall meet with the employee and, over a ninety (90)-day period, assist the employee with seeking positions that may be suitable considering the employee's skills and/or restrictions in accordance with Section 5-16(D) of the Rules and Regulations. If a suitable position is not identified, Human Resources may issue a non-disciplinary separation.

Employees placed in new positions will be required to complete a six-month evaluation period. Performance problems unrelated to accommodation issues will be handled through the normal disciplinary process(es). If, during the six-month evaluation period, an employee has not performed the essential functions of the position in a satisfactory manner, with or without reasonable accommodation(s), a non-disciplinary separation shall be issued.

If the employee's disability and/or need for accommodation is the result of a workplace injury, the provisions of Section 5-16 of the City's Rules and Regulations shall apply unless otherwise stated in an applicable collective bargaining agreement.

IX. FOLLOW-UP.

Ongoing follow-up will be provided as needed by the ADA Coordinator and will be handled on a case-by-case basis to ensure communication among all affected parties.

SECTION V APPENDICES
APPENDIX E

CITY OF EAST GRAND FORKS

ADA Resolution of Reasonable Accommodation Request Form

Instructions: Items 1 -3 must be completed by the ADA coordinator or Designee. Complete items 4 – 7 if applicable.

1. Name of Individual requesting reasonable accommodation: _____

2. Accommodation(s) requested: _____

_____

3. Accommodation(s):

_____ Approved as specifically requested.

_____ Approved, but different from original request. *

_____ Denied.

*If the approved accommodation is different from the one(s) originally requested, identify the alternative accommodation(s): _____

_____

4. If an alternative accommodation was offered, indicate whether it was:

_____ Accepted.

_____ Rejected.

5. Request denied because (may check more than one box):

- Requester does not have a disability. ☐
- Accommodation ineffective. ☐
- Accommodation would cause undue hardship. ☐
- Medical documentation inadequate. ☐
- Accommodation would require removal of essential function. ☐
- Accommodation would require lowering performance or production standard. ☐
- Other (please identify). _____ ☐

6. Detailed reason(s) for denial (must be specific, e.g., why accommodation would be ineffective or cause undue hardship): _____

_____

_____

7. If the ADA Coordinator or Designee offered an accommodation that is different from the one originally requested, explain (a) the reasons for the denial of the accommodation originally requested; and (b) why the alternative accommodation would be effective: _____

_____

An individual who disagrees with the resolution of the request may ask the City's Human Resources Director to reconsider that decision within ten (10) business days of the date written below. Note that requesting reconsideration does not extend the time limits for initiating administrative, statutory or collective bargaining claims.

_____ _____

Signature of ADA Coordinator or Designee ***Date Reasonable Accommodation Denied / Approved***

SECTION V- APPENDICES APPENDIX F

THE AMERICANS WITH DISABILITIES ACT GRIEVANCE PROCEDURE

This Grievance Procedure is established to meet the requirements of the Americans with Disabilities Act of 1990 ("ADA"). It may be used by anyone who wishes to file a complaint alleging discrimination on the basis of disability in the provision of services, activities, programs, or benefits by the City of East Grand Forks, Minnesota. The City of East Grand Forks Rules & Regulations govern employment-related complaints of disability discrimination.

The complaint should be in writing and contain information about the alleged discrimination such as name, address, phone number of complainant and location, date, and description of the complaint. Alternative means of filing complaints, such as personal interviews or an audio recording(s) of the complaint will be made available for persons with disabilities upon request.

The complaint should be submitted by the grievant and/or his/her designee as soon as possible but no later than 60 calendar days after the alleged violation to:

Nancy Ellis
ADA Coordinator
City of East Grand Forks
City Planner
600 DeMers Ave.
East Grand Forks, MN 56721
Phone (218) 773-2208/ Fax (218) 773-2507
nellis@egf.mn

Within 15 calendar days after receipt of the complaint, The ADA Coordinator or designee will meet with the complainant to discuss the complaint and possible resolutions. Within 15 calendar days of the meeting, *the ADA Coordinator* or designee will respond in writing, and where appropriate, in a format accessible to the complainant, such as large print, Braille, or audio recording.

If the response by the ADA Coordinator or designee does not satisfactorily resolve the issue, the complainant and/or his/her designee may appeal the decision within 15 calendar days after receipt of the response to the Human Resources contact or his/her designee.

Within 15 calendar days after receipt of the appeal, the Human Resources contact or his/her designee will meet with the complainant to discuss the complaint and possible resolutions. Within 15 calendar days after the meeting, the Human Resources contact or his/her designee will respond in writing, and, where appropriate, in a format accessible to the complainant, with a final resolution of the complaint.

All written complaints received by the ADA Coordinator or designee, appeals to the Human Resources contact or his/her designee, and responses from these two offices will be retained by the City of East Grand Forks for at least three years.

ADA DISCRIMINATION COMPLAINT FORM

Title II of the Americans with Disabilities Act (ADA)
Section 504 of the Rehabilitation Act of 1973

Please fill out this form completely, in black ink or type. Sign and return to the address below:

Name of Person Making Complaint: _____

Address: _____

City: _____ State: _____ Zip: _____ Telephone Number: _____

E-Mail Address: _____

If complainant is not the individual completing this form, please enter your information:

Name: _____ Telephone Number: _____

Other Contact Information: _____

Describe Reason of Complaint: _____

_____

_____

_____

_____

_____

_____

Signature: _____ Date: _____

PLEASE RETURN COMPLETED FORM TO:

Nancy Ellis, City Planner
ADA Coordinator
City of East Grand Forks
600 DeMers Ave.
East Grand Forks, MN 56721
Phone (218) 773-2208/ Fax (218) 773-2507
nellis@egf.mn

SECTION V- APPENDICES
APPENDIX G
ADA PUBLIC NOTICE
CITY OF EAST GRAND FORKS

AMERICANS WITH DISABILITIES ACT (ADA) PUBLIC NOTICE

In accordance with the requirements of Title II of the Americans with Disabilities Act of 1990, the City of East Grand Forks will not discriminate against qualified individuals with disabilities on the basis of disability in the City's services, programs, or activities.

Employment: The City does not discriminate on the basis of disability in its hiring or employment practices and complies with all regulations promulgated by the U.S. Equal Employment Opportunity Commission under the Title I of the Americans with Disabilities Act (ADA).

Effective Communication: The City will generally, upon request, provide appropriate aids and services leading to effective communication for qualified persons with disabilities so they can participate equally in the City's programs, services, and activities, including qualified sign language interpreters, documents in Braille, and other ways of making information and communications accessible to people who have speech, hearing or vision impairments.

Modifications to Policies and Procedures: The City will make all reasonable modifications to policies and programs to ensure that people with disabilities have an equal opportunity to enjoy all City programs, services, and activities. For example, individuals with service animals are welcomed in City offices, even where pets are generally prohibited.

Anyone who requires an auxiliary aid or service for effective communication, or a modification of policies or procedures to participate in a City program, service, or activity, should contact ADA Coordinator Nancy Ellis at (218) 773- 2208 or e-mail: nellis@egf.mn as soon as possible but no later than five (5) days before the scheduled event.

The ADA does not require the City of East Grand Forks to take any action that would fundamentally alter the nature of its programs or services, or impose an undue financial or administrative burden.

Complaints that a City program, service, or activity is not accessible to persons with disabilities should be directed to:

Nancy Ellis, ADA Coordinator
City of East Grand Forks
600 DeMers Ave.
East Grand Forks, MN 56721
Telephone: (218) 773-2208/ Fax (218) 773-2507
E-mail: nellis@egf.mn

The City will not place a surcharge on a particular individual with a disability or any group of individuals with disabilities to cover the cost of providing auxiliary aids/services or reasonable modifications of policy, such as retrieving items from locations that are open to the public but are not accessible to persons who use wheelchairs.

SECTION V- APPENDICES

APPENDIX H

NOTIFICATION & PRINTED INFORMATION STATEMENT

PRINTED INFORMATION STATEMENT FOR TITLE II ENTITIES UNDER THE ADA

NOTIFICATION

"In accordance with the Americans with Disabilities Act and Minnesota Law, it is the policy of the City of East Grand Forks to offer its public programs, services and meetings in a manner that is readily accessible to everyone, including individuals with disabilities.

If you are a person with a disability and need an accommodation, please contact the ADA Coordinator, Nancy Ellis at (218) 773-2208, E-Mail: nellis@egf.mn, Fax: (218) 773-2507, or Minnesota Relay Network: 711, **at least five (5) days in advance."**

STATEMENT

In order to meet the ADA Title II communication standards, City departments must be able to provide information in alternative formats such as using easy-to-understand language, Braille, large-print format, audiotape, or computer disk, etc.

Include the following notice on all materials printed by the City that are made available to the public:

"This publication can be made available upon request in alternative formats such as Braille, large print, audiotape, or computer disk. Requests can be made by calling (218) 773-2208 (Voice) or 711 for the Minnesota Relay Service or e-mailing the ADA Coordinator, at nellis@egf.mn. Please allow five (5) days for your request to be processed."

SECTION V- APPENDICES

APPENDIX I

ACCOMMODATION REQUEST FORM

HUMAN RESOURCES DEPARTMENT

The City of East Grand Forks does not discriminate on the basis of disability in admission to, or operation of its programs, services, activities or facilities. This form may be used by individuals and their companions with a disability seeking access to City programs, services, activities or facilities.

ACCOMMODATION REQUEST INFORMATION

Name: _____ **Telephone (or TTY):** _____

Address: _____ **Date:** _____

The program or facility to which I am requesting access is located at:

_____

I am requesting the following accommodation(s):

- ☐ **Wheelchair Access**
- ☐ **Sign Language Interpretation**
- ☐ **Written Material in Alternate Format (Large Print/Computer Disc)**
- ☐ **Written Material in Braille**
- ☐ **Reader**
- ☐ **Modification of Policy Procedures**
- ☐ **Other**

Please provide any other details or information necessary to process this request:

_____

_____

PLEASE RETURN THIS FORM TO:

Department: _____ **Telephone:** _____

Address: _____ **TTY (If Available):** _____

ADDITIONAL QUESTIONS MAY BE DIRECTED TO THE DIVISION OF COMMUNITY AFFAIRS OR LABOR RELATIONS:

City of 9I·ăǘ DNI·yŘ C2NƖă
Human Resources Department
слл 5Ŝ a ŜNă !ØŜφ
9I·ăǘ DNI·yŘ C2NƖăΣ a b рстнм
OFFICE: (218) 773-2483
FAX: (218) 773-9728

SECTION V- APPENDICES

APPENDIX J

ADA COORDINATOR DUTIES AND RESPONSIBILITIES FROM DOJ

The ADA Coordinator duties require the attention of a well trained and experienced professional who can effectively handle a variety of responsibilities

Coordinates and is responsible to assure compliance with the Americans with Disabilities (ADA) Act, Sections 503 and 504 of the Rehabilitation Act of 1973, and other federal and state laws and regulations pertaining to persons with disabilities.

Responsible for coordinating policies and procedures relating to persons with disabilities, tracking city progress relating to its policies and procedures as well as state and federal laws relating to persons with disabilities.

Compliance Process Responsibilities:

Ensures that processes are in place to provide for the prompt and equitable resolution of complaints and inquiries from city employees, as well as the public regarding compliance with the ADA and other applicable federal and state laws regarding discrimination on the basis of disability.

Informational Responsibilities:

Maintain, Keep and update current information regarding state and federal laws and regulations as well as the best practices concerning the rights of persons with disabilities and ways of providing reasonable accommodations to persons with disabilities while maintaining program performance standards.

Maintain, Keep and update current information regarding state and federal laws and regulations as well as the best practices for city's employment policies and procedures.

Ensures that city-related information is readily available on services, accommodations, policies, and demographics relating to persons with disabilities.

Outreach Responsibilities:

Assist and provides ADA program information and facility interpretation and advice on compliance to all city departments and the community.

Assist with development and maintains written materials and other informational pieces to broadly disseminate information regarding the ADA and the City's policies relating to persons with disabilities.

Assist and participates in the development of presentations on the provision of equal opportunity for persons with disabilities.

Act as the primary liaison with relevant state and federal agencies, as well as other ADA coordinators.

Reporting Responsibilities:

Ensure that a record of all disability and accommodation issues and the resolution of each have been established.

Polk County Highway Department ADA Transition Plan

Introduction

This document has been created to specifically cover accessibility within the public right of way and does not include information on County programs, practices, or building facilities not related to public rights of way.

Transition Plan Need and Purpose

The Americans with Disabilities Act (ADA), enacted on July 26, 1990, is a civil rights law prohibiting discrimination against individuals on the basis of disability. ADA consists of five titles outlining protections in the following areas:

1. Employment
2. State and local government services
3. Public accommodations
4. Telecommunications
5. Miscellaneous Provisions

Title II of ADA pertains to the programs, activities and services public entities provide. As a provider of public transportation services and programs, Polk County Highway Department must comply with this section of the Act as it specifically applies to public service agencies. Title II of ADA provides that, "...no qualified individual with a disability shall, by reason of such disability, be excluded from participation in or be denied the benefits of the services, programs, or activities of a public entity, or be subjected to discrimination by any such entity." (42 USC. Sec.12132: 28 CFR.Sec.35.130).

As required by Title II of ADA, 28 CFR, Part 35 Sec.35.105 and Sec.35.150, Polk County Highway Department has conducted a self-evaluation of its facilities within public rights of way and has developed this Transition Plan detailing how the organization will ensure that all of those facilities are accessible to all individuals.

ADA and its Relationship to Other Laws

Title II of ADA is companion legislation to two previous federal statutes and regulations: The Architectural Barriers Acts of 1968 and Section 504 of the Rehabilitation Act of 1973.

The Architectural Barriers Act of 1968 is a Federal law that requires facilities designed, built, altered or leased with Federal funds to be accessible. The Architectural Barriers Act marks one of the first efforts to ensure access to the built environment.

Section 504 of the Rehabilitation Act of 1973 is a Federal law that protects qualified individuals from discrimination based on their disability. The nondiscrimination requirements of the law apply to employers and organizations that receive financial assistance from any Federal department or agency. Title II of ADA extended this coverage to all state and local government entities, regardless of whether they receive federal funding or not.

Agency Requirements

Under Title II, Polk County Highway Department must meet these general requirements:

- Must operate their programs so that, when viewed in their entirety, the programs are accessible to and useable by individuals with disabilities (28 C.F.R.Sec.35.150).
- May not refuse to allow a person with a disability to participation in a service, program or activity simply because the person has a disability (28 C.F.R.Sec.35.130 (a).
- Must make reasonable modifications in policies, practices and procedures that deny equal access to individuals with disabilities unless a fundamental alteration in the program would result (28 C.F.R.Sec.35.130(b)(7).
- May not provide services or benefits to individuals with disabilities through programs that are separate or different unless the separate or different measures are necessary to ensure that benefits and services are equally effective (28 C.F.R.Sec.35.130(b)(iv)&(d).
- Must take appropriate steps to ensure that communications with applicants, participants and members of the public with disabilities are as effective as communications with others (29 C.F.R.Sec.35.160(a).
- Must designate at least one responsible employee to coordinate ADA compliance (28 C.F.R.Sec.35.107(a). This person is often referred to as the "ADA Coordinator". The public entity must provide the ADA coordinator's name, office address, and telephone number to all interested individuals (28 C.F.R.Sec.35.107(a).
- Must provide notice of ADA requirements. All public entities, regardless of size, must provide information about the rights and protections of Title II to applicants, participants, beneficiaries, employees, and other interested persons (28 C.F.R.Sec.35.106). The notice must include their identification of the employee serving as the ADA coordinator and must provide this information on an ongoing basis (28 C.F.R.Sec.35 104.8(a).
- Must establish a grievance procedure. Public entities must adopt and publish grievance procedures providing for prompt and equitable resolution of complaints (28 C.F.R.Sec.35.107.130(b). This requirement provides for a timely resolution of all problems or conflicts related to ADA compliance before they escalate to litigation and/or the federal complaint process.

Self-Evaluation

Overview

The Polk County Highway Department is required, under Title II of the Americans with Disabilities Act (ADA) and 28 C.F.R.35.105, to perform a self-evaluation of its current transportation infrastructure policies, practices, and programs. This self-evaluation will identify what policies and practices impact accessibility and examines how the County implements these policies. The goal of the self-evaluation is to verify that, in implementing the County's policies and practices, the department is providing accessibility and not adversely affecting the full participation of individuals with disabilities.

The self-evaluation also examines the condition of the County's Pedestrian Circulation Route/Pedestrian Access Route (PCR/PAR) and identifies potential need for PCR/PAR infrastructure improvements. This will include the sidewalks, curb ramps, bicycle/pedestrian trails, traffic control signals and transit facilities that are located within the County rights of way. Any barriers to accessibility identified in the self-evaluation and the remedy to the identified barriers are set out in this transition plan.

Summary

In April of 2015, the Polk County Highway Department conducted an inventory of pedestrian facilities within its public right of way consisting of the evaluation of the following facilities:

- 55,425 Ln Ft (10.5 miles) of sidewalks
- 267 curb ramps
- 1 traffic control signal
- 0 bus stops
- 0 miles of trails

A detailed evaluation on how these facilities relate to ADA standards is found in Appendix A and will be updated periodically.

Practices and Procedures

Previous Practices

Since the adoption of the ADA, Polk County Highway Department has striven to provide accessible pedestrian features as part of the County's capital improvement projects. As additional information was made available as to the methods of providing accessible pedestrian features, the County updated their procedures to accommodate these methods.

Procedures

Polk County Highway Department's goal is to continue to provide accessible pedestrian design features as part of the County capital improvement projects. The County has established ADA design standards and procedures as listed in Appendix F. These standards and procedures will be kept up to date with nationwide and local best management practices.

The County will consider and respond to all accessibility improvement requests. All accessibility improvements that have been deemed reasonable will be scheduled consistent with transportation priorities. The County will coordinate with external agencies to ensure that all new or altered pedestrian facilities within the County jurisdiction are ADA compliant to the maximum extent feasible.

Maintenance of pedestrian facilities within the public right of way will continue to follow the general maintenance procedures set by the County Highway Department. Maintenance projects are prioritized based on benefit, cost and budget available.

Requests for accessibility improvements can be submitted to the County Engineer. Contact information for County Engineer is located in Appendix E.

Improvement Schedule

Priority Areas

Polk County Highway Department has identified general locations as priority areas for accessibility improvement projects. These areas have been selected due to their urban setting and proximity to public areas such as schools, government offices and medical facilities. The priority areas as identified are as follows:

- Within the urban boundaries of the cities of Trail, Gully, Lengby, Fosston, McIntosh, Winger, Erskine, Mentor, Fertile, Nielsville, Climax, Fisher, Gentilly, and Crookston.

Further priority will be given to any location where an improvement project or alteration was constructed after January 26, 1991, and accessibility features were omitted.

External Agency Coordination

Many other agencies are responsible for pedestrian facilities within Polk County. The County will coordinate with those agencies and encourage the elimination of accessibility barriers along their routes.

ADA Coordinator

In accordance with 28 C.F.R.35.107(a), Polk County has identified an ADA Title II Coordinator to oversee the County policies and procedures. Contact information for this individual is located in Appendix E.

Implementation Schedule

Methodology

Polk County Highway Department will utilize two methods for upgrading pedestrian facilities to the current ADA standards. The first and most comprehensive method is a scheduled street and utility improvement project. All pedestrian facilities impacted by these projects will be upgraded to current ADA accessibility standards. The second method is the stand alone sidewalk and ADA accessibility improvement project. This type of project will be incorporated into the Capital Improvement Program (CIP) or Maintenance Program on a case by case basis as determined by the Polk County Highway Engineer. The County CIP and Maintenance Program, listing specific improvement projects, are available at the Polk County Highway Department.

Public Input

Polk County Highway Department recognizes that public input is important to help define propriety areas for improvements. The County will consider and respond to all accessibility improvement requests. All accessibility improvements that have been deemed reasonable will be scheduled consistent with transportation priorities. Requests for accessibility improvements can be submitted to the County Engineer.

Grievance Procedure

If users of Polk County facilities and services believe the County has not provided reasonable accommodation, they have the right to file a grievance. In accordance with 28 C.F.R.35.107(b), the County has a grievance procedure for the purpose of the prompt and equitable resolution of citizens' complaints, concerns, comments, and other grievances. Contact the County ADA Title II Coordinator for information on the grievance procedure. Contact information is located in Appendix E.

Monitor the Progress

This document will continue to be updated as conditions within the County evolve. The appendices in this document will be updated periodically, while the main body of the document will only be updated when major revisions are required.

Appendices

A. Self-Evaluation Results

B. Budget Information

C. Schedule

D. Grievance Procedure

E. Contact Information

F. Agency ADA Design Standards and Procedures

G. Glossary of Terms

Appendix A-Self Evaluation Results

The majority of self-evaluated results have been obtained from field inspection reviews as needed.

The evaluation of pedestrian facilities in 2015 yielded the following results:

- 80% of sidewalks met accessibility criteria
- 90% of intersections (with sidewalks) had curb ramps
- 40% of curb ramps met accessibility criteria
- 1 traffic signals with pedestrian facilities
- 0 trails
- 0 bus stops

The majority of the sidewalks were in good shape with ample accessibility. Cross slopes and joint conditions were not inspected in detail. Walks will be looked at in detail prior to any major scheduled street and utility improvement projects.

Curb ramps have been recently updated and meet accessibility criteria in McIntosh, Lengby, Gully, Fosston and Crookston. Most other existing curb ramps were constructed to older design standards. There are also approximately 20 intersections lacking curb ramps. These curb ramps will need to be brought into compliance to these new standards. They will be addressed in conjunction with street and utility improvement projects or standalone sidewalk and ADA accessibility improvement projects depending on schedules and budgets.

Polk County shares responsibilities for one intersection with traffic signals in Crookston at TH 2. MnDOT handles the operation and maintenance of these traffic signals.

The county does not own any trails within the stated urban limits.

There are no designated bus stops along county roads.

The following summary sheet and maps show locations of Curb Ramps within Polk County.
Locations in **blue** are compliant ramps and the **red** are non-compliant.

Location City/Route	*ADA Ramps Required*	*Number Compliant* Yes	No	*Lin Ft of Sidewalk*	*Percent Sidewalk Compliant*	*Years Updated*	*Comments*
Trail/CR101	7	0	7	351	0		
Gully/CSAH 2	15	11	4	2976	100	2005	
Lengby/CSAH 4, CR 210, CSAH 25, CR 102	14	10	4	2992	90	2009	
Fosston/CSAH 1, CSAH 6, CR 103	50	19	31	7770	90	2014	
McIntosh/CSAH 8, CR 104, CR 114, CSAH 41	56	37	19	9427	90	2007 2013	
Winger/CSAH 1, CR 107	16	16	0	3815	50	1985	
Erskine/CSAH 34, CR 105	22	3	19	7659	50	1993	
Mentor/CR 106	7	0	7	806	50		
Fertile/CR 108, CSAH 1	24	0	24	5471	75	1996	
Nielsville/CSAH1, CR109	10	1	9	1967	90	2004	
Climax/CR110	1	0	1	720	75		
Fisher/CSAH 15, CR 111, CSAH 61	17	0	17	3849	80		
Gentilly/CSAH 11	2	0	2	2247	95	1982	
Crookston/CSAH 9, CSAH 11, CSAH 61, CSAH 71	26	10	16	5375	95	1997	
Totals	**267**	**107**	**160**	**55,425**			

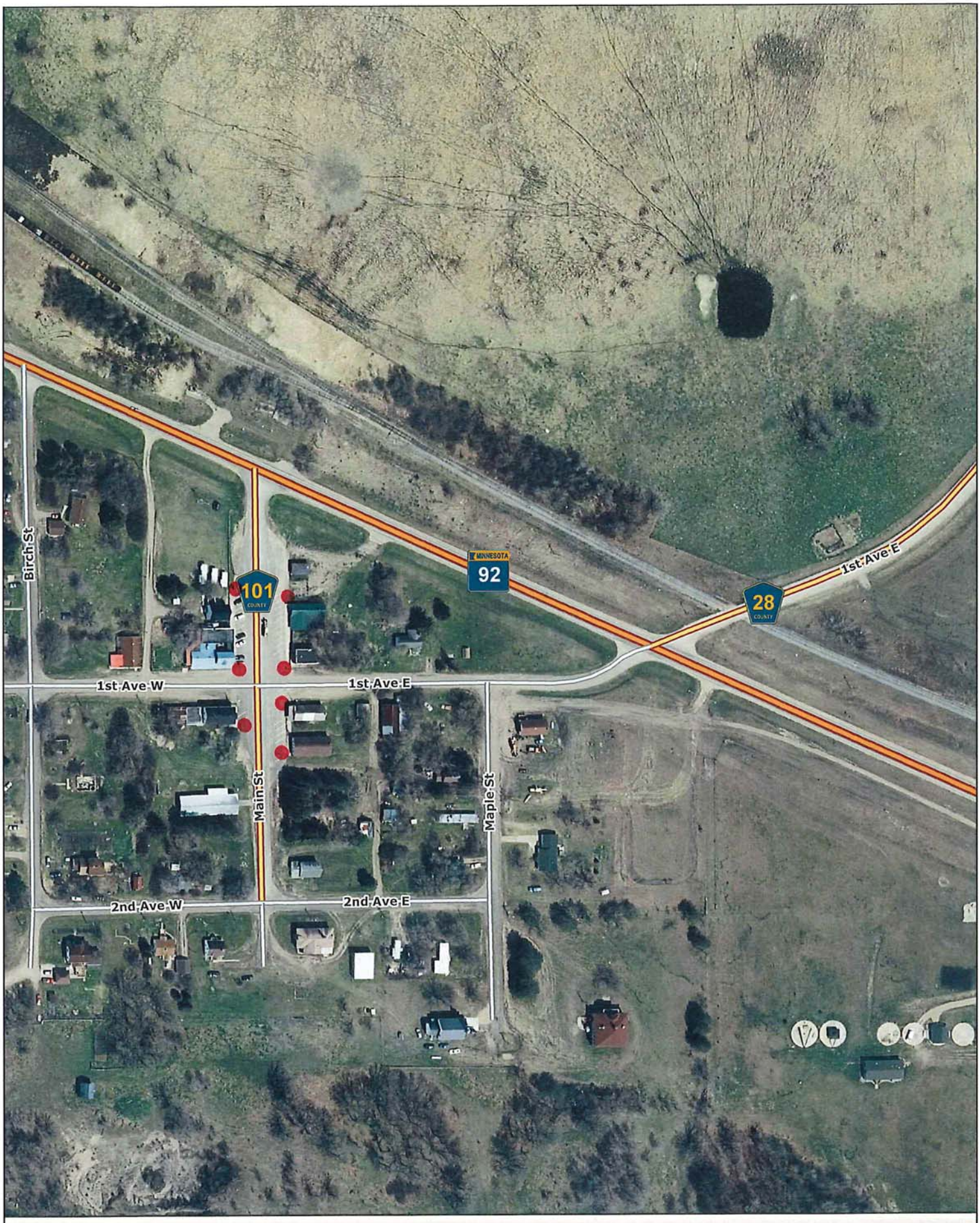

Polk County GIS

N

Curb Ramps | Trail

These data are provided on an "AS-IS" basis, without warranty of any type, expressed or implied, including but not limited to any warranty as to their performance, merchantability, or fitness for any particular purpose.

2/5/2015

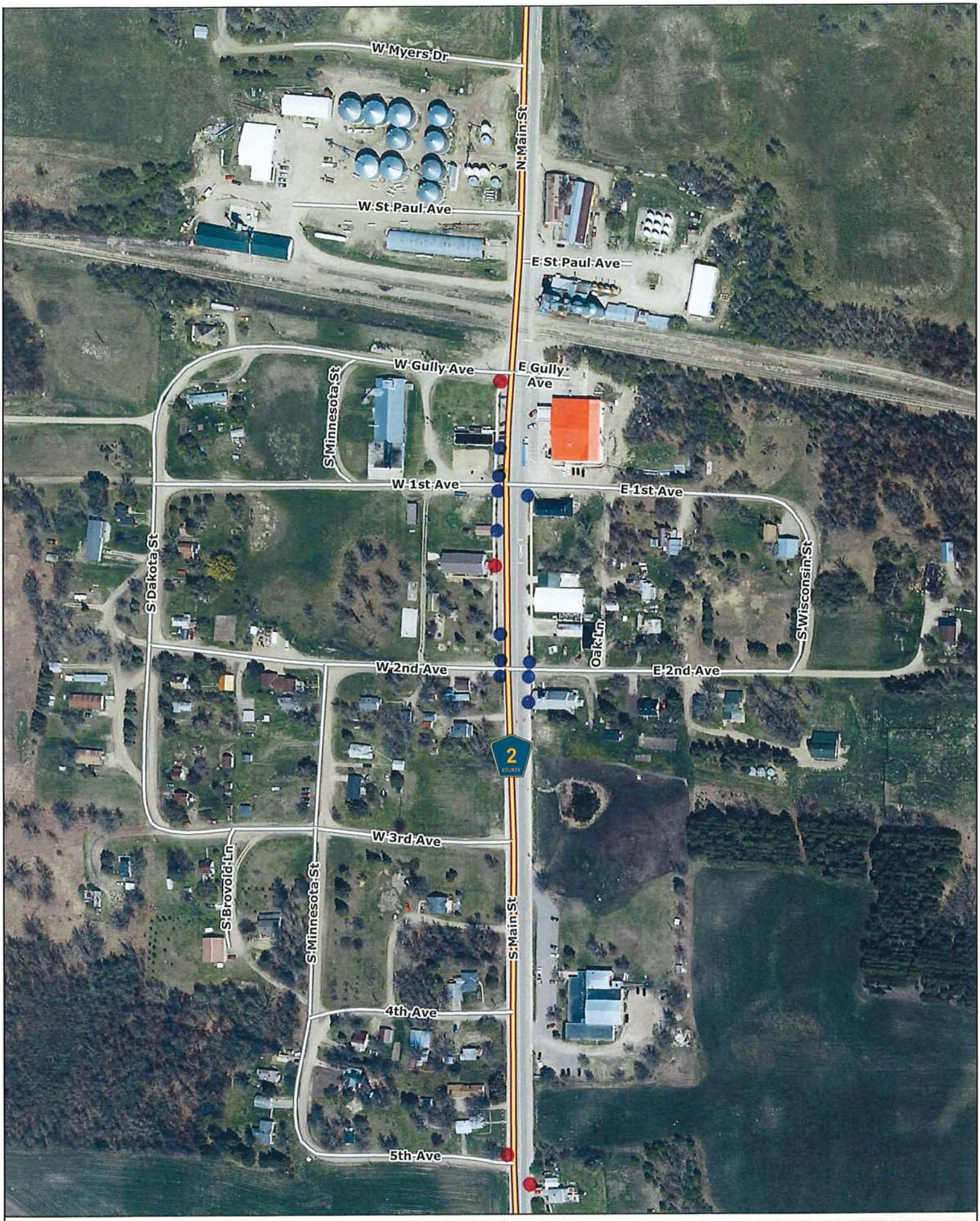

Polk County GIS

N

Curb Ramps | Gully

These data are provided on an "AS-IS" basis, without warranty of any type, expressed or implied, including but not limited to any warranty as to their performance, merchantability, or fitness for any particular purpose.

2/5/2015

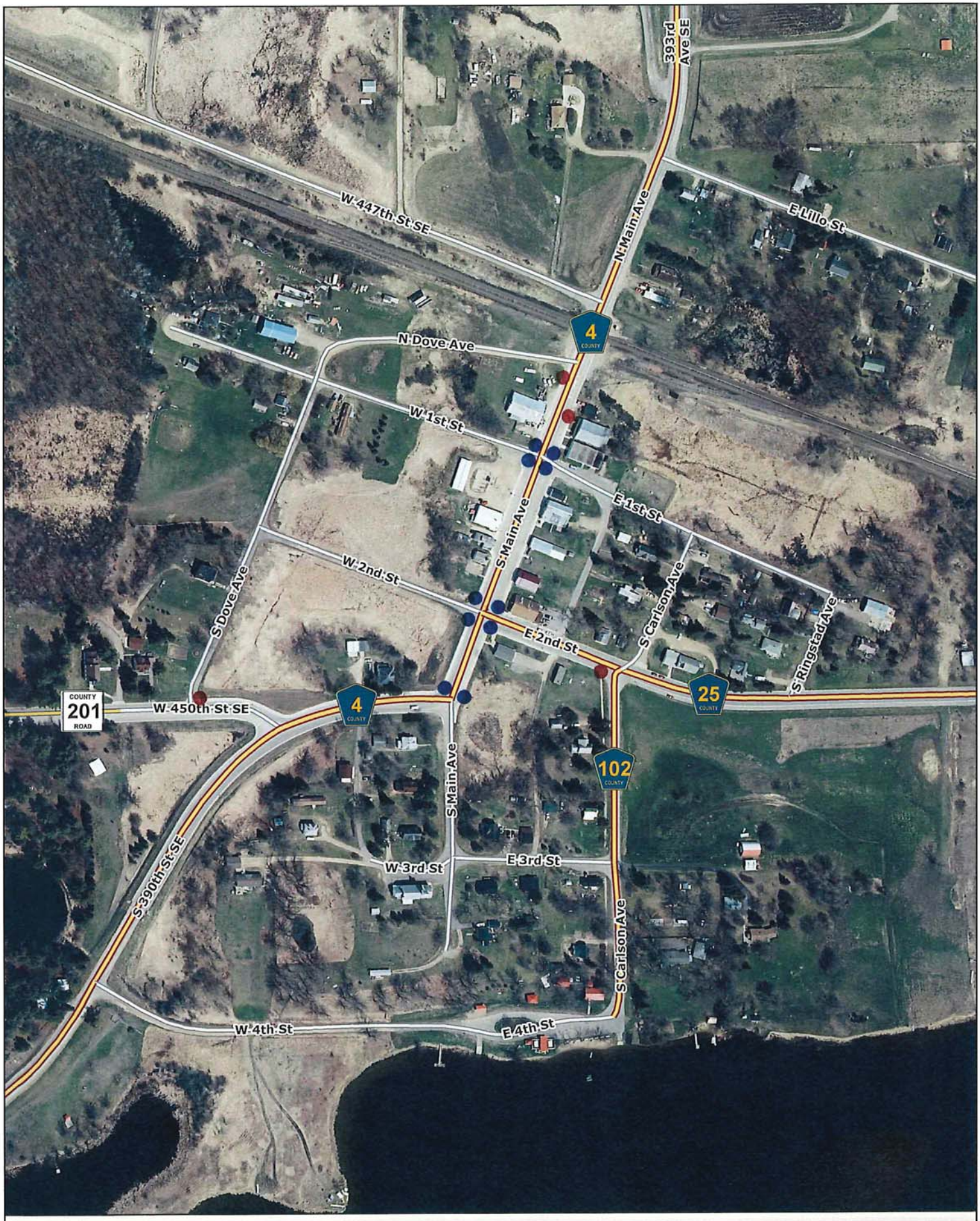

Polk County GIS

N

Curb Ramps | Lengby

These data are provided on an "AS-IS" basis, without warranty of any type, expressed or implied, including but not limited to any warranty as to their performance, merchantability, or fitness for any particular purpose.

2/5/2015

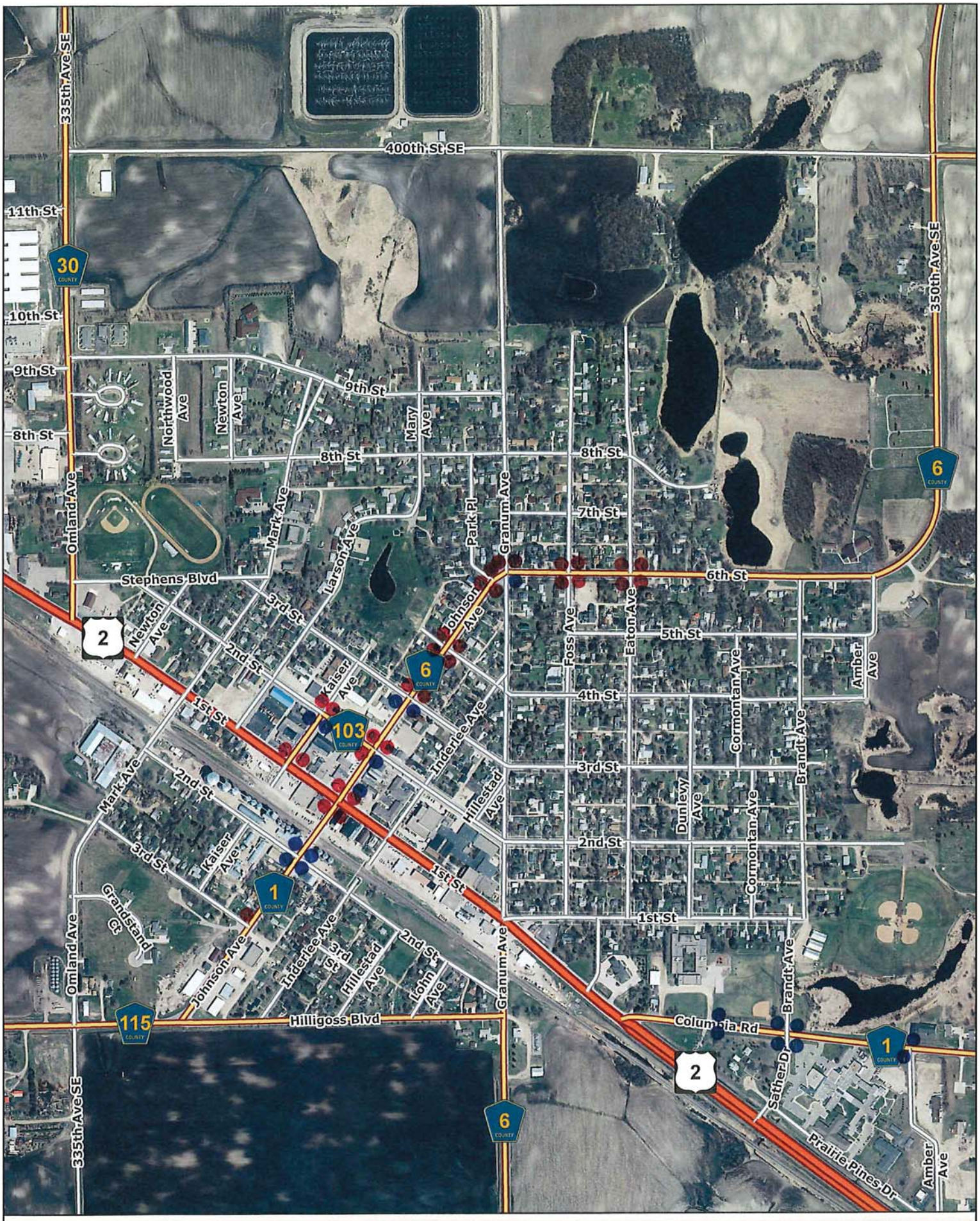

Polk County GIS

N

Curb Ramps | Fosston

These data are provided on an "AS-IS" basis, without warranty of any type, expressed or implied, including but not limited to any warranty as to their performance, merchantability, or fitness for any particular purpose.

2/5/2015

Polk County GIS

N

Curb Ramps | McIntosh

These data are provided on an "AS-IS" basis, without warranty of any type, expressed or implied, including but not limited to any warranty as to their performance, merchantability, or fitness for any particular purpose.

2/5/2015

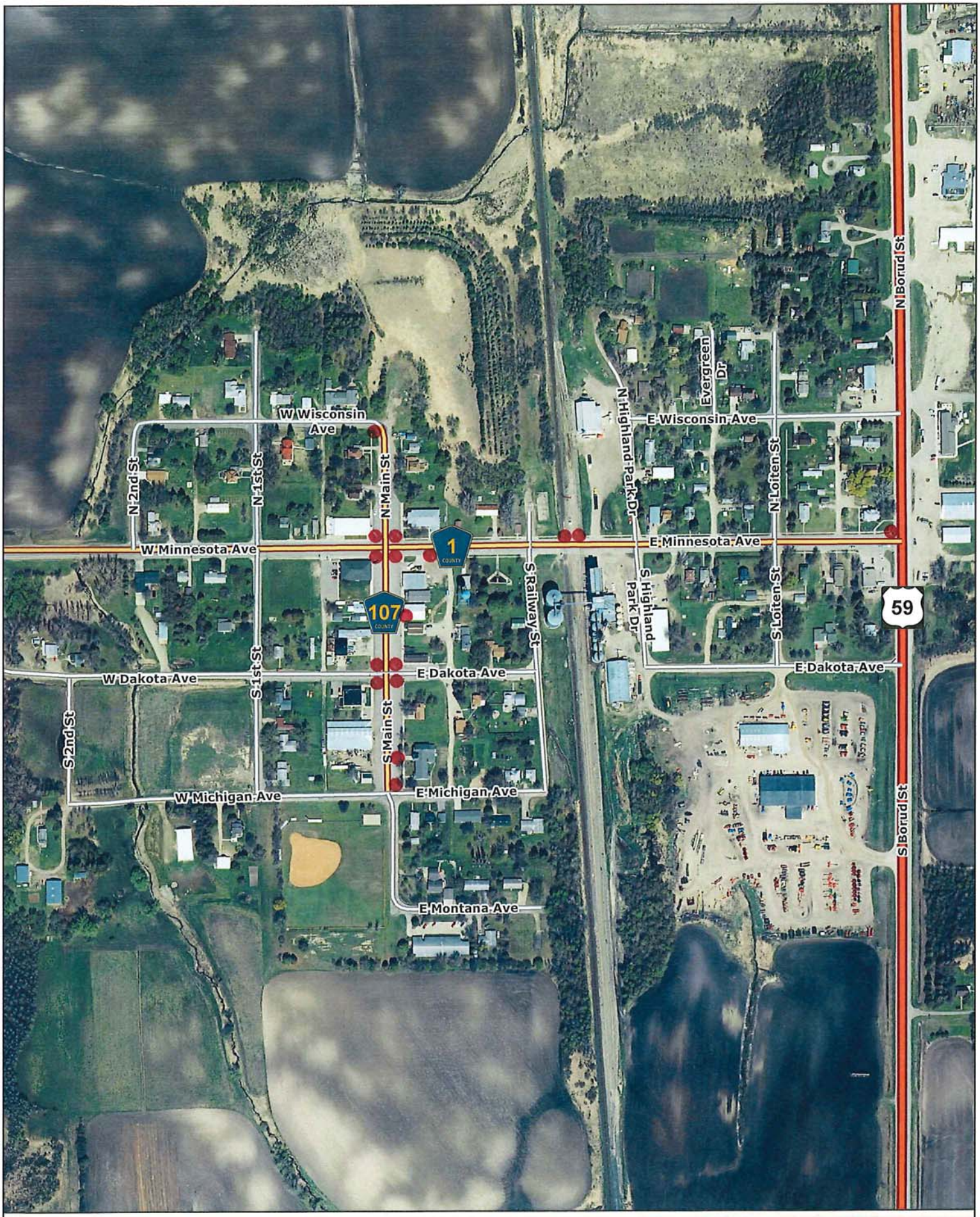

Polk County GIS

N

Curb Ramps | Winger

These data are provided on an "AS-IS" basis, without warranty of any type, expressed or implied, including but not limited to any warranty as to their performance, merchantability, or fitness for any particular purpose.

2/5/2015

Polk County GIS

N

Curb Ramps | Erskine

These data are provided on an "AS-IS" basis, without warranty of any type, expressed or implied, including but not limited to any warranty as to their performance, merchantability, or fitness for any particular purpose.

2/5/2015

Polk County GIS

N

Curb Ramps | Mentor

These data are provided on an "AS-IS" basis, without warranty of any type, expressed or implied, including but not limited to any warranty as to their performance, merchantability, or fitness for any particular purpose.

2/5/2015

Polk County GIS

N

Curb Ramps | Fertile

These data are provided on an "AS-IS" basis, without warranty of any type, expressed or implied, including but not limited to any warranty as to their performance, merchantability or fitness for any particular purpose.

2/5/2015

Polk County GIS

N

Curb Ramps | Nielsville

These data are provided on an "AS-IS" basis, without warranty of any type, expressed or implied, including but not limited to any warranty as to their performance, merchantability, or fitness for any particular purpose.

2/5/2015

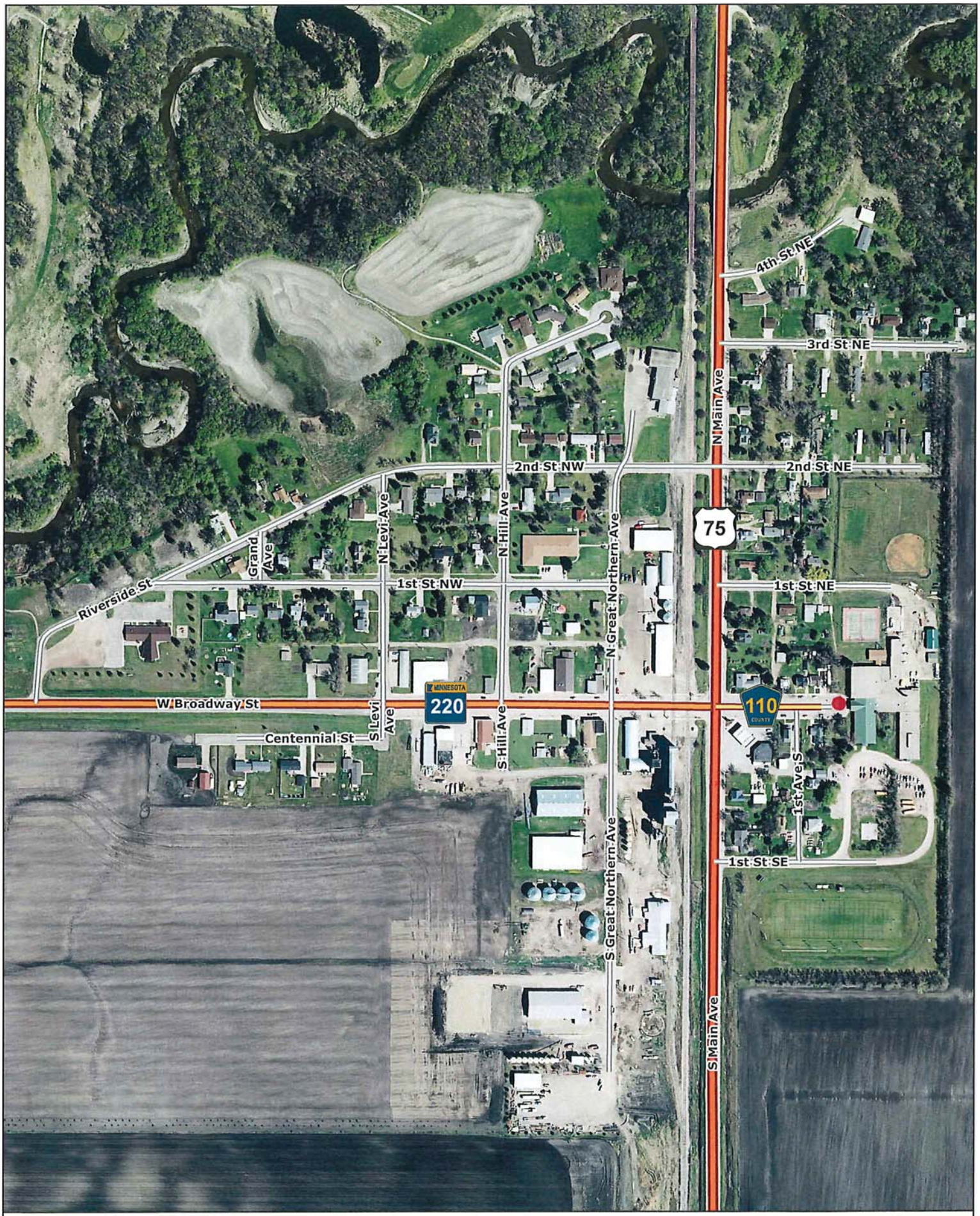

Polk County GIS

N

Curb Ramps | Climax

These data are provided on an "AS-IS" basis, without warranty of any type, expressed or implied, including but not limited to any warranty as to their performance, merchantability, or fitness for any particular purpose.

2/5/2015

Polk County GIS

N

Curb Ramps | Fisher

These data are provided on an "AS-IS" basis, without warranty of any type, expressed or implied, including but not limited to any warranty as to their performance, merchantability, or fitness for any particular purpose.

2/5/2015

Polk County GIS

N

Curb Ramps | Gentilly

These data are provided on an "AS-IS" basis, without warranty of any type, expressed or implied, including but not limited to any warranty as to their performance, merchantability, or fitness for any particular purpose.

2/5/2015

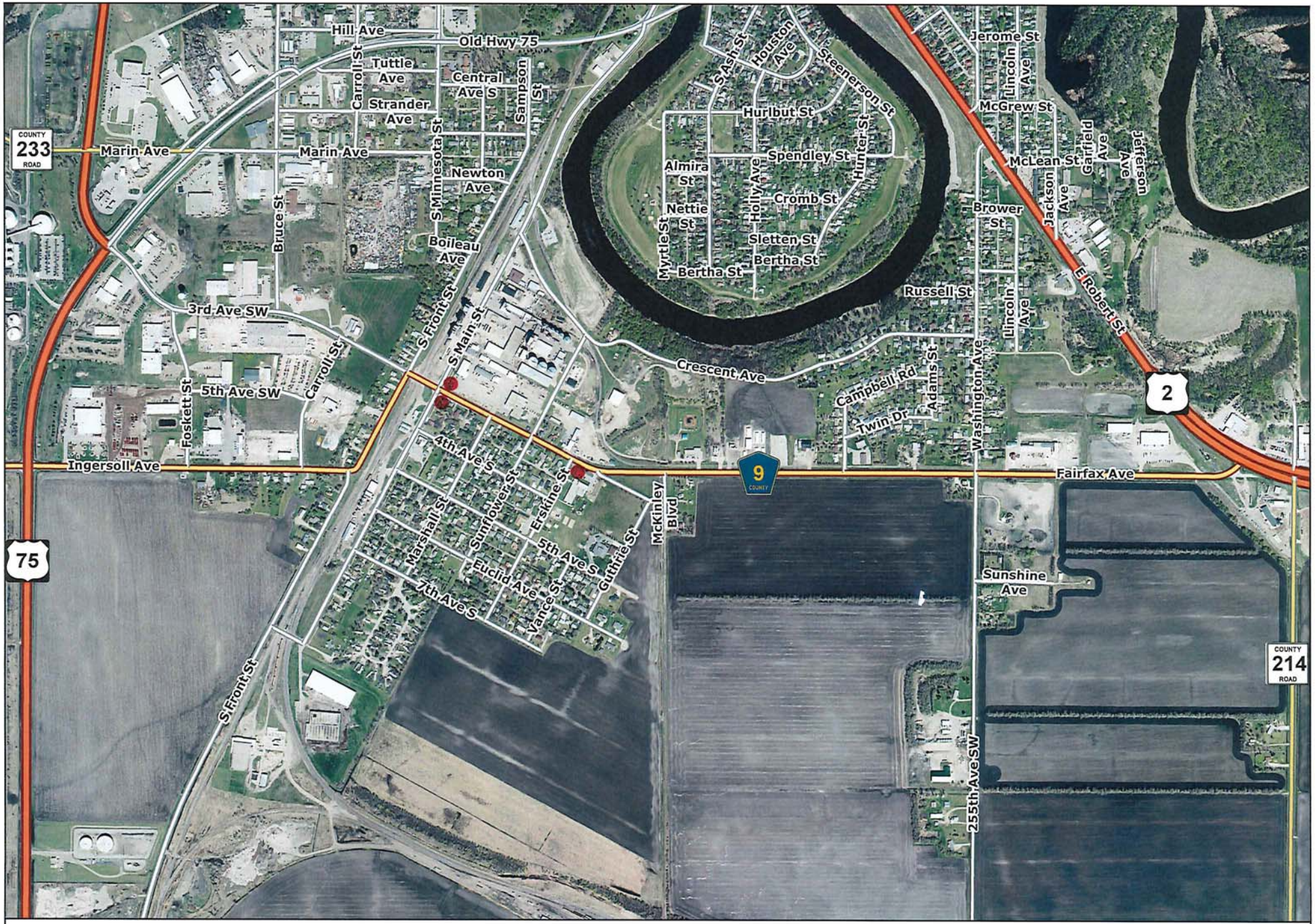

Polk County GIS

N

Curb Ramps | South Crookston

These data are provided on an "AS-IS" basis, without warranty of any type, expressed or implied, including but not limited to any warranty as to their performance, merchantability, or fitness for any particular purpose.

2/6/2015

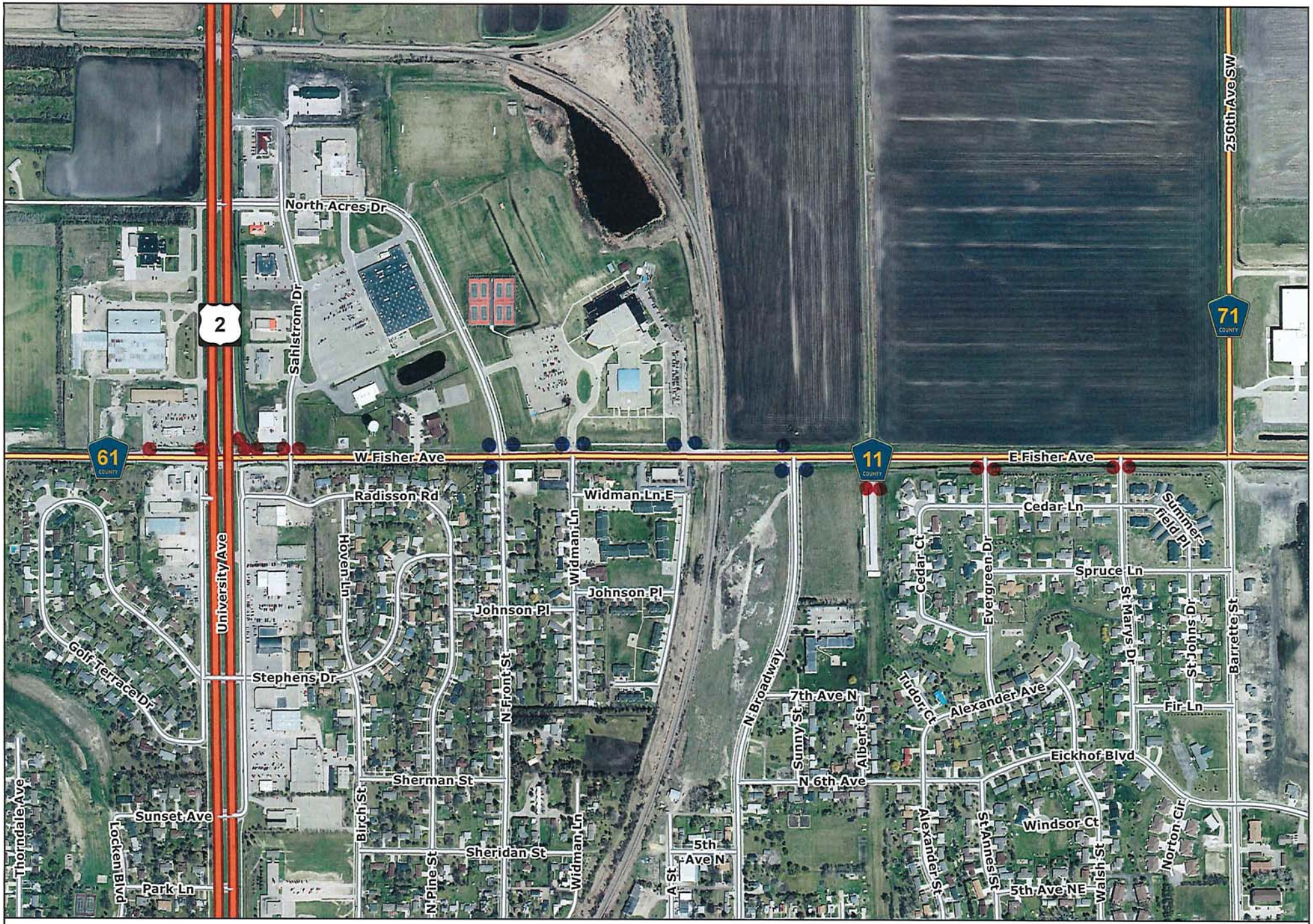

Polk County GIS

N

Curb Ramps | North Crookston

These data are provided on an "AS-IS" basis, without warranty of any type, expressed or implied, including but not limited to any warranty as to their performance, merchantability, or fitness for any particular purpose.

2/6/2015

Appendix B-Self Evaluation Results

Cost Information

Unit Prices

Construction costs for upgrading facilities can vary depending on each individual improvement and conditions of each site. Costs can also vary on the type and size of projects the improvements are associated with. Listed below are representative 2011 costs for some typical accessibility improvements based on if the improvements are included as part of a retrofit type project, or as part of a larger comprehensive capital improvement project.

Intersection corner ADA improvement retrofit: +/-$4,000 per corner.

Intersection corner ADA improvement as part of adjacent capital project: +/- $1,500 per corner

Traffic control signal APS upgrade retrofit: +/- $1,500

Traffic control signal APS upgrade as part of full traffic control signal installation: +/- $10,000.

Sidewalk/Trail ADA improvement retrofit: +/- $7.00 per SF

Sidewalk/Trail ADA improvement as part of adjacent capital project: +/- $4.50 per SF

Bus stop ADA improvement retrofit: +/- $400 per stop

Bus stop ADA improvement as part of adjacent capital project: +/- $250 per stop

Priority Areas

Based on the results of the self-evaluation, the estimate costs associated with updating and improving ADA accessibility is $300,000 ($250,000 for ADA Ramps, $50,000 sidewalk replacement).

This amount signifies a significant investment that Polk County Highway Department is committed to making in the upcoming years. A systematic approach will be taken in order to absorb the cost into the Polk County Highway Department budget for improvements to the public right of way.

Appendix C-Schedule

See current Capital Improvement Program for specific project information, which is available at the Polk County Highway Department.

Appendix D-Grievance Procedure

Contact the County ADA title II coordinator for information on the grievance procedure.

Appendix E-Contact Information

ADA Title II Coordinator:

Name: Kirsten Fagerlund
Address: Polk County Public Health
721 S. MN St.
PO Box 403
Crookston, MN 56716
218-218-3385
E-mail: kirsten.fagerlund@co.polk.mn.us

County Engineer:

Name: Rich Sanders
Address: Polk County Highway Department
820 Old Highway 75 S.
Crookston, MN 56716
218-281-3952
E-mail: rsanders@co.polk.mn.us

Appendix F-Agency ADA Design Standards and Procedures

Design Procedures

Intersection Corners

Curb ramps or blended transitions will attempt to be constructed or upgraded to achieve compliance within all capital improvement projects. There may be limitations which make it technically infeasible for an intersection corner to achieve full accessibility within the scope of any project. Those limitations will be noted and those intersection corners will remain on the transition plan. As future projects or opportunities arise, those intersection corners shall continue to be incorporated into future work. Regardless on if full compliance can be achieved or not, each intersection corner shall be made as compliant as possible in accordance with the judgment of County staff.

Sidewalks/Trails

Sidewalks and trails will attempt to be constructed or upgraded to achieve compliance within all capital improvement projects. There may be limitations which make it technically infeasible for segments of sidewalks or trails to achieve full accessibility within the scope of any project. Those limitations will be noted and those segments will remain on the transition plan. As future projects or opportunities arise, those segments shall continue to be incorporated into furfure work. Regardless if full compliance can be achieved or not, every sidewalk or trail shall be made as compliant as possible in accordance with the judgment of County staff.

Traffic Control Signals

Traffic control signals will attempt to be constructed or upgraded to achieve compliance within all capital improvement projects. There may be limitations which make it technically infeasible for individual traffic control signal locations to achieve full accessibility within the scope of any project. Those limitations will be noted and those locations will remain on the transition plan. As future project or opportunities arise, those locations shall continue to be incorporated into future work. Regardless if full compliance can be achieved or not, each traffic signal control location shall be made as compliant as possible in accordance with the judgment of County staff.

Bus Stops

Bus stops will attempt to be constructed or upgraded to achieve compliance within all capital improvement projects. There may be limitations which make it technically infeasible for individual bus stop locations to achieve full accessibility within the scope of any project. Those limitations will be noted and those locations will remain on the transition plan. As future projects or opportunities arise, those locations shall continue to be incorporated into future work. Regardless if full compliance can be achieved or not, each bus stop location shall be made as compliant as possible in accordance with the judgment of County staff.

Other Transit Facilities

Polk County Highway Department will work with transit providers to encourage that those facilities meet all appropriated accessibility standards.

Other policies practice and programs

Policies, practices and programs not identified in this document will follow the applicable ADA standards.

Design Standards

Polk County Highway Department utilizes PROWAG, as adopted by the Minnesota Department of Transportation (MnDOT), as its design standard. A copy of this document is included in the following pages of this appendix.

Appendix G-Glossary of Terms

ABA: See Architectural Barriers Act.

ADA: See Americans with Disabilities Act.

ADA Transition Plan: Mn/DOT's transportation system plan that identifies accessibility needs, the process to fully integrate accessibility improvements into the Statewide Transportation Improvement Program (STIP), and ensures all transportation facilities, services, programs, and activities are accessible to all individuals.

ADAAG: See Americans with Disabilities Act Accessibility Guidelines.

Accessible: A facility that provides access to people with disabilities using the design requirements of the ADA.

Accessible Pedestrian Signal (APS): A device that communicates information about the WALK phase in audible and vibrotactile formats.

Alteration: A change to a facility in the public right-of-way that affects or could affect access, circulation, or use. An alteration must not decrease or have the effect of decreasing the accessibility of a facility or an accessible connection to adjacent building or site.

Americans with Disabilities Act (ADA): The Americans with Disabilities Act; Civil rights legislation passed in 1990 and effective July 1992. The ADA sets design guidelines for accessibility to public facilities, including sidewalks and trails, by individuals with disabilities under the Americans with Disabilities Act (ADA) of 1990.

Americans with Disabilities Act Accessibility Guidelines (ADAAG): contains scoping and technical requirements for accessibility to buildings and public facilities by individuals with disabilities under the Americans with Disabilities Act (ADA) of 1990.

APS: See Accessible Pedestrian Signal.

Architectural Barriers Act (ABA): Federal law that requires facilities designed, built, altered or leased with Federal funds to be accessible. The Architectural Barriers Act marks one of the first efforts to ensure access to the built environment.

Capital Improvement Program (CIP): The CIP for the Transportation Department includes an annual capital budget and a five-year plan for funding the new construction and reconstruction projects on the County's transportation system.

Detectable Warning: A surface feature of truncated domes built in or applied to the walking surface to indicate an upcoming change from pedestrian to vehicular way.

DOJ: See United States Department of Justice

Federal Highway Administration (FHWA): A branch of the US Department of Transportation that administers the Federal-Aid Highway Program, providing financial assistance to states to construct and improve highways, urban and rural roads, and bridges.

FHWA: See Federal Highway Administration

Pedestrian Access Route (PAR): A continuous and unobstructed walkway within a pedestrian circulation path that provides accessibility.

Pedestrian Circulation Route (PCR): A prepared exterior or interior way of passage provided for pedestrian travel.

PROWAG: An acronym for the *Guidelines for Accessible Public Right-of-Way* issued in 2005 by the U.S. Access Board. This guidance addresses roadway design practices, slope, and terrain related to pedestrian access to walkways and streets, including crosswalks, curb ramps, street furnishing, pedestrian signals, parking, and other components of public rights-of-way.

Right of Way: A general term denoting land, property, or interest therein, usually in a strip, acquired for the network of streets, sidewalks, and trails creating public pedestrian access within a public entity's jurisdictional limits.

Section 504: The section of the Rehabilitation Act that prohibits discrimination by any program or activity conducted by the federal government.

Uniform Accessibility Standards (UFAS): Accessibility standards that all federal agencies are required to meet; includes scoping and technical specifications.

United States Access Board: An independent federal agency that develops and maintains design criteria for buildings and other improvements, transit vehicles, telecommunications equipment, and electronic and information technology. It also enforces accessibility standards that cover federally funded facilities.

United States Department of Justice (DOJ): The United States Department of Justice (often referred to as the Justice Department or DOJ), is the United States federal executive department responsible for the enforcement of the law and administration of justice.

Public Rights-of-way Accessibility Guidelines (PROWAG)

Mn/DOT has adopted PROWAG with the following modifications:

R301.7.3 Flangeway Gaps at Non-Freight Rail Crossings – deleted.

R301.7.4 Flangeway Gaps at Freight Rail Crossings – deleted.

R305.2.2.1 Crossings with Stop Control – modified to desirable not maximum.

R305.2.2.2 Crossings without Stop Control – modified to desirable not maximum.

R305.6.2 Signals – deleted.

R305.7 Channelized Turn Lanes at Intersections – deleted.

The following version of PROWAG has been revised from its original state to reflect these modifications.

NOTICE OF AVAILABILITY OF DRAFT PUBLIC RIGHTS-OF-WAY ACCESSIBILITY GUIDELINES

The Americans with Disabilities Act (ADA) recognizes and protects the civil rights of people with disabilities and is modeled after earlier landmark laws prohibiting discrimination on the basis of race and gender. To ensure that buildings and facilities are accessible to and usable by people with disabilities, the ADA establishes accessibility requirements for State and local government facilities, places of public accommodation, and commercial facilities. Under the ADA, the Access Board has developed and continues to maintain design guidelines for accessible buildings and facilities known as the ADA Accessibility Guidelines (ADAAG). ADAAG covers a wide variety of facilities and establishes minimum requirements for new construction and alterations.

The Board maintains a similar responsibility for accessibility guidelines under the Architectural Barriers Act (ABA). The ABA requires access to certain facilities designed, built, altered, or leased with Federal funds. Like ADAAG, the Board's ABA accessibility guidelines apply to new construction and alterations.

The Board's guidelines become enforceable when they are adopted by the standard setting agency for the ADA and the ABA. The agencies responsible for standards under the ADA are the Department of Justice (DOJ) and the Department of Transportation (DOT). The agencies responsible for standards under the ABA are the General Services Administration (GSA), the Department of Defense (DOD), the Department of Housing and Urban Development (HUD), and the United States Postal Service (USPS).

The Board plans to undertake rulemaking to supplement its ADA and ABA accessibility guidelines, which primarily cover facilities on sites, by adding new provisions specific to public rights-of-way. The Board's aim is to ensure that access for persons with disabilities is provided wherever a pedestrian way is newly built or altered, and that the same degree of convenience, connection, and safety afforded the public generally is available to pedestrians with disabilities. The guidelines would not require alterations to existing public rights-of-way, but would apply where a pedestrian route or facility is altered as part of a planned project to improve existing public rights-of-way.

BACKGROUND

The Need for Guidelines on Public Rights-of-Way

Local jurisdictions, and other entities covered by the ADA or ABA, must ensure that the facilities they build or alter are accessible to people with disabilities. The Board's ADA and ABA accessibility guidelines specify the minimum level of accessibility in new construction and alteration projects and serve as the basis for enforceable standards maintained by other agencies. Currently, the Board's guidelines, like the industry standards from which they derive, focus mainly on facilities on sites. While they address certain features common to public sidewalks, such as curb ramps, accessible routes, ground and floor surfaces, and bus stops and shelters, further guidance is necessary to address conditions unique to public rights-of-way. Various

constraints posed by space limitations at sidewalks, roadway design practices, slope, and terrain raise valid questions on how and to what extent access can be achieved. Access for blind pedestrians at street crossings and wheelchair access to on-street parking are typical of the issues for which additional guidance is needed. In addition, new trends in roadway design, such as the growing use of traffic roundabouts, pose additional challenges to access, while various technological innovations, particularly those pertaining to pedestrian signaling devices, offer new solutions.

The Board previously proposed guidelines for public rights-of-way under the ADA which were published for public comment in 1992 and 1994. Based on the comments received, the Board determined that it should further coordinate with the transportation industry and State and local governments before continuing its rulemaking. Consequently, the Board undertook an outreach and training program on accessible public rights-of-way. Under this program, the Board developed a series of videos, an accessibility checklist, and a design guide on accessible public rights-of-way. In addition, the Board sponsored research on tactile warnings at street crossings, accessible pedestrian signals, and traffic roundabouts. The Board has made this information widely available to the public. The interest in these materials has underscored the need for criteria for public rights-of-way that are definitive and enforceable so that local jurisdictions and others are clear on their obligations when constructing or altering streets and sidewalks.

Public Rights-of-Way Access Advisory Committee

In resuming its rulemaking effort, the Board chartered an advisory committee in 1999 to develop recommendations on guidelines for accessible public rights-of-way. Use of advisory committees has become a standard practice in the Board's process for developing and updating design requirements. Through such committees, interested groups, including those representing designers, industry, and people with disabilities, play a substantive role in recommending to the Board the content of the guidelines to be developed. These committees provide significant sources of expertise while enhancing the level of consensus among stakeholders in advance of proposing a rule for public comment.

The Public Rights-of-Way Access Advisory Committee was composed of 33 members representing disability organizations, public works departments, transportation and traffic engineering groups, design professionals and civil engineers, government agencies, and standards-setting bodies. The committee coordinated its efforts with leading trade organizations represented on the committee, such as the American Association of State Highway and Transportation Officials, and federal agencies, such as the Federal Highway Administration, to ensure that its recommendations were consistent with generally accepted practice among design professionals. The committee organized several subcommittees focused on key issue areas. The subcommittee structure enabled members to continue work on a tight time schedule between meetings of the full committee and allowed for greater public participation in the process.

The advisory committee met regularly over a year's time, usually in Washington, D.C. but also in Austin and San Francisco. Its work culminated in the issuance of a report, "Building a True Community," which was submitted to the Board in January 2001 (http://www.access-board.gov/prowac/commrept/index.htm). The committee's report provides criteria for the construction or alteration of public rights-of-way that reflects the broad spectrum of expertise

represented by committee members. The report follows a "toolbox" approach to the establishment of guidelines designed to facilitate implementation and to promote an understanding of the needs of all users of public rights-of-ways. The report comprehensively covers the various components of public streets and sidewalks and provides criteria for sidewalks, street fixtures and furnishings, street crossings, vehicular ways, parking, and other components of public rights-of-way. In addition, the report includes advisory notes, figures, and discussion of issues that merit further study or special attention in the Board's rulemaking.

June 17, 2002 Release of Draft Guidelines

An ad hoc group of Board members reviewed the committee's report in depth and crafted a set of draft guidelines based on the committee's recommendations. Because the draft guidelines departed from the advisory committee's report in several areas, the Board made an advance draft of the guidelines available for comment by the public. The notice of availability of the draft guidelines was published in the Federal Register on June 17, 2002. The Board requested information and feedback on the draft guidelines, including usability and cost data. In addition to seeking written comment, the Board held a public hearing in Portland, Oregon.

Over 1,400 comments were received from the public in response to the publication of the draft. Of this total, almost 900 comments were tabulated from persons with disabilities and groups representing them; the great preponderance of comments in this category came from people who indicated that they were blind or had low vision. Slightly over 200 comments were submitted by respondents from the transportation industry: design engineers and consultants, State and local government departments of transportation, and the organizations and groups that represent them. Another 100 were received from State and local government administrative agencies. Comments are posted on the Board's website at http://www.access-board.gov/prowac/comments/index.htm.

Almost all of the commenters from the two major blindness organizations, the American Council of the Blind (ACB) and the National Federation of the Blind (NFB), and persons who were not affiliated with either organization addressed only the use of detectable warnings and/or accessible pedestrian signals (APS) and virtually all of them supported the requirement for these features in at least some locations (detectable warnings at islands and medians and at all low-slope sidewalk connections to the street; APS at complex intersections, irregular intersections, intersections with compound turning movements, and intersections with leading pedestrian intervals). Some commenters misunderstood the effect of the scoping provisions for these features, believing that all intersections would have to be retrofitted at tremendous cost. In fact, only future new projects would be subject to these guidelines. With respect to APS in particular, only pedestrian crossings that provide pedestrian signals would be required to include APS. Some commenters, expressing concerns about the noise output of APS, were apparently unfamiliar with the quiet, pedbutton-integrated devices now available in the United States (these devices are installed at the departure curb, near the listening user, rather than overhead).

Ten key issues from comment were identified for detailed analysis: crosswalk width; on-street parking; walking speed and pedestrian signal phase timing; elevators at pedestrian overpasses and underpasses; same-side alternate circulation routes; cross slope in crosswalks; detectable warnings; accessible pedestrian signals; roundabouts and roundabout signalization; and

alterations. These issues have been addressed in this second draft. Changes include the following:

- referenced Manual on Uniform Traffic Control Devices (MUTCD) for crosswalk width;
- reduced scoping in on-street parking to be consistent with parking lots;
- set walking speed at 3.5 fps (consistent with new recommendations currently under consideration by the National Committee on Uniform Traffic Control Devices);
- eliminated the provision requiring elevators to provide pedestrian access at overpasses and underpasses (either ramps, lifts, or elevators may be used);
- modified scoping and technical provisions for alternate circulation routes to be consistent with current MUTCD requirements and alterations requirements, which would permit opposite side routes if same-side routes are not feasible;
- provided relief (up to 5%) for maximum cross slope limits in pedestrian crosswalks at midblock and through-street locations where the roadway slope will necessarily exceed 2%;
- clarified the placement of detectable warnings on curb ramps, landings, and blended transitions;
- clarified the scoping in new construction and alterations of accessible pedestrian signals (APS);
- limited pedestrian signalization at roundabouts and channelized turn lanes to pedestrian crossings (to the splitter) of two lanes of traffic or more; and
- clarified the scope of alterations to include only that work included in the limits, boundaries, or scope of a planned project; clarified that there is no obligation in the guidelines to expand the scope or limits of a project to include other or adjacent work.

Other changes included the addition of significant advisory material throughout the document. Advisory notes are for informational purposes only.

The Board also considered industry recommendations that the guidelines be re-formatted to use transportation metrics and language and to be better coordinated with industry standards and documents, particularly the Manual on Uniform Traffic Control Devices (MUTCD).

This draft is now formatted as a stand-alone document that expresses its dimensioning requirements first in international units, as is done in other industry documents. Its provisions have been harmonized with current MUTCD standards, support, options, and guidance. Industry terms and phrases have been adopted, and industry practices recognized where feasible.

The Board is placing the revised draft in the docket to facilitate the gathering of cost data necessary for the next step in this rulemaking which is the preparation of a regulatory assessment for government review and approval prior to issuing a Notice of Proposed Rulemaking (NPRM). In order to develop an accurate picture of the potential costs and benefits of this rulemaking, the Board must work closely with the transportation industry representatives who have data on both current cost and industry practices and the knowledge and skills to assess potential effects.

The Board is not seeking comments on this draft. Readers will have an opportunity to provide input when the NPRM is published. Additional figures will be included in the NPRM.

Rulemaking Process
The Board reviewed the comments received to the draft guidelines and revised the guidelines in accordance with the comments received. The revisions are briefly discussed below in the section-by-section analysis.

The proposed rule will provide another opportunity for public comment on the guidelines. The Board will then proceed to finalize the guidelines based on public comments received in response to the proposed rule. The Board's guidelines serve as the basis for enforceable standards maintained by other agencies under the ADA and the ABA. The Department of Justice and the Department of Transportation maintain standards based on the Board's guidelines that apply to facilities covered by the ADA. Design standards for federally funded facilities covered by the ABA are maintained by the Department of Defense, the Department of Housing and Urban Development, the General Services Administration, and the U.S. Postal Service. These enforceable standards must be consistent with the Board's guidelines.

Relationship to ADA and ABA Accessibility Guidelines/Format
On July 23, 2004, the Board completed an update of ADAAG, the first comprehensive revision of the document since its publication in 1991. The revised ADAAG features a new format and numbering system and a host of updated scoping and technical provisions. On the same date, the Board updated its ABA Accessibility Guidelines along similar lines so that both of the documents are more consistent. The revised ADA and ABA Accessibility Guidelines may be found on the Board's website at http://www.access-board.gov/news/ada-aba.htm.

The draft guidelines for public rights-of-way published on June 17, 2002 were formatted to supplement the ADA and ABA guidelines and not as a stand-alone document. The guidelines were intended to ultimately comprise a new chapter on public rights-of-way. The current draft guidelines made available in this document are now formatted as a stand-alone document using transportation industry standards, terms, and measures in response to recommendations in industry comments. The document is identified by the prefix R in its provisions and has four chapters:

Chapter R1: Application and Administration covers purpose, effect on existing facilities, equivalent facilitation, conventions, figures, units of measurement, referenced documents, and definitions, harmonized with transportation industry usage.

Chapter R2: Scoping Requirements address what items of new construction and alteration are covered by this document and references technical sections that follow in Chapters R3 and R4. Key scoping provisions in R2 include: R204 Pedestrian Access Route; R205 Alternate Pedestrian Access Route; R206 Pedestrian Crossings; R207 Curb Ramps and Blended Transitions; R208 Accessible Pedestrian Signals; R209 Protruding Objects; R210 Pedestrian Signs; R211 Street Furniture; R212 Bus Stops; R213 Stairways; R214 Handrails; R215 Vertical Access; R216 On-street Parking; R217 Passenger Loading Zones; R218 Call Boxes; R219 Transit Platforms; R220 Escalators; R221 Detectable Warning Surfaces; and R222 Doors, Doorways, and Gates.

Coverage extends to temporary as well as permanent facilities. Chapter R2 also includes special provisions for historic facilities and contains a limited series of general exemptions from accessibility.

Chapter R3: Technical Provisions contains detailed specifications for new construction and alterations scoping in Chapter R2. Construction detailed in Chapter R3 is specific to public sidewalk, street crossing, and roadway projects, and covers the building blocks of pedestrian accessibility: the pedestrian access route (analogous to the accessible route on a site), curb ramps and blended transitions, pedestrian crossings (including those at roundabouts and channelized turn lanes), pedestrian signals, street furniture, and parking.

Chapter R4: Supplementary Technical Provisions include specifications adapted from the ADA and ABA Accessibility Guidelines (2004) for rights-of-way application, including such features as maneuvering clearances at doorways; drinking fountain, and telephone provisions; reach ranges; operable parts; handrails; and other items of broader application.

DISCUSSION OF PROVISIONS

DRAFT GUIDELINES FOR PUBLIC RIGHTS-OF-WAY

Clarifications, modifications, and changes that have been incorporated in this draft in response to public comment from industry, consumers, and State and local government agencies are briefly discussed below.

R1: APPLICATION AND ADMINISTRATION
R104.2.1 MUTCD. This draft references the 2003 edition of the Manual on Uniform Traffic Control Devices (MUTCD). The Access Board works closely with the MUTCD team at the Federal Highway Administration (FHWA) to harmonize standards and advisory material and to sponsor needed research. Changes in future MUTCD provisions for accessible pedestrian signals, markings (including detectable warnings), and temporary traffic zones are in process. A joint FHWA/ American Traffic Safety Services Association (ATSSA)/Access Board demonstration project identified desirable characteristics for pedestrian channelizing devices. FHWA research projects on pedestrian usability at roundabouts and contrast in detectable warnings are underway, and the Board has proposed a FY 2006 project on pedestrian demand signals for use at multi-lane roundabout crossings.

R105 Definitions. This draft uses definitions drawn from key industry references where they exist.

R2: SCOPING REQUIREMENTS
R201 Application. Text and advisory material has been added to clarify the application of these guidelines to new or altered work (permanent or temporary) put in place within the scope or limits of a planned project in the public right-of-way.

Other requirements, including those for existing facilities, maintenance of accessible features, and effective communication that derive from the ADA title II implementing regulations (28 CFR part 35) or Federal highway-aid funding (49 CFR part 27), are not addressed in these guidelines for new construction and alteration. Advisory notes have been added to clarify this difference.

This draft now includes a reference to the revised ADA and ABA Accessibility Guidelines (36 CFR part 1191) to cover buildings and facilities newly constructed or altered within the public right-of-way.

R202 Alterations and Additions to Existing Facilities. Text and advisory notes have been added to this draft to clarify the application of new construction guidelines to an alteration project. New work put in place within an existing developed right-of-way must comply with these guidelines to the maximum extent feasible; see Advisory R202.3. Transitional segments that connect undisturbed improvements with new work can facilitate compliance (R202.1.1). Where items are placed within an existing developed streetscape and the circulation route is not altered, items required to be accessible shall be located for optimal usability and access (R202.1.2).

An alteration is a change in a space or element that affects, or could affect, the accessibility or usability of that space or element. In general, when a feature in the public right-of-way is altered, the requirements for new construction in this document must be applied to the maximum extent feasible within the scope or boundary of the project that has been planned. This document does not contain a 'path of travel' obligation to expand a given scope of work to include other items or elements that are adjacent to the alteration project nor does it cover an agency's obligations to achieve program access in its existing facilities that are not being altered.

In response to the comments received, the Board has developed answers to frequently asked questions regarding the application of the alterations requirements. Those questions and the Board's responses have been included at the end of this discussion.

R204 Pedestrian Access Route (technical provisions at R301). This draft clarifies the requirement for a 1.2-meter-wide (4 ft) accessible route of travel within a pedestrian circulation path, which may be a wider sidewalk, shoulder (if pedestrian use is not prohibited), shared street, or street crossing. A provision requiring periodic passing spaces 1.5 m (5 ft) in width, omitted in the first draft, has been re-instituted. Because of the constraints imposed by right-of-way width, the pedestrian access route (PAR) is relieved of the slope limits that would apply to an accessible route on a site provided it matches the general grade of the adjacent roadway (R301.4). Where the PAR is supported by structure, as in an underpass, overpass, or bridge, this draft requires compliance with ADAAG requirements for ramps.

Technical provisions in the June 2002 draft that would have required a 30-inch separation between changes in level in the PAR have been replaced in this draft with provisions requiring a planar surface (R305.1) and limiting surface discontinuities (R301.5.2). An advisory note discourages the use of heavily textured, rough, or excessively chamfered unit pavings. Research undertaken by the Research and Rehabilitation Training Center (RRTC) at the University of Pittsburgh, under contract to a group of unit masonry associations, measured the vibration effects of various chamfer spacings on wheeled mobility devices and found that chamfers of less than 1.25 mm (.5 in), if flush, were not distinguishable from cast-in-place concrete sidewalks with a broom finish.

A series of related provisions in the June 2002 draft has been reorganized into R301.7 Horizontal Openings, which now includes walkway joints, gratings, flangeway gaps at rail crossings, and sill gaps at elevators and lifts. (Platform and car gaps at transit facilities are addressed at 36 CFR part 1191).

R205 Alternate Pedestrian Access Route. This draft clarifies that the establishment of an alternate pedestrian route is an alteration that must comply to the maximum extent feasible with technical provisions for the pedestrian access route, including curb ramps or blended transitions. MUTCD requirements and advisory material at Part 6D.01 and 6D.02 are referenced and an advisory note added to highlight the safety benefits of same-side alternate routes. Specifications for pedestrian channelizing devices and barricades at 302.4 include a reference to the MUTCD.

R206 Pedestrian Crossings (technical provisions at R305). This draft omits a provision in the June 2002 draft that would have required 2.4 m-wide (8 ft) markings at crosswalks. The MUTCD minimum of 1.8 m (6 ft) has been proposed at 305.2.1 of this draft.

Measurements on which pedestrian signal phase timing are based have been modified in response to industry comment. Calculations now proposed in R305.3 in the current draft would require the distance to be the full street width and the pedestrian walking speed to be 1.1 m/s (3.5 fps).

The June 2002 draft also proposed that the approaches to overpasses and underpasses be provided with elevators where the grade change was 1.5 m (5 ft) or greater. Both industry and persons with disabilities opposed this requirement with persons with disabilities expressing a preference for ramps, even if lengthy, to ensure the availability of a crossing. Elevators in single installations provide no access at all when out of service. Industry expressed concerns about cost and maintenance requirements. The current draft applies ramp provisions at R305.5 (but permits elevators, LULAs, and lifts).

Newly available research and the comments of both industry and consumer representatives confirm the Access Board's concerns about the usability of pedestrian crossings at roundabouts and channelized turn lanes. However, access to additional data has indicated that well-designed roundabouts and channelized turn lanes with single-lane crossings can provide cues that make non-visual use possible. Accordingly, this draft (R305.6.2) provides that signals (including accessible pedestrian signal features) be required only at multi-lane pedestrian crossings of roundabouts. The Board does not prescribe the signal operation here and has proposed that FHWA conduct research to identify appropriate technologies. Two-head signals that flash amber, then flash red and go to steady red, are in use in Australia and the United Kingdom. US motorists are familiar with pre-emptive signals installed for emergency vehicles. Utah has at least one roundabout that uses standard railway gates across the roadway when light rail cars pass through the roundabout. The Board believes that the occasional use of a properly-designed pedestrian demand signal may actually reduce delay at pedestrian crossings.

R207 Curb Ramps and Blended Transitions (technical provisions at R303). Additional text, advisory, and illustrations have been added to this draft to describe curb ramp types (perpendicular, parallel, and their combination) and to distinguish them from blended transitions, for which a definition has now been provided at R105. Blended transitions are connections between the PAR and the street that have a running slope of 1:20 or less. Level landings, gently sloped transitions, and raised crosswalks fall into this category. Parallel and perpendicular curb ramps have a running slope between 1:20 and 1:12 (steeper slopes are not permitted in new construction).

Non-visual wayfinding cues can be provided by the orientation of curb ramps, particularly if they are in-line with the path of pedestrian travel along a sidewalk. Curb ramps installed at tangent points rather than on the corner radius provide more usable cues and locate the shortest crossing point. The Access Board is collaborating with the Institute of Transportation Engineers (ITE) on a project to standardize sidewalk/ramp/crossing schemes for optimal non-visual cuing based

upon a range of corner radii and attached/separated sidewalk configurations. An advisory note (R303.1) in this draft notes the benefits for pedestrians.

Cross slope provisions at midblock curb ramps (R303) have been revised in response to industry comment to permit warping to meet roadway grade. Similar changes have been made to technical provisions at pedestrian crossings (R305.2.2). Crossings of streets without stop control would be permitted a 1:20 maximum cross slope.

Running slope limits at crosswalks (R305.2.3) are maintained at 1:20 maximum in this draft. Many commenters noted that design practices that approach this limit in new construction may have to mill the roadway crown before resurfacing in order to retain usable crossings.

R208 Accessible Pedestrian Signals (technical provisions at R306). APS provisions in this draft differ only slightly from those of the June 2002 draft. Many commenters to the June 2002 draft expressed concerns about the costs of retrofitting intersections with APS, which is not required by these or prior proposals, which guide only new construction and alterations. Where new pedestrian signals are being installed or added, scoping in this document would require that they incorporate audible and vibrotactile features.

Comments from disability organizations and individuals to the June 2002 draft were diverse. Many who believed that retrofitting was required objected to what they understood to be excessive cost. And even those who did not support a general requirement that all future pedestrian signals incorporate audible and vibrotactile formats nevertheless saw the need for them at certain types of intersections including irregular crossings, lengthy crossings, and at complex intersections with multiple vehicle turning phases or leading pedestrian interval phasing. Although many responders noted the utility of non-visual cues, a clear majority of commenters who identified themselves as blind supported universal pedestrian signals.

R209 Protruding Objects (technical provisions at R401). Advisory notes have been added at several places in this document to remind users of the need to consider projections into the pedestrian circulation route when coordinating the placement of improvements, appurtenances, utilities, or street furniture. Comments from disability organizations and individuals identified blocked or compromised pedestrian routes as a major barrier to independent travel. Protruding objects provisions in this draft have been revised only to accommodate the new format and add advisory information.

R210 Pedestrian Signs (technical provisions at R409). An advisory note has been added to clarify requirements for visual legibility in signs that indicate sidewalk closure, pedestrian detour, and tourist route signage covered in MUTCD. Braille street name signage is required only on APS pedbuttons (R306.4.2).

Signage provisions in this draft have been revised only to accommodate the new format and add advisory information.

R211 Street Furniture (technical provisions at R307). Advisory notes have been added at several places in this document to remind users of the need to consider the dimensions and use of

pedestrian circulation routes when coordinating the placement of improvements, appurtenances, utilities, or street furniture. Comments from disability organizations and individuals identified blocked or compromised pedestrian routes as a major barrier to independent travel.

Street furniture provisions in this draft have been revised only to accommodate the new format and add advisory information.

R212 Bus Stops (technical provisions at R410.2). An advisory note has been added to clarify the difference between establishing a bus stop by installing signage (signage must comply with R210.2) and constructing a bus stop (boarding/alighting areas, if provided, must comply with R410, bus shelters with R410.2).

Bus stop provisions in this draft have been revised only to accommodate the new format and add advisory information.

R213 Stairways (technical provisions at R407). Stairway provisions in this draft have been revised only to accommodate the new format.

R214 Handrails (technical provisions at R408). Handrail provisions in this draft have been revised only to accommodate the new format and add an advisory note on alterations and protruding objects.

R215 Vertical Access (technical provisions in ADAAG). Vertical access provisions in this draft have been revised only to accommodate the new format and add an advisory note on elevator use in extremes of terrain.

R216 On-Street Parking (scoping at Table R216; technical provisions at R308). Table R216 in this draft has been adapted from the table in ADAAG based upon the overall number of spaces provided within a block (or analog). Commenters strongly objected to scoping based upon the numbers of parking spaces on a block face, which could, in many places, require very high numbers of spaces disproportionate to those required in lots.

Additionally, this draft clarifies when, in new construction or alterations, the presence of a sidewalk or border wider than 4.3 m (14 ft) can accommodate an access aisle that is indented into the curb for protected transfer space, a construction that is similar to that of an on-street loading zone provided at an office, hotel, convention center, arena, or airport (R308.2.1).

Advisory notes have been added at several places in this section to convey additional information about indented, end-of-block, perpendicular or angled spaces, and signage.

R218 Call Boxes (technical provisions at R309). Call box provisions in this draft have been revised only to accommodate the new format and add an advisory note at R309.1 about the applicability of accessible call box technology to other types of communications systems, such as on-street security systems.

R219 Transit Platforms (technical provisions at R414). Transit provisions from the ADA and ABA Accessibility Guidelines (204) have been newly incorporated in this draft.

R220 Escalators. Escalator provisions in this draft have been revised only to accommodate the new format.

R221 Detectable Warning Surfaces (technical provisions at R304). Transportation industry and State and local government agency commenters expressed concern about the durability, maintainability, and contrast of detectable warning materials required at curb ramps and blended transitions in the June 2002 draft. Recent research by several State departments of transportation and by the Transportation Research Board identified several high-performing products suitable for both new construction and alterations. Approximately 20 manufacturers now produce detectable warning products in metal, concrete, tile, pavers, resilient sheets, and membrane types. The FHWA is currently overseeing human factors research intended to test the contrast effectiveness of 13 different detectable warning colors when viewed by people who have low vision.

Comments from disability organizations and individuals were divided in much the same way as consumer comments on accessible pedestrian signals. Many expressed concern about cost but, valued detectable warnings as a way to provide a cue at certain locations such as pedestrian waiting areas at roadway medians, islands, and roundabout splitter islands and at low-slope blended transitions to street crossings. A majority of these commenters favored the June 2002 draft provision requiring detectable warnings at flush transitions between sidewalks and street crossings.

The rows of domes in the detectable warning material (technical provisions at R304.2.2) must be aligned with the path of wheelchair travel, which is required to be perpendicular to the grade break at the toe of the ramp to permit tracking between dome rows. On blended transitions, dome orientation is not significant.

A new advisory note (R304.1.1) covers the use of radial dome patterns.

Detectable warnings provisions in this draft have also been clarified with respect to their permitted setback from the grade break marking the face of a curb. One corner of the detectable warning must be within 205 mm (8 in) of the grade break; no other point on the leading edge of the detectable warning may be more than 1.5 m (5 ft) from the grade break (R304.2.1).

R222 Doors, Doorways, and Gates (technical provisions at R411). These provisions have been added to this draft from the ADA and ABA Accessibility Guidelines (2004). Because public sidewalks serve the entrances and other facilities of abutters covered by title III of the ADA, coordination of slope, cross slope, and maneuvering space requirements is typically required. In many places, developers provide sidewalk improvements as part of a project. State and local governments must include accessibility compliance in such work.

TECHNICAL ASSISTANCE Q&A FOR ALTERATIONS PROJECTS

Alterations are projects planned for implementation by a jurisdiction. Program access obligations for existing facilities are not a part of the Board's accessibility guidelines, and the Board's responses to the following questions do not address program access issues (see title II of the ADA at 28 CFR 35.149 and 35.151).

CURB RAMPS

Question: A multi-block length of roadway is being resurfaced. The corners have curb ramps that meet some but not all of the current specifications; for example the cross slope may be too steep or the curb ramps do not have detectable warnings. Must the curb ramps be reconstructed as part of the resurfacing project?
Answer: Yes, if it is technically feasible to provide complying features. The work should be done at the same time the resurfacing is being done.

Question: New curb ramps are being installed at an existing developed corner. New construction standards require the curb ramp to be within the crosswalk, but an existing underground utility vault is located where the ramp should be. Must the utility vault be moved?
Answer: The scope of this project will determine the answer. If utilities are being moved for other reasons within the project limits, it may be possible to alter or relocate the vault. If project construction will not involve the vault, it may be technically infeasible to locate the curb ramp optimally. It may be possible to widen the crosswalk markings to include the curb ramp.

Question: What if the curb ramp can be placed over the vault, but the access cover would be located on the curb ramp?
Answer: If the access cover must be located on the curb ramp, it should meet the surface requirements of the pedestrian access route.

Question: One corner of an intersection is being altered by curb and gutter reconstruction and paired curb ramps are being installed as part of this project. The other three corners of the intersection are not being altered. Must curb ramps be provided at the unaltered corners as part of this work?
Answer: No. The scope of the project requires curb ramps only at the altered corner.

SIDEWALKS

Question: A project will be undertaken to connect a series of sidewalk segments near a school. Must the existing segments of sidewalk be modified if they do not meet width or cross slope provisions?
Answer: Yes, to the maximum extent feasible within the scope of the project. Agencies are not required to expand a planned scope of work to include other items of accessibility.

Question: A new sidewalk is being built along an existing road that contains driveway access points. Must those driveways be modified if their cross slope exceeds 2%?
Answer: Yes, to the maximum extent feasible within the scope of the project.

Question: A city is rebuilding a sidewalk along Main Street. The distance between the edge of the right-of-way and the existing road does not provide sufficient room for a 4-foot-wide pedestrian access route. Does the municipality have to acquire more right-of-way on private property or narrow the roadway to provide the necessary space?
Answer: No, these guidelines do not require the municipality to obtain right-of-way or to narrow roadways. A municipality may decide to do either for other reasons (for instance, the roadway may be narrowed as a larger traffic calming effort or as part of a larger project in the roadway).

SIGNALS

Question: Curb ramps are being installed at a signalized intersection as part of a roadway improvement project. Existing pedestrian signals are pedestrian actuated but the pushbuttons are not accessible or placed in accessible locations. Must accessible pedestrian signals be installed at the existing pedestrian signals?
Answer: If work on pedestrian pushbuttons is not planned as part of this project, there is no need to expand its scope to include APS.

Question: The pedestrian signals in a corridor are being replaced with new combined count-down signals. Must APS be included in the new system?
Answer: Yes. The installation of a new system is an alteration that requires compliance with the new construction guidelines to the maximum extent feasible. However, the addition of a new feature, such as a countdown face or larger display, to an existing installed system does not require that the scope of work be expanded to include other features.

Question: Count-down signal displays are being added to the existing pedestrian signal heads at an intersection, but the software and signal controller are not being altered. Must APS be installed?
Answer: No, simply adding a display to the existing WALK/DON'T WALK signal would not involve the system changes needed to implement APS.

Question: An intersection is being signalized and will include APS. The installation of stub poles on the existing sidewalks to mount the new pedbuttons will not involve disturbing the roadway or sidewalk. Must curb ramps be installed if none existed?
Answer: No. This is a project to install pedbuttons; it is not an alteration to the sidewalk or street that would require the installation of curb ramps, as required by 28 CFR 35.151(e).

Question: The pushbutton on an existing pedestrian signal is being replaced with a sturdier model. Must APS be installed?
Answer: No, but the new pushbutton must meet applicable requirements (i.e., location, height, operable parts).

Question: An intersection with sidewalks and pedestrian signals is being widened to include a right turn lane. Must APS be installed as a consequence of the widening project?

Answer: No, installing APS is not within scope of the project. Any new pedestrian pushbuttons installed in the course of the work must meet applicable requirements. Note that this project is an alteration to the street and sidewalk and thus must provide compliant curb ramps.

GENERAL

Question: The local public transit agency has designated a bus stop by placing a sign in the ground along a roadway with no sidewalk. Must a concrete or other improved surface be installed?

Answer: No, the placement of a bus stop sign alone does not require other site improvements. When other site improvements are provided they should meet the applicable access requirements.

CHAPTER R1: APPLICATION AND ADMINISTRATION

R101 Purpose

R101.1 General. This document contains scoping and technical requirements for accessibility to facilities for pedestrian circulation and use located in the public right-of-way. Advisory notes are for informational purposes only. These requirements are to be applied during the design, construction, additions to, and alterations of facilities in the public right-of-way to the extent required by regulations issued by Federal agencies.

Advisory R101.1 General. Access requirements are also addressed in the Manual on Uniform Traffic Control Devices (MUTCD), FHWA/US DOT, 2003 (http://mutcd.fhwa.dot.gov). MUTCD is a reference standard in this guideline.

Key transportation industry guidance documents also address accessibility in the public right-of-way and can provide useful information on design and construction. They include 'Guide for the Planning, Design, and Operation of Pedestrian Facilities', American Association of State Highway and Transportation Officials, July 2004 (www.aashto.org) and 'Designing Sidewalks and Trails for Access', FHWA/US DOT September 2001 (http://www.fhwa.dot.gov/environment/sidewalk2/index.htm).

R101.2 Effect on Existing Facilities. This document does not address existing facilities unless they are included in the scope of an alteration undertaken at the discretion of a covered entity. The U.S. Department of Justice and U.S. Department of Transportation have issued and enforce separate regulations for existing facilities subject to their requirements for program accessibility under the Americans with Disabilities Act.

Advisory R101.2 Effect on Existing Facilities. The U.S. Department of Justice ADA regulations require that the usability of accessible features be maintained (28 CFR §35.133 and §36.211).

Federal agencies and entities receiving federal funds may also have an obligation for program accessibility under section 504 of the Rehabilitation Act of 1973 as amended. For example, state departments of transportation that receive Federal-aid Highway funds must comply with program accessibility requirements issued by the U.S. Department of Transportation at 49 CFR part 27.

R102 Equivalent Facilitation

Nothing in these requirements prevents the use of designs, products, or technologies as alternatives to those prescribed, provided they result in substantially equivalent or greater accessibility and usability.

R103 Conventions

R103.1 Dimensions. Dimensions that are not stated as "maximum" or "minimum" are absolute.

> **R103.1.1 Construction and Manufacturing Tolerances.** All dimensions are subject to conventional industry tolerances except where the requirement is stated as a range with specific minimum and maximum end points.

Advisory R103.1.1 Construction and Manufacturing Tolerances. Conventional industry tolerances recognized by this provision include those for field conditions and those that may be a necessary consequence of a particular manufacturing process. Recognized tolerances are not intended to apply to design work.

Information on specific tolerances may be available from industry or trade organizations, code groups and building officials, and published references.

R103.2 Calculation of Percentages. Where the required number of elements or facilities to be provided is determined by calculations of ratios or percentages and remainders or fractions result, the next greater whole number of such elements or facilities shall be provided. Where the determination of the required size or dimension of an element or facility involves ratios or percentages, rounding down for values less than one half shall be permitted.

R103.3 Figures. Unless specifically stated otherwise, figures are provided for informational purposes only.

R103.4 Units of Measurement. Measurements are presented in this document in both metric and U.S. customary units and were developed independently within each system. The relationship between the metric and U.S. customary values is neither an exact (soft) conversion nor a completely rationalized (hard) conversion. The metric values are those that would have been used had the requirements been presented exclusively in metric units; the U.S. customary values are those that would have been used had the requirements been presented exclusively in U.S. customary units. Therefore, the user is advised to work entirely in one system and not attempt to convert directly between the two.

R104 Referenced Guidelines and Standards

R104.1 General. The guidelines and standards listed in R104.2 are incorporated by reference in this document and are part of the requirements to the prescribed extent of each such reference. The Director of the Federal Register has approved these guidelines and standards for incorporation by reference in accordance with 5 U.S.C. 552(a) and 1 CFR part 51. Copies of the referenced guidelines and standards may be inspected at the Architectural and Transportation Barriers Compliance Board, 1331 F Street, NW, Suite 1000, Washington, DC 20004; at the Department of Justice, Civil Rights Division,

Disability Rights Section, 1425 New York Avenue, NW, Washington, DC; at the Department of Transportation, 400 Seventh Street, SW, Room 10424, Washington DC; or at the National Archives and Records Administration (NARA). For information on the availability of this material at NARA, call (202) 741-6030, or go to: **http://www.archives.gov/federal_register/code_of_federal_regulations/ibr_locations.html**.

R104.2 Referenced Guidelines and Standards. The specific edition of the guidelines and standards listed below are referenced in this document. Where differences occur between this document and the reference, this document applies.

R104.2.1 MUTCD. Manual on Uniform Traffic Control Devices for Streets and Highways (MUTCD), 2003 edition. Copies of the referenced standard may be obtained on-line from the Federal Highway Administration at **http://mutcd.fhwa.dot.gov**. (see R205 and R302.4).

R104.2.2 ANSI/BHMA. Copies of the referenced standards may be obtained from the Builders Hardware Manufacturers Association, 355 Lexington Avenue, 17th floor, New York, NY 10017 (http://www.buildershardware.com).

ANSI/BHMA A156.10-1999 American National Standard for Power Operated Pedestrian Doors (see R411.3).

ANSI/BHMA A156.19-1997 American National Standard for Power Assist and Low Energy Power Operated Doors (see R411.3).

ANSI/BHMA A156.19-2002 American National Standard for Power Assist and Low Energy Power Operated Doors (see R411.3).

R104.2.3 ASME. Copies of the referenced standard may be obtained from the American Society of Mechanical Engineers, Three Park Avenue, New York, NY 10016 (http://www.asme.org).

ASME A17.1-2000 Safety Code for Elevators and Escalators, including ASME A17.1a-2002 Addenda and ASME A17.1b-2003 Addenda (see R220; R305.5.5).

R105 Definitions

R105.1 General. For the purpose of this document, the terms defined in R105.5 have the indicated meaning.

R105.2 Terms Defined in Referenced Guidelines and Standards. Terms not defined in R105.5 or in regulations issued by Federal agencies, but specifically defined in a referenced guideline or standard, shall have the specified meaning from the referenced guideline or standard unless otherwise stated.

R105.3 Undefined Terms. The meaning of terms not specifically defined in R105.5 or in regulations issued by Federal agencies or in referenced guidelines and standards shall be as defined by collegiate dictionaries in the sense that the context implies.

R105.4 Interchangeability. Words, terms and phrases used in the singular include the plural and those used in the plural include the singular.

R105.5 Defined Terms.

Accessible. Describes a facility in the public right-of-way that complies with this part.

Accessible Pedestrian Signal. A device that communicates information about the WALK phase in audible and vibrotactile formats.

Alteration. A change to a facility in the public right-of-way that affects or could affect access, circulation, or use.

Blended Transition. A connection with a grade of 5 percent or less between the level of the pedestrian walkway and the level of the crosswalk.

Channelization. The separation or regulation of conflicting traffic movements into definite paths of travel by devices such as cones, tubular markers, vertical panels, drums, barricades, temporary raised islands and barriers, to facilitate the orderly movements of traffic, to separate vehicles and pedestrians, and to protect them from construction or hazardous areas.

Channelized Intersection. An at-grade intersection in which traffic is directed into definite paths by islands.

Crosswalk. (Shall have the meaning in MUTCD Section 1A13.18).

Cross Slope. The grade that is perpendicular to the direction of accessible pedestrian travel. On a sidewalk, shoulder, or blended transition, it is measured perpendicular to the curb line or edge of the street or highway; on a curb ramp, it is measured perpendicular to the running grade.

Curb Line. A line at the face of the curb that marks the transition between the curb and the gutter, street, or highway.

Curb Ramp. A perpendicular or parallel ramp and its landing that cuts through or is built up to the curb.

Detectable Warning. A surface feature of truncated dome material built in or applied to the walking surface to advise of an upcoming change from pedestrian to vehicular way.

Element. An architectural or mechanical component of a building, facility, space, site, or public right-of-way.

Facility. All or any portion of buildings, structures, improvements, elements, and pedestrian or vehicular routes located in a public right-of-way.

Grade Break. The meeting line of two adjacent surface planes of different grade.

Highway. (Shall have the meaning in MUTCD Section 1A13.32).

Intersection. (Shall have the meaning in MUTCD Section 1A13.39).

Island. (Shall have the meaning in MUTCD Section 1A13.40).

Median. (Shall have the meaning in MUTCD Section 1A13.48).

Operable Part. A component of an element used to insert or withdraw objects, or to activate, deactivate, or adjust the element.

Pedestrian. (Shall have the meaning in MUTCD Section 1A13.55).

Pedestrian Access Route. A continuous and unobstructed walkway within a pedestrian circulation path that provides accessibility.

Pedestrian Circulation Path. A prepared exterior or interior way of passage provided for pedestrian travel.

Pushbutton Locator Tone. A repeating sound that identifies the pushbutton location and indicates the need to actuate pedestrian timing.

Public Right-of-Way. Public land or property, usually in interconnected corridors, that is acquired for or devoted to transportation purposes.

Roundabout Intersection. (Shall have the meaning in MUTCD Section 1A13.68).

Running Slope. The grade that is parallel to the direction of travel, expressed as a ratio of rise to run or as a percent.

Sidewalk. (Shall have the meaning in MUTCD Section 1A13.73).

Splitter Island. A flush or raised island that separates entering and exiting traffic in a roundabout intersection.

Street. (Shall have the meaning in MUTCD Section 1A13.84).

Street Furniture. Sidewalk equipment or furnishings.

Vibrotactile. A vibrating surface, located on the accessible pedestrian signal button, that communicates information through touch.

Walk Interval. That phase of a traffic signal cycle during which the pedestrian is to begin crossing, typically indicated by a WALK message or the walking person symbol and its audible equivalent.

Walkway. The continuous portion of the pedestrian access route that is connected to street crossings by curb ramps or blended transitions.

CHAPTER R2: SCOPING REQUIREMENTS

R201 Application

R201.1 Scope. All newly designed and newly constructed facilities located in the public right-of-way shall comply with these requirements. All altered portions of existing facilities located in the public right-of-way shall comply with these requirements to the maximum extent feasible.

Advisory R201.1 Scope. This document (see R101.1General) covers facilities for pedestrian circulation and use in the right-of-way. Examples of facilities include, but are not limited to, walkways and sidewalks, street or highway shoulders where pedestrians are not prohibited, crosswalks, islands and medians, overpasses and underpasses, on-street parking spaces and loading zones, and equipment, signals, signs, street furniture, and other appurtenances provided for pedestrians. Examples of facilities not included are manholes and utility vaults.

These requirements are to be applied to all areas of a facility within the scope or limits of the planned project unless expressly exempted or limited with respect to the number of multiple elements required to be accessible. For example, not all benches are required to be accessible; those that are not required to be accessible are not required to comply with these requirements or to be served by a pedestrian access route.

R201.2 Temporary and Permanent Facilities. These requirements shall apply to temporary and permanent facilities.

Advisory R201.2 Temporary and Permanent Facilities. Temporary facilities covered by these requirements include, but are not limited to, temporary routes around work zones, portable toilets in the public right-of-way, sidewalk vending facilities, street fair booths, performance stages and reviewing stands, and the pedestrian access routes that serve them. As permitted in R203.1.1, structures and equipment directly associated with the actual processes of construction are not required to be accessible.

Elements are often placed on a sidewalk without coordination by different agencies or entities. The U.S. Department of Justice ADA regulations require that the usability of accessible features be maintained (28 CFR §35.133 and §36.211).

R201.3 Requirements for Buildings and Structures. Buildings, structures, and similar facilities constructed in the public right-of-way but not specified in this document shall comply with the applicable requirements in 36 CFR part 1191 (the ADA and ABA Accessibility Guidelines).

R201.3.1 Buildings and Structures Covered by the Americans with Disabilities Act. Buildings, structures, and similar facilities covered by the Americans with Disabilities Act (ADA) shall comply with Appendices B and D to 36 CFR part 1191 (the ADA and ABA Accessibility Guidelines).

R201.3.2 Buildings and Structures Covered by the Architectural Barriers Act. Buildings, structures, and similar facilities covered by the Architectural Barriers Act (ABA) shall comply with Appendices C and D to 36 CFR part 1191.

R202 Alterations and Additions to Existing Facilities

R202.1 General. Additions and alterations to existing facilities shall comply with R202.

Advisory R202.1 General. Alterations include, but are not limited to, renovation, rehabilitation, reconstruction, historic restoration, resurfacing of circulation paths or vehicular ways, or changes or rearrangement of structural parts or elements of a facility.

The U.S. Department of Justice Title II regulation at 28 CFR 35.151(e) requires that curb ramps be installed whenever pedestrian walkways on sidewalks and across streets are newly constructed or altered. A 1993 case, Kinney v. Yerusalim, 9 F.3d 1067 (3d Cir. 1993), cert. denied, 511 U.S. 1033 (1994), held that resurfacing of a street constitutes an alteration that requires the installation of curb ramps (for text see http://www.ada.gov/deldot.htm).

Pavement patching and liquid-applied sealing, lane restriping, and short-term maintenance activities are not alterations.

R202.1.1 Transitional Segments. Transitional segments connecting to existing unaltered segments shall comply with R301 to the maximum extent feasible.

Advisory R202.1.1 Transitional Segments. It is often possible to construct transitional segments that blend between existing undisturbed facilities and newly-altered elements. This may permit the work of the alteration to more nearly meet the new construction standards. At a later time, when other walkway segments are altered, the non-complying transitional segments can be removed and replaced with complying work.

R202.1.2 Added Elements. Where elements are added and the circulation path is not altered, a pedestrian access route is not required.

Advisory R202.1.2 Added Elements. This provision does not eliminate the requirements specified for a particular element. For example, a bench that is installed on an existing sidewalk must have the necessary clearances and clear floor space specified in section 307. Where possible added elements should connect to an existing pedestrian access route.

R202.2 Additions. Each addition to an existing facility shall comply with the requirements for new construction. Where an existing pedestrian circulation path is extended, the extension shall contain a pedestrian access route complying with R301.

R202.3 Alterations. Where existing elements or spaces are altered, each altered element or space within the limits or scope of the project shall comply with the applicable requirements for new construction to the maximum extent feasible.

Advisory R202.3 Alterations. From the U.S. Department of Justice title III regulation at 28 CFR 36.402 Alterations: "The phrase 'to the maximum extent feasible,' … applies to the occasional case where the nature of an existing facility makes it virtually impossible to comply fully with applicable accessibility standards through a planned alteration. In these circumstances, the alteration shall provide the maximum physical accessibility feasible. Any altered features of the facility that can be made accessible shall be made accessible. If providing accessibility in conformance with this section to individuals with certain disabilities (e.g., those who use wheelchairs) would not be feasible, the facility shall be made accessible to persons with other types of disabilities (e.g., those who use crutches, those who have impaired vision or hearing, or those who have other impairments)."

Existing conditions (e.g., underlying terrain, right-of-way availability, underground structures, adjacent developed facilities, drainage, the presence of a notable natural or historic feature) may limit choices in an alterations project. In determining the maximum feasible accessibility that can be achieved for pedestrians with disabilities within a given alterations project, covered entities may consider constructability limits commensurate with those of the project as a whole.

There is no 'path-of-travel' obligation in these guidelines; covered entities shall apply the guidelines to achieve the maximum feasible accessibility within the limits of the planned project boundary or scope. However, the alteration of multiple elements or spaces within a facility may provide a cost-effective opportunity to make the entire facility, or a significant portion of it, accessible. When undertaking right-of-way alterations, jurisdictions should consult their transition plans to determine if related work has been identified as needed to achieve program accessibility in existing facilities at the same location.

Most rights-of-way work occurs as an alteration in a complex environment also regulated for vehicle operation and safety and subject to the well-established industry practice of applying 'engineering judgment'. These techniques can also be used to evaluate the feasibility of accessibility solutions.

R202.3.1 Prohibited Reduction in Required Access. An alteration shall not decrease or have the effect of decreasing the accessibility of a facility or an accessible connection to an adjacent building or site below the requirements for new construction in effect at the time of the alteration.

Advisory R202.3.1 Prohibited Reduction in Access. Sidewalk improvements that correct existing excessive cross slope should be carefully planned to avoid the imposition of barriers elsewhere, as, for example, creating excessive slope in a curb ramp or adding a step at an existing building entrance. Solutions that have been successfully implemented include:

1)split sidewalks that serve entrances and roadway at separate levels;
2)sidewalk widths of greater cross slope at street edge, with a pedestrian access route at lesser cross slope along building entrances;
3)a pedestrian access route along the curb, with ramped entrances along the shop fronts.

Where facilities are newly-constructed or altered along an existing sidewalk, it may not always be possible to provide the required level landing at an entrance or other feature required to be accessible without altering the sidewalk. Often, the jurisdiction will require the developer of a new or altered facility on a site served by the sidewalk to redesign and replace the public sidewalk as a part of the permit for construction. Careful coordination between public and private planning is the usual practice.

R202.3.2 Extent of Application. An alteration of an existing element, space, or area of a facility shall not impose a requirement for accessibility greater than required for new construction.

R202.3.3 Alterations to Qualified Historic Facilities. Where the State Historic Preservation Officer or Advisory Council on Historic Preservation determines that compliance with these requirements would threaten or destroy the historic significance of a qualified facility or element, compliance shall be required to the maximum extent that does not threaten or destroy the historic significance.

Advisory R202.3.3 Alterations to Qualified Historic Facilities. It is the element or facility subject to the alteration which must have historic significance. Furthermore, it must be determined that compliance with these requirements would threaten or destroy the historic significance, not merely alter the appearance.

R202.3.3.1 Historic District. Location of the facility or element within an historic district is not a sufficient condition for qualification as an historic facility.

Advisory R202.3.3.1 Historic District. Altered street crossings, sidewalks, and pedestrian facilities that are not historic but are merely located in historic areas must meet new construction requirements to the maximum extent feasible.

R202.3.3.2 Reproductions or Replications. Reproductions or replications of historic facilities shall not qualify as historic facilities.

R203 General Exceptions

R203.1 General. Facilities, sites, spaces, and elements are exempt from these requirements to the extent specified by R203.

R203.1.1 Construction Sites. Structures and sites directly associated with the actual processes of construction, including but not limited to, scaffolding, bridging, materials hoists, materials storage, portable toilet units provided for use exclusively by construction personnel, and construction trailers, shall not be required to comply with this part.

R203.1.2 Limited Access Spaces. Spaces accessed only by ladders, catwalks, crawl spaces, or very narrow passageways shall not be required to comply with this part.

R203.1.3 Machinery Spaces. Spaces or elements frequented only by service personnel for maintenance, repair, or occasional monitoring of equipment shall not be required to comply with this part. Machinery spaces include, but are not limited to, elevator pits or elevator penthouses; mechanical, electrical or communications equipment cabinets and vaults; electric substations and transformer vaults; and highway and tunnel utility facilities.

R203.1.4 Single Occupant Structures. Single occupant structures accessed only by passageways below grade or elevated above standard curb height, including but not limited to toll booths that are accessed only by underground tunnels, shall not be required to comply with this part.

R204 Pedestrian Access Route

Pedestrian circulation paths shall contain a pedestrian access route complying with R301 which connects to facilities, elements, and spaces required to be accessible by Chapter R2 and to accessible routes required to connect to public streets and sidewalks by section 206.2.1 of appendix B to 36 CFR part 1191 (the ADA and ABA Accessibility Guidelines) or section F206.2.1 of appendix C of 36 CFR 1191 (the ADA and ABA Accessibility Guidelines). Where a pedestrian circulation path is provided in the street, along a highway, or within a shoulder, it shall contain a pedestrian access route.

Advisory R204 Pedestrian Access Route. The pedestrian access route is a portion of the general pedestrian circulation path, which may include walkways, sidewalks, street crossings and crosswalks, and overpasses and underpasses, courtyards, elevators, platform lifts, stairs, ramps and landings. Where sidewalks are not provided, pedestrian circulation paths maybe provided in the street, highway, or shoulder unless pedestrian use is prohibited. This provision does not require a pedestrian access route if a pedestrian circulation path is not provided. -

R205 Alternate Pedestrian Access Route

When an existing pedestrian access route is blocked by construction, alteration, maintenance, or other temporary conditions, an alternate pedestrian access route complying to the maximum extent feasible with R301, R302, and Section 6D.01 and 6D.02 of the MUTCD (incorporated by reference; see R104.2.1) shall be provided.

Advisory R205 Alternate Pedestrian Access Route. Same-side travel is preferred because it does not increase pedestrian exposure and risk of accident consequent upon added street crossings. A route that uses vehicle lane width may be shorter, safer, and more usable than one that requires two street crossings, even if the roadway surface is imperfect. Part 6D.01 of the MUTCD requires alternate routes to provide the best elements of accessibility provided in the pedestrian circulation route before its disruption.

R206 Pedestrian Crossings

Where a pedestrian street or rail track crossing is provided, it shall contain a pedestrian access route complying with R301 and the applicable provisions of R305. Where a pedestrian rail crossing is not contained within a street or highway, a detectable warning shall be provided in compliance with R304.

Advisory R206 Pedestrian Crossings. When tracks are located in a street or highway that has a pedestrian route, the detectable warnings at the curb ramps make a second set of detectable warnings at the rail unnecessary in most applications. When rail tracks are not associated with a street or highway, they must have detectable warnings across the pedestrian access route on either side.

R207 Curb Ramps and Blended Transitions

A curb ramp or blended transition complying with R303, or a combination of curb ramps and blended transitions, shall connect the pedestrian access route to each pedestrian street crossing within the width of each crosswalk.

R208 Accessible Pedestrian Signals (APS)

Where pedestrian signals are provided at pedestrian street crossings, they shall comply with R306.

R209 Protruding Objects

Protruding objects along or overhanging any portion of a pedestrian circulation path shall comply with R401 and shall not reduce the clear width required for pedestrian access routes.

Advisory R209 Protruding Objects. Banners, awnings, tree branches, and temporary street or highway signs may also be hazards if not placed or maintained properly.

R210 Pedestrian Signs

R210.1 General. Signs designed primarily for pedestrian use shall comply with R210.

R210.2 Bus Route Identification. Bus route identification signs shall comply with R409.5.1 through R409.5.4, and R409.5.7 and R409.5.8. In addition, to the maximum extent practicable, bus route identification signs shall comply with R409.5.5. Bus route identification signs located at bus shelters shall provide raised and braille characters complying with R409.2, and shall have rounded corners. Signs shall not be required to comply with R409.2 where audible signs are user- or proximity-actuated or are remotely transmitted to a portable receiver carried by an individual. Bus schedules, timetables and maps that are posted at the bus stop or bus shelter are not required to comply.

R210.3 Directional, Informational, and Warning Signs. Directional, informational, and warning signs shall comply with R409.5.

Advisory R210.3 Directional, Informational, and Warning Signs. This provision applies legibility criteria to text signs. Examples of covered signs include, but are not limited to, sidewalk closure and pedestrian detour signing required by MUTCD, tourist information signing, and pedestrian route signing along an historic trail. Standard highway street-name signage is not covered by this part.

Braille identification of street names is a required feature where APS are provided (see R306).

A proximity-,-user-, or button-activated audible sign can provide this information in audible formats for pedestrians who don't read print. Such devices are now being manufactured for rights-of-way applications.

R211 Street Furniture

Street furniture intended for use by pedestrians and installed on or adjacent to a pedestrian circulation path shall comply with R307.

Advisory R211 Street Furniture. This scoping applies usability and operability criteria to certain items intended for pedestrian use in the public right-of-way. Where multiple items of a single type are provided at a single location, only a proportion may be required to be accessible and to be located on a pedestrian access route. Types of street furniture for which usability and operational criteria are provided include elements such as drinking fountains; public telephones; public toilet facilities; and tables, counters, and benches in R211; parking meters in R308.6; bus stops and shelters in R212; and signage, including bus stop signage, in R210. Where applicable, usability and operability provisions shall be satisfied in the design and construction of other items installed on or along a public right-of-way for pedestrian use (see sections R307, R401, and R405).

Some items intended for pedestrian use are installed on private property bounded by a public right-of-way and are intended for use from the right-of-way. Such items include wall-mounted ATMs, overnight mail kiosks, and walk-up service windows. Other items may be placed within a public sidewalk under the terms of a public space permit, such as the tables, chairs, and enclosures used by sidewalk cafes and restaurants or sidewalk vending carts and machines. The ADA and ABA Accessibility Guidelines cover these street furniture items, which should not be permitted to intrude on the required pedestrian access route or to violate protruding objects provisions.

Some street furniture, such as fire hydrants, signal control boxes, signal and sign poles, and overhead awnings and signs, is not intended for pedestrian operation. These and similar items shall not intrude on the required pedestrian access route or violate protruding objects provisions (see sections R301 and R401).

The location of bicycle racks on a public sidewalk should consider their footprint in use, since a bicycle carelessly fixed to a rack can become a barrier to accessible travel along a pedestrian access route or a protruding object along it.

Careful coordination is required between agencies and divisions authorized to install items on and along sidewalks in order to avoid inadvertent conditions that may constitute barriers. The U.S. Department of Justice ADA regulations require that the usability of accessible features be maintained (28 CFR §35.133 and §36.211).

R212 Bus Stops

Where provided, bus boarding and alighting areas shall comply with R410. Where provided, bus shelters shall comply with R410.2.

Advisory R212 Bus Stops. Where bus stops are marked along existing streets by the placement of signage, benches, or shelters, other features necessary to accessibility, such as surface improvements and curb ramps, will be subject to the program access requirements of the U.S. Department of Justice title II regulation at 28 CFR 35.151 or the U.S. Department of Transportation 504 regulation at 49 CFR Part 27. Transportation, public works, and transit agencies should consider including needed improvements in their transition plans and other program accessibility planning.

Furthermore, the placement of such items is subject to usability and protruding objects provisions that apply to street furniture. Bus stop benches and shelters shall not intrude into an existing pedestrian access route.

Signage required at bus stops is scoped at R210.2 Bus Route Identification.

R213 Stairways
Where provided on a pedestrian circulation path, stairways shall comply with R407. Stairways shall not be part of a pedestrian access route.

R214 Handrails
Where provided, handrails shall comply with R408.

Advisory R214 Handrails. It may not be feasible to install handrails with fully complying features on existing developed rights-of-way if the full horizontal handrail extension would narrow a required pedestrian access route or be a hazard to cross traffic. Handrail design should not constitute a protruding object (see R401).

R215 Vertical Access
Where provided, elevators, limited-use/limited-application elevators, and platform lifts shall comply with the applicable requirements in section 407, 408, and 410 of Appendix D to 36 CFR part 1191 (the ADA and ABA Accessibility Guidelines) and shall provide for independent operation. Vertical access shall remain unlocked during the operating hours of the facility served.

Advisory R215 Vertical Access. Elevators in public and private buildings accessible from the public right-of-way have been successfully used to provide low-effort routes between sidewalk levels in hilly terrain.

R216 On-Street Parking
Where on-street parking is marked or metered, accessible parking spaces complying with R308 shall be provided on the block perimeter in accordance with Table R216.

Advisory R216 On-Street Parking. Accessible on-street parking spaces are best located where the street has the least crown and grade and close to key destinations. Adjacent sidewalk space should be free of obstructions (including curb ramps) to permit deployment of a van side-lift.-

Table R216 Accessible Parking Spaces

Total Number of Marked or Metered Parking Spaces on the Block Perimeter	Minimum Required Number of Accessible Parking Spaces
1 to 25	1
26 to 50	2

51 to 75	3
76 to 100	4
101 to 150	5
151 to 200	6
201 and over	4% of total

R217 Passenger Loading Zones
Where passenger loading zones are provided, a minimum of one passenger loading zone complying with R412 shall be provided in every continuous 30 m (100 ft) of loading zone space or fraction thereof.

R218 Call Boxes
Where provided, roadside call boxes shall comply with R309.

R219 Transit Platforms
Where provided, transit platforms shall comply with R414.

R220 Escalators
Where provided, escalators shall comply with sections 6.1.3.5.6 and 6.1.3.6.5 of ASME A17.1 (incorporated by reference; see 104.2.2).

R221 Detectable Warning Surfaces
Detectable warning surfaces shall comply with R304.

Advisory R221 Detectable Warning Surfaces. Detectable warning surfaces are required where curb ramps, blended transitions, or landings provide a flush pedestrian connection to the street. Sidewalk crossings of residential driveways should not generally be provided with detectable warnings, since the pedestrian right-of-way continues across most driveway aprons and overuse of detectable warning surfaces should be avoided in the interests of message clarity. However, where commercial driveways are provided with traffic control devices or otherwise are permitted to operate like public streets, detectable warnings should be provided at the junction between the pedestrian route and the street.

R222 Doors, Doorways, and Gates
Where provided, doors, doorways, and gates shall comply with R411.

CHAPTER R3: TECHNICAL PROVISIONS

R301 Pedestrian Access Route

R301.1 General. Pedestrian access routes shall comply with R301 and shall connect pedestrian elements and facilities required to be accessible.

R301.2 Components. Pedestrian access routes shall consist of one or more of the following components: walkways, ramps, curb ramps (excluding flared sides) and landings, blended transitions, crosswalks, and pedestrian overpasses and underpasses, elevators, and platform lifts. Stairways and escalators shall not be part of a pedestrian access route. All components of a pedestrian access route shall comply with the applicable portions of this document.

R301.3 Width.

R301.3.1 Continuous Width. The minimum continuous and unobstructed clear width of a pedestrian access route shall be 1.2 m (4.0 ft), exclusive of the width of the curb.

Advisory R301.3.1 Continuous Width. The pedestrian access route provides a minimum accessible route of passage within a sidewalk or other walkway that may not comprise the full width of the pedestrian circulation route, particularly in urban areas. Industry-recommended sidewalk widths can be found in 'Guide for the Planning, Design, and Operation of Pedestrian Facilities', American Association of State Highway and Transportation Officials, July 2004 (www.aashto.org). The minimum width must be maintained without obstruction.

Where a pedestrian access route turns or changes direction, it should accommodate the continuous passage of a wheelchair or scooter. As with street or highway design for vehicles, additional maneuvering width or length may be needed at recesses and alcoves, doorways and entrances, and along curved or angled routings, particularly where the grade exceeds 5%. Individual segments of pedestrian access routes should have a minimum straight length of 1.2 m (4.0 ft).

Street furniture, including fixed or movable elements such as newspaper and sales racks, cafe seating and tables, bus shelters, vender carts, sidewalk sculptures, and bicycle racks, shall not reduce the required width of the pedestrian access route.

Provisions for protruding objects apply across the entire width of the pedestrian circulation path, not just the pedestrian access route.

R301.3.2 Width at Passing Spaces. Walkways in pedestrian access routes that are less than 1.5 m (5.0 ft) in clear width shall provide passing spaces at intervals of 61 m (200 ft) maximum. Pedestrian access routes at passing spaces shall be 1.5 m (5.0 ft) wide for a distance of 1.5m (5.0 ft).

R301.3.3 Width at Elevators and Lifts. The pedestrian access route at elevators and platform lifts shall be permitted to comply with the applicable requirements of section 407, 408, and 410 of Appendix D to 36 CFR part 1191 (the ADA and ABA Accessibility Guidelines).

R301.3.4 Width at Doors, Doorways, and Gates. The pedestrian access route through doors, doorways, and gates shall be permitted to comply with R411.2.3.

R301.4 Walkway Grade and Cross Slope.

R301.4.1 Cross Slope. The cross slope of the walkway of a pedestrian access route shall be 2 percent maximum.

R301.4.2 Street or Highway Grade. Where the walkway of a pedestrian access route is contained within a street or highway border, its grade shall not exceed the general grade established for the adjacent street or highway.

R301.4.3 Supported Slope. Where the walkway of a pedestrian access route is supported by a structure, it shall comply with R305.5.

Advisory R301.4.3 Supported Slope. This provision covers pedestrian access routes on bridges, overpasses, underpasses and similar facilities.

R301.5 Surface. The surface of the pedestrian access route shall be firm, stable and slip resistant.

Advisory R301.5 Surface. The U.S. Department of Justice ADA regulations require that the usability of accessible features be maintained (28 CFR §35.133 and §36.211).-

R301.5.1 Vertical Alignment. Vertical alignment shall be planar within curb ramp runs, blended transitions, landings, and gutter areas within the pedestrian access route, and within clear spaces required for accessible pedestrian signals, street furniture, and operable parts. Grade breaks shall be flush. Where the pedestrian access route crosses rail tracks at grade, the surface of the pedestrian access route shall be level and flush with the top of the rail at the outer edges of the rail. The surface between the rails shall be aligned with the top of the rail.

R301.5.2 Surface Discontinuities. Surface discontinuities shall not exceed 13 mm (0.50 in) maximum. Vertical discontinuities between 6.4 mm (0.25 in) and 13 mm (0.5 in) maximum shall be beveled at 1:2 minimum. The bevel shall be applied across the entire level change.

Advisory R301.5.2 Surface Discontinuities. Surfaces with individual units laid out of plane and those that are heavily textured, rough, or chamfered, will greatly increase rolling resistance and will subject pedestrians who use wheelchairs, scooters, and rolling walkers to the stressful (and often painful) effects of vibration. It is highly desirable to minimize surface discontinuities; when discontinuities on the pedestrian access route are unavoidable, they should be widely separated.

R301.7 Horizontal Openings.

R301.7.1 Walkway Joints and Gratings. Openings shall not permit passage of a sphere more than 13 mm (0.5 in) in diameter. Elongated openings shall be placed so that the long dimension is perpendicular to the dominant direction of travel.

R301.7.2 Clearances at Elevator and Platform Lift Sills. Clearances between elevator car platform sills and associated hoistways and between a platform lift sill and any landing shall comply with the applicable requirements in sections 407.4.3, 408.4.3, and 410.4 of Appendix D to 36 CFR part 1191 (the ADA and ABA Accessibility Guidelines).

~~**R301.7.3 Flangeway Gaps at Non-Freight Rail Crossings.** Openings for wheel flanges at pedestrian crossings of non-freight rail track shall be 64 mm (2.5 in) maximum.~~

~~**R301.7.4 Flangeway Gaps at Freight Rail Crossings.** Openings for wheel flanges at pedestrian crossings of freight rail track shall be 75 mm (3 in) maximum.~~

R302 Alternate Circulation Path

R302.1 General. Alternate circulation paths shall comply with R302 and shall contain a pedestrian access route complying with R301.

Advisory R302.1 General. Temporary routes are alterations to an existing developed pedestrian environment and are required to achieve the maximum accessibility feasible under existing conditions.

R302.2 Location. To the maximum extent feasible, the alternate circulation path shall be provided on the same side of the street as the disrupted route.

Advisory R302.2 Location. Where it is not feasible to provide a same-side alternate circulation path and pedestrians will be detoured, section 6D.02 of the MUTCD specifies that the alternate path provide a similar level of accessibility to that of the existing disrupted route. This may include the incorporation of accessible pedestrian signals (APS), curb ramps, or other accessibility features.

R302.3 Protection. Where the alternate circulation path is exposed to adjacent construction, excavation drop-offs, traffic, or other hazards, it shall be protected with a pedestrian barricade or channelizing device complying with R302.4.

Advisory R302.3 Protection. When it is necessary to block travel at the departure curb to close a crosswalk that is disrupted by excavation, construction, or construction activity, care must be taken to preserve curb ramp access to the perpendicular crosswalk. This may require additional pedestrian channelization if only a single diagonal curb ramp

serves the corner.

Figures 6H-28 and 6H-29 of the MUTCD specify notification signage for pedestrian closings and detours. Audible signage triggered by proximity switches can provide information to pedestrians who do not use print signs.

R302.4 Pedestrian Barricades and Channelizing Devices. Pedestrian barricades and channelizing devices shall be continuous, stable, and non-flexible and shall consist of a wall, fence, or enclosures specified in section 6F-58, 6F-63, and 6F-66 of the MUTCD (incorporated by reference; see R104.2.4).

R302.4.1 Detectable Base. A continuous bottom edge shall be provided 150 mm (6 in) maximum above the ground or walkway surface.

R302.4.2 Height. Devices shall provide a continuous surface or upper rail at 0.9 m (3.0 ft) minimum above the ground or walkway surface. Support members shall not protrude into the alternate circulation path.

R303 Curb Ramps and Blended Transitions

R303.1 General. Curb ramps and blended transitions shall comply with R303.

Advisory R303.1 General. Curb ramps can be a key source of wayfinding information for pedestrians who travel without vision cues if they are installed in-line with the direction of pedestrian travel at crossings. This is most easily accomplished by locating the ramp at the tangent point of the curb return, using either a small curb radius in an attached sidewalk or, in larger radii, a border or setback from the street edge. The Institute of Transportation Engineers (www.ite.org) has undertaken an industry-wide effort to develop and standardize intersection plans that optimize wayfinding. The challenge for practitioners is to provide usability for pedestrians in wheelchairs and scooters with a rectangular ramp plan that can also be directional.

R303.2 Types. Perpendicular curb ramps shall comply with R303.2.1 and R303.3; parallel curb ramps shall comply with R303.2.2 and R303.3; blended transitions shall comply with R303.2.3 and R303.3.

Advisory R303.2 Types. This provision permits a combination of ramps and blended transitions.

It will sometimes be necessary to limit the run of a parallel or perpendicular ramp in order to avoid 'chasing grade' indefinitely. In new construction at standard curb heights, required level landings can provide a datum for measuring most curb ramp slopes.

Limiting new ramps to an 8.3% slope on steep routes will result in a slight increase in grade on the balance of the route, but will facilitate street crossing and a timely and manageable ascent to the sidewalk, particularly important when crossing in traffic.

R303.2.1 Perpendicular Curb Ramps. Perpendicular curb ramps shall have a running slope that cuts through or is built up to the curb at right angles or meets the gutter grade break at right angles.

R303.2.1.1 Running Slope. The running slope shall be 5 percent minimum and 8.3 percent maximum but shall not require the ramp length to exceed 4.5 m (15.0 ft).

R303.2.1.2 Cross Slope. The cross slope at intersections shall be 2 percent maximum. The cross slope at midblock crossings shall be permitted to be warped to meet street or highway grade.

R303.2.1.3 Landing. A landing 1.2 m (4.0 ft) minimum by 1.2 m (4.0 ft) minimum shall be provided at the top of the curb ramp and shall be permitted to overlap other landings and clear space. Running and cross slopes at intersections shall be 2 percent maximum. Running and cross slope at midblock crossings shall be permitted to be warped to meet street or highway grade.

R303.2.1.4 Flares. Flared sides with a slope of 10 percent maximum, measured parallel to the curb line, shall be provided where a pedestrian circulation path crosses the curb ramp.

Advisory R303.2.1.4 Flares. Sides of ramps may be returned, providing useful directional cues, if protected from cross travel by landscaping, street furniture, poles, or equipment.

R303.2.2 Parallel Curb Ramps. Parallel curb ramps shall comply with R303.2.2, and shall have a running slope that is in-line with the direction of sidewalk travel.

R303.2.2.1 Running Slope. The running slope shall be 5 percent minimum and 8.3 percent maximum but shall not require the ramp length to exceed 4.5 m (15.0 ft).

.

R303.2.2.2 Cross Slope. The cross slope shall be 2 percent maximum.

R303.2.2.3 Landing. A landing 1.2 m (4.0 ft) minimum by 1.2 m (4.0 ft) minimum shall be provided at the bottom of the ramp run and shall be permitted to overlap other landings and clear floor or ground space. Running slope and cross slopes at intersections shall be 2 percent maximum. Running and cross slope at midblock crossings shall be permitted to be warped to meet street or highway grade.

R303.2.2.4 Diverging Sidewalks. Where a parallel curb ramp does not occupy the entire width of a sidewalk, drop-offs at diverging segments shall be protected.

R303.2.3 Blended Transitions. Blended transitions shall comply with R303.3. Running slope shall be 5 percent maximum and cross slope shall be 2 percent maximum.

R303.3 Common Elements. Curb ramps and blended transitions shall comply with R303.3.

R303.3.1 Width. The clear width of landings, blended transitions, and curb ramps, excluding flares, shall be 1.2 m (4.0 ft) minimum.

R303.3.2 Detectable Warnings. Detectable warning surfaces complying with R304 shall be provided, where a curb ramp, landing, or blended transition connects to a street.

R303.3.3 Surfaces. Surfaces of curb ramps, blended transitions, and landings shall comply with R301. Gratings, access covers, and other appurtenances shall not be located on curb ramps, landings, blended transitions, and gutters within the pedestrian access route.

R303.3.4 Grade Breaks. Grade breaks at the top and bottom of perpendicular curb ramps shall be perpendicular to the direction of ramp run. At least one end of the bottom grade break shall be at the back of curb. Grade breaks shall not be permitted on the surface of curb ramps, blended transitions, landings, and gutter areas within the pedestrian access route. Surface slopes that meet at grade breaks shall be flush.

R303.3.5 Counter Slopes. The counter slope of the gutter or street at the foot of a curb ramp, landing, or blended transition shall be 5 percent maximum.

R303.3.6 Clear Space. Beyond the curb face, a clear space of 1.2 m (4.0 ft) minimum by 1.2 m (4.0 ft) minimum shall be provided within the width of the crosswalk and wholly outside the parallel vehicle travel lane.

R304 Detectable Warning Surfaces

R304.1 General. Detectable warnings shall consist of a surface of truncated domes aligned in a square or radial grid pattern and shall comply with R304.

R304.1.1 Dome Size. Truncated domes in a detectable warning surface shall have a base diameter of 23 mm (0.9 in) minimum to 36 mm (1.4 in) maximum, a top diameter of 50 percent of the base diameter minimum to 65 percent of the base diameter maximum, and a height of 5 mm (0.2 in).

Advisory R304.1.1 Dome Size. Where domes are arrayed radially, they may differ in diameter within the ranges specified.

R304.1.2 Dome Spacing. Truncated domes in a detectable warning surface shall have a center-to-center spacing of 41 mm (1.6 in) minimum and 61 mm (2.4 in) maximum, and a base-to-base spacing of 17 mm (0.65 in) minimum, measured between the most adjacent domes.

Advisory R304.1.2 Dome Spacing. Where domes are arrayed radially, they may differ in center-to-center spacing within the range specified.

R304.1.3 Contrast. Detectable warning surfaces shall contrast visually with adjacent gutter, street or highway, or walkway surface, either light-on-dark or dark-on-light.

Advisory R304.1.3 Contrast. Contrast may be provided on the full ramp surface but should not extend to the flared sides. Many pedestrians use the visual contrast at the toe of the ramp to locate the curb ramp opening from the other side of the street.

R304.1.4 Size. Detectable warning surfaces shall extend 610 mm (24 in) minimum in the direction of travel and the full width of the curb ramp (exclusive of flares), the landing, or the blended transition.

R304.2 Location and Alignment.

R304.2.1 Perpendicular Curb Ramps. Where both ends of the bottom grade break complying with R303.3.4 are 1.5 m (5.0 ft) or less from the back of curb, the detectable warning shall be located on the ramp surface at the bottom grade break. Where either end of the bottom grade break is more than 1.5 m (5.0 ft) from the back of curb, the detectable warning shall be located on the lower landing.

Advisory R304.2.1 Perpendicular Curb Ramps. Detectable warnings are intended to provide a tactile equivalent underfoot of the visible curbline; those placed too far from the street edge because of a large curb radius may compromise effective crossing analysis.

R304.2.2 Landings and Blended Transitions. The detectable warning shall be located on the landing or blended transition at the back of curb.

R304.2.3 Alignment. The rows of truncated domes in a detectable warning surface shall be aligned to be perpendicular or radial to the grade break between the ramp, landing, or blended transition and the street.

Advisory R304.2.3 Alignment. Where a ramp, landing, or blended transition provides access to the street continuously around a corner, the vertical rows of truncated domes in a detectable warning surface should be aligned to be perpendicular or radial to the grade break between the ramp and the street for a 1.2 meter-wide (4.0 ft) width for each crosswalk served.

R304.2.3 Rail Crossings. The detectable warning surface shall be located so that the edge nearest the rail crossing is 1.8 m (6 ft) minimum and 4.6 m (15 ft) maximum from the centerline of the nearest rail. The rows of truncated domes in a detectable warning surface shall be aligned to be parallel with the direction of wheelchair travel.

R305 Pedestrian Crossings

R305.1 General. Pedestrian crossings shall comply with R305.

R305.2 Crosswalks. Crosswalks shall comply with R305.2 and shall contain a pedestrian access route that connects to departure and arrival walkways through any median or pedestrian refuge island.

R305.2.1 Width. Marked crosswalks shall be 1.8 m (6 ft) wide minimum.

R305.2.2 Cross Slope.

R305.2.2.1 Crossings with Stop Control. The cross slope shall be 2 percent ~~maximum.~~ desirable.

R305.2.2.2 Crossings without Stop Control. The cross slope shall be 5 percent ~~maximum~~. desirable.

R305. 2.2.3 Midblock Crossings. The cross slope at midblock crossings shall be permitted to be warped to meet street or highway grade.

R305.2.3 Running Slope. The running slope shall be 5 percent maximum, measured parallel to the direction of pedestrian travel in the crosswalk.

R305.3 Pedestrian Signal Phase Timing. All pedestrian signal phase timing shall be calculated using a pedestrian walk speed of 1.1 m/s (3.5 ft/s) maximum. The crosswalk distance used in calculating pedestrian signal phase timing shall include the entire length of the crosswalk.

R305.4 Medians and Pedestrian Refuge Islands. Medians and pedestrian refuge islands in crosswalks shall comply with R305.4 and shall contain a pedestrian access route, including passing space, complying with R301 and connecting to each crosswalk.

R305.4.1 Length. Medians and pedestrian refuge islands shall be 1.8 m (6.0 ft) minimum in length in the direction of pedestrian travel.

Advisory R305.4.1 Length. The edges of cut-throughs and curb ramps are useful as cues to the direction of a crossing. This should be considered when planning an angled route through a median or island. Curb ramps in medians and islands can add difficulty to the crossing for some users. There are many factors to consider when deciding whether to ramp or cut-through a median or island. Those factors may include slope and cross slope of road, drainage, and width of median or island.

R305.4.2 Detectable Warnings. Medians and pedestrian refuge islands shall have detectable warnings complying with R304 at curb ramps and blended transitions. Detectable warnings at cut-through islands shall be located at the curbline in-line with the face of curb and shall be separated by a 61 cm (2.0 ft) minimum length of walkway without detectable warnings. Where the island has no curb, the detectable warning shall be located at the edge of roadway.

R305.5 Pedestrian Overpasses and Underpasses. Pedestrian overpasses and underpasses shall comply with R305.5.

R305.5.1 Pedestrian Access Route. Pedestrian overpasses and underpasses shall contain a pedestrian access route complying with R301.

R305.5.2 Approach. Where the approach slope exceeds 5 percent, the approach shall be a ramp 1.2 m (4.0 ft) minimum in width complying with R406 or an elevator, a limited use/limited application elevator, or platform lift complying with the applicable requirements in section 407, 408, and 410 of Appendix D to 36 CFR part 1191 (the ADA and ABA Accessibility Guidelines) and providing for independent operation.

Advisory R305.5.2 Approach. This provision leaves the decision of type of accessible vertical access up to the jurisdiction. Long ramps can present difficulties for some persons with disabilities and may require snow clearance. Elevators or lifts entail a maintenance obligation.

R305.5.3 Stairs. Stairs shall comply with R407.

R305.5.4 Escalators. Escalators shall comply with sections 6.1.3.5.6 and 6.1.3.6.5 of ASME A17.1 (incorporated by reference; see R104.2.3) and shall have a clear width of 82 cm (32 in) minimum.

R305.6 Roundabout Intersections. Where pedestrian facilities are provided at roundabout intersections, they shall comply with R305.6 and shall contain a pedestrian access route complying with R301.

R305.6.1 Separation. If walkways are curb-attached, there shall be a continuous and detectable edge treatment along the street side of the walkway wherever pedestrian crossing is not intended. Where chains, fencing, or railings are used, they shall have a bottom element 38 cm (15 in) maximum above the pedestrian access route.

Advisory R305.6.1 Separation. Because the pedestrian crossings are located off to the side of the pedestrian route around the street or highway and noise from continuously circulating traffic may mask useful audible cues. Carefully delineated crosswalk approaches with plantings, low enclosures, curbs, or other defined edges can be effective in identifying the crossing location(s). European and Australian roundabout intersections extend a 6- cm (24-inch) width of tactile surface treatment from the centerline of the ramp or blended transition across the full width of the sidewalk to provide an underfoot cue. Several manufacturers make a surface of raised bars for this use. The detectable warning surface should not be used, since it indicates the edge of a street or highway.

Schemes that remove cyclists from the circulating street or highway by means of a ramp that angles from the curb lane to the sidewalk and then provide re-entry by means of a similar ramp beyond the pedestrian crossing may provide false cues about the location of a crossing to pedestrians who are using the edge of the sidewalk for wayfinding. Designers should consider ways to mitigate this hazard.

~~**R305.6.2 Signals.** At roundabouts with multi-lane crossings, a pedestrian activated signal complying with R306 shall be provided for each segment of each crosswalk, including the splitter island. Signals shall clearly identify which crosswalk segment the signal serves.~~

Advisory R305.6.2 Signals. There are many suitable demand signals for this application. Crossings at some roundabout intersections in Australia and the United Kingdom

incorporate such systems, in which the driver first sees a flashing amber signal upon pedestrian activation and then a solid red while the pedestrian crosses to the splitter island (there is no green). These types of signals are also used in some U.S. cities at pedestrian crossings of arterial street or highways. The pedestrian pushbutton should be identifiable by a locator tone, and an accessible pedestrian signal incorporated to provide audible and vibrotactile notice of the gap created by the red signal. If properly signed, it need only be used occasionally by those who do not wish to rely solely on visual gap selection.

Roundabout intersections with single-lane approach and exit legs are not required to provide signals.

~~**R305.7 Channelized Turn Lanes at Intersections.** Where pedestrian crosswalks are provided at multi-lane right or left channelized turn lanes at intersections with pedestrian signal indications, a pedestrian activated signal complying with R306 shall be provided.~~

Advisory R305.7 Channelized Turn Lanes at Intersections. Accessible pedestrian signal devices installed at splitter and 'pork chop' islands must be carefully located and separated so that signal spillover does not give conflicting information about which crossing has the WALK indication displayed.

Additional guidance on signal types is provided in Advisory R305.6.2.

R306 Accessible Pedestrian Signals (APS)

R306.1 General. Pedestrian signals shall comply with R306.

R306.2 Pedestrian Signals. Each crosswalk with pedestrian signal indication shall have an accessible pedestrian signal which includes audible and vibrotactile indications of the WALK interval. Where a pedestrian pushbutton is provided, it shall be integrated into the accessible pedestrian signal and shall comply with R306.2.

Advisory R306.2 Pedestrian Signals. Signals should generally sound and vibrate throughout the WALK interval. Where signals rest in WALK, audible operation may be limited to a repetition at short intervals rather than continuous sounding for several minutes.

R306.2.1 Location. Accessible pedestrian signals shall be located so that the vibrotactile feature can be contacted from the level landing serving a curb ramp, if provided, or from a clear floor or ground space that is in line with the crosswalk line adjacent to the vehicle stop line.

R306.2.1.1 Crossings. Accessible pedestrian signal devices shall be 3.0 m (10.0 ft) minimum from other accessible pedestrian signals at a crossing. The control face of the accessible pedestrian signal shall be

installed to face the intersection and be parallel to the direction of the crosswalk it serves.

R306.2.1.2 Medians and Islands. Accessible pedestrian signals located in medians and islands shall be 1.5 m (5.0 ft) minimum from other accessible pedestrian signals.

R306.2.2 Reach and Clear Floor or Ground Space. Accessible pedestrian pushbuttons shall be located within a reach range complying with R404. A clear floor or ground space complying with R402 shall be provided at the pushbutton and shall connect to or overlap the pedestrian access route.

R306.2.3 Audible Walk Indication. The audible indication of the WALK interval shall be by tone or speech message.

R306.2.3.1 Tones. Tones shall consist of multiple frequencies with a dominant component at 880 Hz. The duration of the tone shall be 0.15 s and shall repeat at intervals of 0.15 s.

Advisory R306.2.3.1 Tones. Many new accessible pedestrian signal installations in the US use speech messages, which are perceived as being more user-friendly than tones. However, such messages may not be intelligible under high-ambient-noise conditions or to non-English speakers. Electronic tones are more universal and unambiguous. Section 4E.06 of the MUTCD specifies content of speech messages.

R306.2.3.2 Volume. Tone or voice volume measured at 92 cm (3.0 ft) from the pedestrian signal device shall be 2 dB minimum and 5 dB maximum above ambient noise level in standard operation and shall be responsive to ambient noise level changes.

Advisory R306.2.3.2 Volume. Where additional volume or beaconing features are available on pedestrian activation, they will momentarily exceed volume limits.

R306.3 Pedestrian Pushbuttons. Pedestrian pushbuttons shall comply with R306.3.

R306.3.1 Operation. Pedestrian pushbuttons shall comply with R405.4.

R306.3.2 Pushbutton Locator Tone. Pedestrian pushbuttons shall incorporate a locator tone at the pushbutton. Pushbutton locator tone volume measured at 92 cm (3.0 ft) from the pushbutton shall be 2 dB minimum and 5 dB maximum above ambient noise level and shall be responsive to ambient noise level changes. The duration of the locator tone shall be 0.15 s maximum and shall repeat at intervals of one second. The locator tone shall operate during the DON'T WALK and flashing DON'T WALK intervals only and shall be deactivated when the pedestrian signal is not operative.

R306.3.3 Size and Contrast. Pedestrian pushbuttons shall be a minimum of 0.5 cm (2 in) across in one dimension and shall contrast visually with their housing or mounting.

R306.3.4 Optional Features. An extended button press shall be permitted to activate additional features. Buttons that provide additional features shall be marked with three braille dots forming an equilateral triangle in the center of the pushbutton.

R306.4 Directional Information and Signs. Pedestrian signal devices shall provide tactile and visual signs complying with 306.4 on the face of the device or its housing or mounting to indicate crosswalk direction and the name of the street containing the crosswalk served by the pedestrian signal.

R306.4.1 Arrow. Signs shall include a tactile arrow aligned parallel to the crosswalk direction. The arrow shall be raised 0.8 mm (.03 inch) minimum and shall be 4 mm (1.5 in) minimum in length. The arrowhead shall be open at 45 degrees to the shaft and shall be 33 percent of the length of the shaft. Stroke width shall be 10 percent minimum and 15 percent maximum of arrow length. The arrow shall contrast with the background.

R306.4.2 Street Name. Accessible pedestrian signals (APS) shall include street name information aligned parallel to the crosswalk direction and shall comply with R409.3 or shall provide street name information in audible format.

R306.4.3 Crosswalk Configuration. Where provided, graphic indication of crosswalk configuration shall be tactile.

R307 Street Furniture

R307.1 General. Street furniture shall comply with R307.

Advisory R307.1 General. Elements are often placed on a sidewalk without coordination by different agencies or entities. Covered entities must ensure that the usability of the pedestrian access route is maintained.

Where items are added to an existing developed streetscape and the pedestrian walkway is not being replaced or altered within the scope of the project, locations should be carefully selected for minimum slope and cross slope and adequate width and maneuvering space to optimize usability.

R307.2 Clear Floor or Ground Space. Street furniture shall have clear space complying with R402 and shall be connected to the pedestrian access route.

R307.3 Drinking Fountains. Where drinking fountains are provided, they shall comply with R413.

R307.4 Public Telephones. Where public telephones are provided, they shall comply with R307.4.

R307.4.1 Single Telephone. Where a single public telephone is provided, it shall comply with sections 704.2 and 704.4 of Appendix D to 36 CFR part 1191 (the ADA and ABA Accessibility Guidelines).

R307.4.2 Multiple Telephones. Where a bank of public telephones is provided, at least one telephone shall comply with section 704.2 of Appendix D to 36 CFR part 1191, and at least one additional telephone shall comply with section 704.4 of Appendix D to 36 CFR part 1191 (the ADA and ABA Accessibility Guidelines).

R307.4.3 Volume Controls. All public telephones shall provide volume controls complying with section 704.3 of Appendix D to 36 CFR 1191.

R307.5 Public Toilet Facilities. Permanent or portable public toilet facilities shall comply with section 603 of Appendix D to 36 CFR part 1191. At least one fixture of each type provided shall comply with sections 604 through 610 of Appendix D to 36 CFR part 1191 (the ADA and ABA Accessibility Guidelines). Operable parts, dispensers, receptacles, or other equipment shall comply with R405. Where multiple single-user toilet facilities are clustered at a single location, at least 5 percent, but no fewer than one single-user toilet at each cluster shall comply with section 603 of Appendix D to 36 CFR part 1191 and shall be identified by the International Symbol of Accessibility complying with R409.7.2.1.

R307.6 Tables, Counters, and Benches. Tables, counters, and benches shall comply with R307.6.

R307.6.1 Tables. Where tables are provided in a single location, at least 5 percent but no fewer than one, shall comply with section 902 of Appendix D to 36 CFR part 1191 (the ADA and ABA Accessibility Guidelines).

R307.6.2 Counters. Where provided, counters shall comply with section 904 of Appendix D to 36 CFR part 1191 (the ADA and ABA Accessibility Guidelines).

R307.6.3 Benches.

R307.6.3.1 Clear Space for Wheelchairs at Benches. Where benches without tables are provided at a single location, at least 50 percent, but no fewer than one, shall provide clear space complying with R402 positioned at the end of the bench seat and located for shoulder-to-shoulder seating.

R307.6.3.2 Benches. Where benches without tables are provided at a single location, at least 50 percent, but no fewer than one, shall have a seat

height at the front edge of 43 cm (17 in) minimum and 49 cm (19 in) maximum above the ground or floor space.

Advisory R307.6.3.2 Benches. Benches will be most useful if they have full back support and armrests to assist in sitting and standing.

R308 On-Street Parking

R308.1 General. On-street parking spaces shall comply with R308.

R308.2 Parallel Parking Spaces.

R308.2.1 Wide Walkways. Where the width of the adjacent walkway exceeds 4.3 m (14 ft), an access aisle at least 1.5 m (5.0 ft) wide shall be provided at street level the full length of the parking space and shall connect to a pedestrian access route serving the space. The access aisle shall not encroach on the vehicular travel lane.

Advisory R308.2.1 Wide Walkways. The walkway adjacent to an accessible parallel parking space should be free of obstructions such as signage, plantings, or equipment that would preclude deployment of a vehicle side-lift onto the access aisle or walkway.

A vehicle may park at the curb or at the parking lane boundary in order to locate the access aisle for individual use.

R308.2.2 Narrow Walkways. An access aisle is not required where the width of the adjacent walkway is less than or equal to 4.3 m (14 ft). When an access aisle is not provided, the parking space shall be located at either end of the block face.

Advisory R308.2.2 Narrow Walkways. An end-of-block space can be served by the curb ramps at the street crossing.

R308.3 Perpendicular or Angled Parking Spaces. Where perpendicular or angled parking is provided, an access aisle 2.4 m (8.0 ft) wide minimum shall be provided at street level the full length of the parking space and shall connect to a pedestrian access route serving the space. Access aisles shall be marked so as to discourage parking in them.

Advisory R308.3 Perpendicular or Angled Parking Spaces. All accessible angled and perpendicular on-street parking is treated as van parking with wide access aisles. In many cases, two spaces on either side of a single access aisle will satisfy scoping requirements. Where backing into the space (to locate the access aisle on the side needed) is not permitted, an access aisle for each accessible space should be provided.

R308.4 Curb Ramps or Blended Transitions. A curb ramp or blended transition complying with R303 shall connect the access aisle to the pedestrian access route.

R308.5 Signs. Parking space identification signs shall include the International Symbol of Accessibility complying with R409.5.10. Signs shall be located at the head or foot of the parking space so as not to interfere with the operation of a side lift or a passenger side transfer.

Advisory R308.5 Signs. Accessible parallel parking spaces located at the foot of a block can serve vans that have rear lifts or cars with scooter platforms.

R308.6 Parking Meters. Where parking meters are provided, they shall comply with R308.6. Operable parts shall comply with R405.

R308.6.1 Meters at Parking Spaces. A parking meter shall be located at the head or foot of a parallel parking space so as not to interfere with the operation of a side lift or a passenger side transfer.

R308.6.2 Remote Meters. Where payment for parking in a space is included in a centralized collection box or paying station, the space shall be connected to the centralized collection point with a pedestrian access route.

R308.6.3 Displays and Information. Displays and information shall be visible from a point located 1.0 m (3.3 ft) maximum above the center of the clear floor space in front of the meter.

R309 Call Boxes

R309.1 General. Call boxes shall comply with R309. Where provided, labeling shall comply with R409.2 and R409.3.

Advisory R309.1 General. These provisions may be helpful in making other types of emergency communication devices accessible such as on street security phone systems.

R309.2 Operable Parts.

R309.2.1 Electronic Operation. Operable parts shall comply with R405.

R309.2.2 Mechanical Operation. Operable parts shall comply with R404 and R405.2. Mechanically operated systems in which the signal is initiated by a lever pull shall be permitted to have an activating force of 53.4 N (12 lbs) maximum.

R309.3 Edge Protection. Edge protection complying with R406.8 shall be provided where the use area at the call box is adjacent to an abrupt level change.

R309.4 Motor Vehicle Turnouts. Where provided, a motor vehicle turnout shall have a minimum paved area of 4.9 m (16 ft) wide minimum and 7.0 m (23 ft) long minimum and shall connect to the clear space at the call box with a pedestrian access route complying with R301. Where shoulder texturing is used, it shall be discontinued at the turnout.

R309.5 Two-Way Communication. Where provided, two-way voice communication shall comply with R309.5, and with sections 708.2 and 708.3 of Appendix D to 36 CFR part 1191 (the ADA and ABA Accessibility Guidelines).

> **R309.5.1 Volume Controls.** Volume controls complying with section 704.3 of Appendix D to 36 CFR part 1191 (the ADA and ABA Accessibility Guidelines) shall be provided.
>
> **R309.5.2 TTY.** A TTY complying with section 704.4 of Appendix D to 36 CFR part 1191 (the ADA and ABA Accessibility Guidelines) shall be provided.

CHAPTER R4: SUPPLEMENTARY TECHNICAL PROVISIONS

R401 Protruding Objects

R401.1 General. Protruding objects on sidewalks and other pedestrian circulation paths shall comply with R401 and shall not reduce the clear width required for pedestrian access routes.

Advisory R401.1 General. Banners, awnings, tree branches, sidewalk sculpture, and temporary street or highway signs can become protruding objects if not placed or maintained properly.

R401.2 Protrusion Limits. Objects with leading edges more than 685 mm (27 in) and not more than 2 m (80 in) above the finish surface or ground shall protrude 100 mm (4 in) maximum horizontally into the pedestrian circulation path.

R401.3 Post-Mounted Objects. Objects mounted on free-standing posts or pylons, 685 mm (27 inches) minimum and 2030 mm (80 inches) maximum above the finish surface or ground, shall overhang circulation paths 100 mm (4 inches) maximum beyond the post or pylon base measured 150 mm (6 inches) minimum above the finish surface or ground. Where a sign or other obstruction is mounted between posts or pylons and the clear distance between the posts or pylons is greater than 305 mm (12 in), the lowest edge of such sign or obstruction shall be 685 mm (27 in) maximum or 2 m (80 in) minimum above the finish surface.

R401.4 Reduced Vertical Clearance. Guardrails or other barriers shall be provided where the vertical clearance is less than 2 m (80 in) high. The leading edge of such

guardrail or barrier shall be located 685 mm (27 in) maximum above the finish surface or ground.

R402 Clear Space

R402.1 General. Clear space at accessible pedestrian signals (APS), street furniture, and operable parts shall comply with R402.

R402.2 Surface Characteristics. Surfaces of clear spaces shall comply with R301.5 and shall have a slope and cross slope of 2 percent maximum.

R402.3 Size. The clear space shall be 760 mm (30 in) minimum by 1220 mm (48 in) minimum.

R402.4 Knee and Toe Clearance. Unless otherwise specified, clear space shall be permitted to include knee and toe clearance complying with R403.

R402.5.Position. Unless otherwise specified, clear space shall be positioned for either forward or parallel approach to an element.

R402.6 Approach. One full unobstructed side of the clear space shall adjoin a pedestrian access route or adjoin another clear space.

R402.7 Maneuvering Space. Where a clear space is located in an alcove or otherwise confined on all or part of three sides, additional maneuvering space shall be provided in accordance with R402.7.1 and R402.7.2.

> **R402.7.1 Forward Approach.** Alcoves shall be 915 mm (36 in) wide minimum where the depth exceeds 610 mm (24 in).
>
> **R402.7.2 Parallel Approach.** Alcoves shall be 1525 mm (60 in) wide minimum where the depth exceeds 380 mm (15 in).

R403 Knee and Toe Clearance

R403.1 General. Where space beneath an element is included as part of clear space, the space shall comply with R403. Additional space shall not be prohibited beneath an element but shall not be considered as part of the clear space.

Advisory R403.1 General. Clearances are measured in relation to the usable clear space, not necessarily to the vertical support for an element. When determining clearance under an object for required maneuvering space, care should be taken to ensure the space is clear of any obstructions.

R403.2 Toe Clearance.

R403.2.1 General. Space under an element between the finish surface and 230 mm (9 in) above the finish surface shall be considered toe clearance and shall comply with R403.2.

R403.2.2 Maximum Depth. Toe clearance shall extend 635 mm (25 in) maximum under an element.

R403.2.3 Minimum Required Depth. Where toe clearance is required at an element as part of a clear space, the toe clearance shall extend 430 mm (17 in) minimum under the element.

R403.2.4 Additional Clearance. Space extending more than 150 mm (6 in) beyond the available knee clearance at 230 mm (9 in) above the finish surface shall not be considered toe clearance.

R403.2.5 Width. Toe clearance shall be 760 mm (30 in) wide minimum.

R403.3 Knee Clearance.

R403.3.1 General. Space under an element between 230 mm (9 in) and 685 mm (27 in) above the finish surface shall be considered knee clearance and shall comply with R403.3.

R403.3.2 Maximum Depth. Knee clearance shall extend 635 mm (25 in) maximum under an element at 230 mm (9 in) above the finish surface.

R403.3.3 Minimum Required Depth. Where knee clearance is required under an element as part of a clear space, the knee clearance shall be 280 mm (11 in) deep minimum at 230 mm (9 in) above the finish surface, and 205 mm (8 in) deep minimum at 685 mm (27 in) above the finish surface.

R403.3.4 Clearance Reduction. Between 230 mm (9 in) and 685 mm (27 in) above the finish surface, the knee clearance shall be permitted to reduce at a rate of 25 mm (one inch) in depth for each 150 mm (6 in) in height.

R403.3.5 Width. Knee clearance shall be 760 mm (30 in) wide minimum.

R404 Reach Ranges

R404.1 General. Reach ranges shall comply with R404.

R404.2 Forward Reach.

R404.2.1 Unobstructed. Where a forward reach is unobstructed, the high forward reach shall be 1220 mm (48 in) maximum and the low forward reach shall be 380 mm (15 in) minimum above the finish surface.

R404.2.2 Obstructed High Reach. Where a high forward reach is over an obstruction, the clear space shall extend beneath the element for a distance not less than the required reach depth over the obstruction. The high forward reach shall be 1220 mm (48 in) maximum where the reach depth is 510 mm (20 in) maximum. Where the reach depth exceeds 510 mm (20 in), the high forward reach shall be 1120 mm (44 in) maximum and the reach depth shall be 635 mm (25 in) maximum.

R404.3 Side Reach.

R404.3.1 Unobstructed. Where a clear space allows a parallel approach to an element and the side reach is unobstructed, the high side reach shall be 1220 mm (48 in) maximum and the low side reach shall be 380 mm (15 in) minimum above the finish surface. An obstruction shall be permitted between the clear space and the element where the depth of the obstruction is 255 mm (10 in) maximum.

R404.3.2 Obstructed High Reach. Where a clear space allows a parallel approach to an element and the high side reach is over an obstruction, the height of the obstruction shall be 865 mm (34 in) maximum and the depth of the obstruction shall be 610 mm (24 in) maximum. The high side reach shall be 1220 mm (48 in) maximum for a reach depth of 255 mm (10 in) maximum. Where the reach depth exceeds 266 mm (10 in), the high side reach shall be 1170 mm (46 in) maximum for a reach depth of 610 mm (24 in) maximum.

R405 Operable Parts

R405.1 General. Operable parts shall comply with R405.

R405.2 Clear Space. A clear space complying with R402 shall be provided.

R405.3 Height. Operable parts shall be placed within one or more of the reach ranges specified in R404.

R405.4 Operation. Operable parts shall be operable with one hand and shall not require tight grasping, pinching, or twisting of the wrist. The force required to activate operable parts shall be 22 N (5 lbs) maximum.

R406 Ramps

R406.1 General. Ramps shall comply with R406.

R406.2 Slope. Ramp runs shall have a running slope between 5 percent minimum and 8.3 percent maximum.

Advisory R406.2 Slope. To accommodate the widest range of users, provide ramps with

the least possible running slope and, wherever possible, accompany ramps with stairs for use by those individuals for whom distance presents a greater barrier than steps, for example, people with heart disease or limited stamina.

R406.3 Cross Slope. Cross slope of ramp runs shall be 2 percent maximum.

R406.4 Surfaces. Ramp run surfaces shall comply with R301.5.

R406.5 Rise. The rise for any ramp run shall be 76 cm (30 in) maximum.

R406.6 Landings. Ramps shall have landings at the top and the bottom of each ramp run. Landings shall comply with R406.6.

R406.6.1 Slope. Perpendicular and parallel ramp landing slopes shall be 2 percent maximum.

R406.6.2 Width. The landing clear width shall be at least as wide as the widest ramp run leading to the landing.

R406.6.3 Length. The landing clear length shall be 1.5 m (5.0 ft) long minimum.

R406.6.4 Change in Direction. Ramps that change direction between runs at landings shall have a clear landing 1.5 m (5.0 ft) minimum by 1.5 m (5.0 ft) minimum.

R406.7 Handrails. Ramp runs with a rise greater than 15 cm (6 in) shall have handrails complying with R408.

R406.8 Edge Protection. Edge protection complying with R406.8.1 or R406.8.2 shall be provided on each side of ramp runs. Edge protection shall not be required on curb ramps and their landings.

R406.8.1 Extended Ramp Surface. The surface of the ramp run or landing shall extend 31 cm (12 in) minimum beyond the inside face of a handrail complying with R408.

Advisory R406.8.1 Extended Ramp Surface. The extended surface prevents wheelchair casters and crutch tips from slipping off the ramp surface.

R406.8.2 Curb or Barrier. A curb or barrier shall be provided that prevents the passage of a 100 mm (4 in) diameter sphere, where any portion of the sphere is within 100 mm (4 in) of the ramp surface.

R407 Stairways

R407.1 General. Stairways shall comply with R407.

R407.2 Treads and Risers. All steps on a flight of stairs shall have uniform riser heights and uniform tread depths. Risers shall be 100 mm (4 in) high minimum and 180 mm (7 in) high maximum. Treads shall be 28 cm (11 in) deep minimum.

R407.3 Open Risers. Open risers are not permitted.

R407.4 Tread Surface. Stairway treads shall comply with R301.5. Stairway treads shall have a 51 mm (2 in) minimum wide strip that contrasts visually with the tread and riser. The strip shall be located at the front of each tread and run the full width of the tread.

R407.5 Nosings. The radius of curvature at the leading edge of the tread shall be 13 mm (0.5 inch) maximum. Nosings that project beyond risers shall have the underside of the leading edge curved or beveled. Risers shall be permitted to slope under the tread at an angle of 30 degrees maximum from vertical. The permitted projection of the nosing shall extend 38 mm (1.5 in) maximum over the tread below.

R407.6 Handrails. Stairs shall have handrails complying with R408.

R408 Handrails

R408.1 General. Handrails provided along walking surfaces complying with R301, required at ramps complying with R406, and required at stairs complying with R407 shall comply with R408.

Advisory R408.1 General. Handrails are required on ramp runs with a rise greater than 150 mm (6 in) and on certain stairways. Handrails are not required on walking surfaces with running slopes less than 5 percent. However, if handrails are provided on walking surfaces with running slopes less than 5 percent, they must comply with R408. Sections R408.2, R408.3, and R408.10 do not apply to handrails provided on walking surfaces with running slopes less than 5 percent as those sections only reference requirements for ramps and stairs.

R408.2 Where Required. Handrails shall be provided on both sides of stairs and ramps.

R408.3 Continuity. Handrails shall be continuous within the full length of each stair flight or ramp run. Inside handrails on switchback or dogleg stairs and ramps shall be continuous between flights or runs.

R408.4 Height. Top of gripping surfaces of handrails shall be 87 cm mm (34 in) minimum and 97 cm (38 in) maximum vertically above walking surfaces, stair nosings, and ramp surfaces. Handrails shall be at a consistent height above walking surfaces, stair nosings, and ramp surfaces.

R408.5 Clearance. Clearance between handrail gripping surfaces and adjacent surfaces shall be 38 mm (1.5 in) minimum.

R408.6 Gripping Surface. Handrail gripping surfaces shall be continuous along their length and shall not be obstructed along their tops or sides. The bottoms of handrail gripping surfaces shall not be obstructed for more than 20 percent of their length. Where provided, horizontal projections shall occur 38 mm (1.5 in) minimum below the bottom of the handrail gripping surface.

Advisory R408.6 Gripping Surface. People with disabilities, older people, and others benefit from continuous gripping surfaces that permit users to reach the fingers outward or downward to grasp the handrail.

R408.7 Cross Section. Handrail gripping surfaces shall have a cross section complying with R408.7.1 or R408.7.2.

R408.7.1 Circular Cross Section. Handrail gripping surfaces with a circular cross section shall have an outside diameter of 32 mm (1.25 in) minimum and 51 mm (2 in) maximum.

R408.7.2 Non-Circular Cross Sections. Handrail gripping surfaces with a non-circular cross section shall have a perimeter dimension of 100 mm (4 in) minimum and 160 mm (6.25 in) maximum, and a cross-section dimension of 57 mm (2.25 in) maximum.

R408.8 Surfaces. Handrail gripping surfaces and any surfaces adjacent to them shall be free of sharp or abrasive elements and shall have rounded edges.

R408.9 Fittings. Handrails shall not rotate within their fittings.

R408.10 Handrail Extensions. Handrail gripping surfaces shall extend beyond and in the same direction of stair flights and ramp runs in accordance with R408.10. Extensions shall not be required for continuous handrails at the inside turn of switchback or dogleg stairs and ramps.

R408.10.1 Top and Bottom Extension at Ramps. Ramp handrails shall extend horizontally above the landing for 31 cm (12 in) minimum beyond the top and bottom of ramp runs. Extensions shall return to a wall, guard, or the landing surface, or shall be continuous to the handrail of an adjacent ramp run.

R408.10.2 Top Extension at Stairways. At the top of a stair flight, handrails shall extend horizontally above the landing for 31 cm (12 in) minimum beginning directly above the first riser nosing. Extensions shall return to a wall, guard, or the landing surface, or shall be continuous to the handrail of an adjacent stair flight.

R408.10.3 Bottom Extension at Stairways. At the bottom of a stair flight, handrails shall extend at the slope of the stair flight for a horizontal distance at least equal to one tread depth beyond the last riser nosing. Extension shall return to a wall, guard, or the landing surface, or shall be continuous to the handrail of an adjacent stair flight.

R409 Signs

R409.1 General. Signs shall comply with R409. Where both visual and tactile characters are required, either one sign with both visual and tactile characters, or two separate signs, one with visual, and one with tactile characters, shall be provided.

R409.2 Raised Characters. Raised characters shall comply with R409.2 and shall be duplicated in braille complying with R409.3. Raised characters shall be installed in accordance with R409.4.

Advisory R409.2 Raised Characters. Signs that are designed to be read by touch should not have sharp or abrasive edges.

R409.2.1 Depth. Raised characters shall be 0.8 mm (.03 in) minimum above their background.

R409.2.2 Case. Characters shall be uppercase.

R409.2.3 Style. Characters shall be sans serif. Characters shall not be italic, oblique, script, highly decorative, or of other unusual forms.

R409.2.4 Character Proportions. Characters shall be selected from fonts where the width of the uppercase letter "O" is 55 percent minimum and 110 percent maximum of the height of the uppercase letter "I".

R409.2.5 Character Height. Character height measured vertically from the baseline of the character shall be 16 mm (0.625 in) minimum and 51 mm (2 in) maximum based on the height of the uppercase letter "I". Where separate raised and visual characters with the same information are provided, raised character height shall be permitted to be 13 mm (0.5 in) minimum.

R409.2.6 Stroke Thickness. Stroke thickness of the uppercase letter "I" shall be 15 percent maximum of the height of the character.

R409.2.7 Character Spacing. Character spacing shall be measured between the two closest points of adjacent raised characters within a message, excluding word spaces. Where characters have rectangular cross sections, spacing between individual raised characters shall be 3.2 mm (0.125 in) minimum and 4 times the raised character stroke width maximum. Where characters have other cross sections, spacing between individual raised characters shall be 1.6 mm (.625 in)

minimum and 4 times the raised character stroke width maximum at the base of the cross sections, and 3.2 mm (0.125 in) minimum and 4 times the raised character stroke width maximum at the top of the cross sections. Characters shall be separated from raised borders and decorative elements 9.5 mm (.375 in) minimum.

R409.2.8 Line Spacing. Spacing between the baselines of separate lines of raised characters within a message shall be 135 percent minimum and 170 percent maximum of the raised character height.

R409.3 Braille. Braille shall be contracted (Grade 2) and shall comply with R409.3 and R409.4.

R409.3.1 Dimensions and Capitalization. Braille dots shall have a domed or rounded shape and shall comply with Table R409.3.1. The indication of an uppercase letter or letters shall only be used before the first word of sentences, proper nouns and names, individual letters of the alphabet, initials, and acronyms.

R409.3.1 Braille Dimensions

Measurement Range	Minimum in Millimeters Maximum in Millimeters
Dot base diameter	1.5 mm (0.059 in) to 1.6 mm (0.063 in)
Distance between two dots in the same cell[1]	2.3 mm (0.090 in) to 2.5 mm (0.100 in)
Distance between corresponding dots in adjacent cells[1]	6.1 mm (0.241 in) to 7.6 mm (0.300 in)
Dot height	0.6 mm (0.025 in) to 0.9 mm (0.037 in)
Distance between corresponding dots from one cell directly below[1]	10 mm (0.395 in) 10.2 mm to (0.400 in)

1. Measured center to center.

R409.3.2 Position. Braille shall be positioned below the corresponding text. If text is multi-lined, braille shall be placed below the entire text. Braille shall be separated 9.5 mm (.375 in) minimum from any other tactile characters and 9.5 mm (.375 in) minimum from raised borders and decorative elements. Braille provided on elevator car controls shall be separated 4.8 mm (.1875 in) minimum and shall be located either directly below or adjacent to the corresponding raised characters or symbols.

R409.4 Installation Height and Location. Signs with tactile characters shall comply with R409.4.

R409.4.1 Height Above Finish Floor or Ground. Tactile characters on signs shall be located 1.2 m (4.0 ft) minimum above the finish floor or ground surface, measured from the baseline of the lowest tactile character and 1.5 m (5.0 ft) maximum above the finish floor or ground surface, measured from the baseline of the highest tactile character. Tactile characters for elevator car controls shall not be required to comply with R409.4.1.

R409.5 Visual Characters. Visual characters shall comply with R409.5. Where visual characters comply with R409.2 and are accompanied by braille complying with R409.3, they shall not be required to comply with R409.5.2 through R409.5.9.

R409.5.1 Finish and Contrast. Characters and their background shall have a non-glare finish. Characters shall contrast with their background with either light characters on a dark background or dark characters on a light background.

Advisory R409.5.1 Finish and Contrast. Signs are more legible for persons with low vision when characters contrast as much as possible with their background. Additional factors affecting the ease with which the text can be distinguished from its background include shadows cast by lighting sources, surface glare, and the uniformity of the text and its background colors and textures.

R409.5.2 Case. Characters shall be uppercase or lowercase or a combination of both.

R409.5.3 Style. Characters shall be conventional in form. Characters shall not be italic, oblique, script, highly decorative, or of other unusual forms.

R409.5.4 Character Proportions. Characters shall be selected from fonts where the width of the uppercase letter "O" is 55 percent minimum and 110 percent maximum of the height of the uppercase letter "I".

R409.5.5 Character Height. Minimum character height shall comply with Table R409.5.5. Viewing distance shall be measured as the horizontal distance between the character and an obstruction preventing further approach towards the sign. Character height shall be based on the uppercase letter "I".

R409.5.5 Visual Character Height

Height to Finish Floor or Ground From Baseline of Character	Horizontal Viewing Distance	Minimum Character Height
1.0 m (3.3 ft) to less than or equal to 1.8 m	less than 1.8 m (6 ft)	16 mm (0.625 in)
	1.8 m (6 ft) and	16 mm (0.625 in), plus 3.2 mm (0.125

(5.8 ft)	greater	in) per 0.3 m (one ft) of viewing distance above 1.8 m (6 ft)
Greater than 1.8 m (5.8 ft) to less than or equal to 3.0 m (10 ft)	less than 4.6 m (15 ft)	51 mm (2 in)
	4.6 m (15 ft) and greater	51 mm (2 in), plus 3.2 mm (0.125 in) per 0.3 m (12 in) of viewing distance above 4.6 m (15 ft)
greater than 3.0 m (10 ft)	less than 6.4 m (21 ft)	75 mm (3 in)
	6.4 m (21 ft) and greater	75 mm (3 in), plus 3.2 mm (0.125 in) per 0.3 m (12 in) of viewing distance above 6.4 m (21 ft)

R409.5.6 Height from Finish Floor or Ground. Visual characters shall be 1.0 m (3.25 ft) minimum above the finish floor or ground. Visual characters indicating elevator car controls shall not be required to comply with R409.5.6.

R409.5.7 Stroke Thickness. Stroke thickness of the uppercase letter "I" shall be 10 percent minimum and 30 percent maximum of the height of the character.

R409.5.8 Character Spacing. Character spacing shall be measured between the two closest points of adjacent characters, excluding word spaces. Spacing between individual characters shall be 10 percent minimum and 35 percent maximum of character height.

R409.5.9 Line Spacing. Spacing between the baselines of separate lines of characters within a message shall be 135 percent minimum and 170 percent maximum of the character height.

R409.5.10 The International Symbol of Accessibility. The International Symbols of Accessibility shall comply with Figure 409.5.10.

Figure R409.5.10
International Symbol of Accessibility

R410 Bus Stops

R410.1 Bus Boarding and Alighting Areas. Bus boarding and alighting areas shall comply with R410.

Advisory R410.1 Bus Boarding and Alighting Areas. At bus stops where a shelter is provided, the bus stop pad can be located either within or outside of the shelter.

R410.1.1 Surface. Bus stop boarding and alighting areas shall have a firm, stable, and slip resistant surface.

R410.1.2 Dimensions. Bus stop boarding and alighting areas shall provide a clear length of 2.4 m (8.0 ft) minimum, measured perpendicular to the curb or vehicle street or highway edge, and a clear width of 1.5 m (5.0 ft) minimum, measured parallel to the vehicle street or highway.

R410.1.3 Connection. Bus stop boarding and alighting areas shall be connected to streets, sidewalks, or pedestrian paths by a pedestrian access route complying with R301.

R410.1.4 Grade. Parallel to the street or highway, the grade of the bus stop boarding and alighting area shall be the same as the street or highway, to the maximum extent practicable. Perpendicular to the street or highway, the grade of the bus stop boarding and alighting area shall not be steeper than 2 percent.

R410.2 Bus Shelters. Bus shelters shall provide a minimum clear space complying with R402 entirely within the shelter. Bus shelters shall be connected by pedestrian access route complying with R301 to a boarding and alighting area complying with R410.1.

R411 Doors, Doorways, and Gates

R411.1 General. Doors, doorways, and gates that are part of a pedestrian access route shall comply with R411.

Advisory R411.1 General. This section provides information on minimum width and maneuvering space requirements for doors, doorways, and gates. For additional requirements for accessible doors, doorways, and gates, see 36 CFR part 1191 Appendix D Section 404 (the ADA and ABA Accessibility Guidelines).

R411.2 Manual Doors, Doorways, and Manual Gates. Manual doors and doorways and manual gates intended for user passage shall comply with R411.2.

R411.2.1 Revolving Doors, Gates, and Turnstiles. Revolving doors, revolving gates, and turnstiles shall not be part of a pedestrian access route.

R411.2.2 Double-Leaf Doors and Gates. At least one of the active leaves of doorways with two leaves shall comply with R411.2.3 and R411.2.4.

R411.2.3 Clear Width. Door openings shall provide a clear width of 82 cm (32 in) minimum. Clear openings of doorways with swinging doors shall be measured between the face of the door and the stop, with the door open 90 degrees. Openings more than 61 cm (24 in) deep shall provide a clear opening of 92 cm (36 in) minimum. There shall be no projections into the required clear opening width lower than 87 cm (34 in) above the finish floor or ground. Projections into the clear opening width between 87 cm (34 in) and 2 m (6.7 ft) above the finish floor or ground shall not exceed 100 mm (4 in).

R411.2.4 Maneuvering Clearances. Minimum maneuvering clearances at doors and gates shall comply with R411.2.4. Maneuvering clearances shall extend the full width of the doorway and the required latch side or hinge side clearance.

R411.2.4.1 Swinging Doors and Gates. Swinging doors and gates shall have maneuvering clearances complying with Table R411.2.4.1.

R411.2.4.1 Maneuvering Clearances at Manual Swinging Doors and Gates

Type of Use		Minimum Maneuvering Clearance	
Approach Direction	**Door or Gate Side**	**Perpendicular to Doorway**	**Parallel to Doorway (beyond latch side unless noted)**
From front	Pull	153 cm (60 in)	46 cm (18 in)
From front	Push	122 cm (48 in)	0 mm (0 in)[1]
From hinge side	Pull	153 cm (60 in)	92 cm (36 in)
From hinge side	Pull	137 cm (54 in)	107 cm (42 in)
From hinge side	Push	107 cm (42 in)[2]	56 cm (22 in)[3]
From latch side	Pull	122 cm (48 in)[4]	61 cm (24 in)
From latch side	Push	107 cm (42 in)[4]	61 cm (24 in)

1. Add 305 cm (12 in) if closer and latch are provided.
2. Add 150 mm (6 in) if closer and latch are provided.
3. Beyond hinge side.
4. Add 150 mm (6 in) if closer is provided.

R411.2.4.2 Doorways without Doors or Gates, Sliding Doors, and Folding Doors. Doorways less than 92 cm (36 in) wide without doors or gates, sliding doors, or folding doors shall have maneuvering clearances complying with Table R411.2.4.2.

R411.2.4.2 Maneuvering Clearances at Doorways without Doors or Gates, Manual Sliding Doors, and Manual Folding Doors

	Minimum Maneuvering Clearance	
Approach Direction	**Perpendicular to Doorway**	**Parallel to Doorway (beyond stop/latch side unless noted)**
From Front	122 cm (48 in)	0 mm (0 in)

From side[1]	107 cm (42 in)	0 mm (0 in)
From pocket/hinge side	107 cm (42 in)	56 cm (22 in)[2]
From stop/latch side	107 cm (42 in)	61 cm (24 in)

1. Doorway with no door only.
2. Beyond pocket/hinge side.

R411.2.4.3 Recessed Doors and Gates. Maneuvering clearances for forward approach shall be provided when any obstruction within 46 cm (18 in) of the latch side of a doorway projects more than 205 mm (8 in) beyond the face of the door, measured perpendicular to the face of the door or gate.

Advisory R411.2.4.3 Recessed Doors and Gates. A door can be recessed due to wall thickness or because of the placement of casework and other fixed elements adjacent to the doorway. This provision must be applied wherever doors are recessed.

R411.2.4.4 Floor or Ground Surface. Floor or ground surface within required maneuvering clearances shall comply with R301.5.

R411.2.5 Doors in Series and Gates in Series. The distance between two hinged or pivoted doors in series and gates in series shall be 1.2 m (48 in) minimum plus the width of doors or gates swinging into the space.

R411.2.6 Door and Gate Hardware. Handles, pulls, latches, locks, and other operable parts on doors and gates shall comply with R405. Operable parts of such hardware shall be 87 cm (34 in) minimum and 122 cm (48 in) maximum above the finish floor or ground. Where sliding doors are in the fully open position, operating hardware shall be exposed and usable from both sides.

R412 Passenger Loading Zones

R412.1 General. Passenger loading zones shall comply with R412.

R412.2 Vehicle Pull-Up Space. Passenger loading zones shall provide a vehicular pull-up space 2.4 m (8 ft) wide minimum and 6.1 m (20 ft) long minimum.

R412.3 Access Aisle. Passenger loading zones shall provide access aisles complying with R412 adjacent to the vehicle pull-up space. Access aisles shall adjoin a pedestrian access route and shall not overlap the vehicular way.

R412.3.1 Width. Access aisles serving vehicle pull-up spaces shall be 1.5 m (5.0 ft) wide minimum.

R412.3.2 Length. Access aisles shall extend the full length of the vehicle pull-up spaces they serve.

R412.3.3 Marking. Access aisles shall be marked so as to discourage parking in them.

R412.4 Floor and Ground Surfaces. Access aisles serving vehicle pull-up spaces shall comply with R301.5. Access aisles shall be at the same level as the vehicle pull-up space they serve.

R412.5 Vertical Clearance. Vehicle pull-up spaces, access aisles serving them, and a vehicular route to and from the passenger loading zone shall provide a vertical clearance of 3 m (9.5 ft) minimum.

R413 Drinking Fountains

R413.1 General. Drinking fountains shall comply with R401 and R413.

R413.2 Clear Floor Space. Units shall have a clear space complying with R402 positioned for a forward approach and centered on the unit. Knee and toe clearance complying with R403 shall be provided.

R413.3 Operable Parts. Operable parts shall comply with R405.

R413.4 Spout Height. Spout outlets shall be 92 cm (36 in) maximum above the finish floor or ground.

R413.5 Spout Location. The spout shall be located 38 cm (15 in) minimum from the vertical support and 125 mm (5 in) maximum from the front edge of the unit, including bumpers.

R413.6 Water Flow. The spout shall provide a flow of water 100 mm (4 in) high minimum and shall be located 125 mm (5 in) maximum from the front of the unit. The angle of the water stream shall be measured horizontally relative to the front face of the unit. Where spouts are located less than 75 mm (3 in) of the front of the unit, the angle of the water stream shall be 30 degrees maximum. Where spouts are located between 75 mm (3 in) and 125 mm (5 in) maximum from the front of the unit, the angle of the water stream shall be 15 degrees maximum.

Advisory R413.6 Water Flow. The purpose of requiring the drinking fountain spout to produce a flow of water 4 inches (100 mm) high minimum is so that a cup can be inserted under the flow of water to provide a drink of water for an individual who, because of a disability, would otherwise be incapable of using the drinking fountain.

R413.7 Drinking Fountains for Standing Persons. Spout outlets of drinking fountains for standing persons shall be 97 cm (38 in) minimum and 109 cm (43 in) maximum above the finish floor or ground.

R414 Rail Platforms

R414.1 General. Rail platforms shall comply with R414. In light rail, commuter rail, and intercity rail systems, platforms shall provide level-entry boarding where structurally and operationally practicable.

R414.2 Slope. Rail platforms shall not exceed a slope of 2 percent in all directions. Where platforms serve vehicles operating on existing track or track laid in existing street or highway, the slope of the platform parallel to the track shall be permitted to be equal to the slope (grade) of the street or highway or existing track.

R414.3 Detectable Warnings. Platform boarding edges not protected by platform screens or guards shall have detectable warnings complying with R304 along the full length of the public use area of the platform.

R414.4 Platform and Vehicle Floor Coordination. Station platforms shall be positioned to coordinate with vehicles in accordance with the applicable requirements of 36 CFR part 1192 (ADA Accessibility Guidelines for Transportation Vehicles). Low-level platforms shall be 205 mm (8 in) minimum above top of rail. Where vehicles are boarded from sidewalks or street-level, low-level platforms shall be permitted to be less than 205 mm (8 in).

*Advisory R414.4 Platform and Vehicle Floor Coordination. The height and position of a platform must be coordinated with the floor of the vehicles it serves to minimize the vertical and horizontal gaps, in accordance with the ADA Accessibility Guidelines for Transportation Vehicles (36 CFR part 1192). The vehicle guidelines, divided by bus, van, light rail, rapid rail, commuter rail, intercity rail, are available at **www.access-board.gov**. The preferred alignment is a high platform, level with the vehicle floor. In some cases, the vehicle guidelines permit use of a low platform in conjunction with a lift or ramp. Most such low platforms must have a minimum height of eight inches above the top of the rail. Some vehicles are designed to be boarded from a street or the sidewalk along the street. The exception permits those boarding areas to be less than eight inches high.*

R415 Rail Station Signs

R415.1 General. Rail station signs shall comply with R415.

Advisory R415.1 General. Emerging technologies such as audible sign systems using infrared transmitters and receivers may provide greater accessibility in the transit environment than traditional braille and raised letter signs. The transmitters are placed

on or next to print signs and transmit their information to an infrared receiver that is held by a person. By scanning an area, the person will hear the sign. This means that signs can be placed well out of reach of pedestrians, even on parapet walls and on walls beyond barriers. Additionally, such signs can be used to provide wayfinding information that cannot be efficiently conveyed on braille signs.

R415.2 Entrances. Where signs identify a station or its entrance, at least one sign at each entrance shall comply with R409.2 and shall be placed in uniform locations to the maximum extent practicable. Where signs identify a station that has no defined entrance, at least one sign shall comply with R409.2 and shall be placed in a central location. Tactile signs shall not be required where audible signs are remotely transmitted to hand-held receivers, or are user- or proximity-actuated.

R415.3 Routes and Destinations. Lists of stations, routes and destinations served by the station which are located on boarding areas, platforms, or mezzanines shall comply with R409.5. Signs covered by this requirement shall, to the maximum extent practicable, be placed in uniform locations within the system. Where sign space is limited, characters shall not be required to exceed 75 mm (3 in). At least one tactile sign identifying the specific station and complying with R409.2 shall be provided on each platform or boarding area. Tactile signs shall not be required where audible signs are remotely transmitted to hand-held receivers, or are user- or proximity-actuated. Route maps are not required to comply.

R415.4 Station Names. Stations covered by this section shall have identification signs complying with R409.5. Signs shall be clearly visible and within the sight lines of standing and sitting passengers from within the vehicle on both sides when not obstructed by another vehicle.

2015

MINNESOTA
ACCESSIBILITY CODE

MINNESOTA DEPARTMENT OF
LABOR & INDUSTRY

2015 Minnesota Accessibility Code

First Printing

ISBN: 978-1-60983-585-9

COPYRIGHT © 2014
by
INTERNATIONAL CODE COUNCIL, INC.

ALL RIGHTS RESERVED. This 2015 *Minnesota Accessibility Code* contains substantial copyrighted material from the 2012 *International Building Code*, Chapter 11 Accessibility, First Printing, and the ICC/ANSI A117.1-2009 Standard, which is a copyrighted work owned by the International Code Council, Inc. Without advance written permission from the copyright owner, no part of this book may be reproduced, distributed, or transmitted in any form or by any means, including, without limitation, electronic, optical or mechanical means (by way of example, and not limitation, photocopying, or recording by or in an information storage retrieval system). For information on permission to copy material exceeding fair use, please contact: Publications, 4051 West Flossmoor Road, Country Club Hills, IL 60478. Phone 1-888-ICC-SAFE (422-7233).

Trademarks: "International Code Council," the "International Code Council" logo and the "International Building Code" are trademarks of the International Code Council, Inc.

PRINTED IN THE U.S.A.

INTERNATIONAL CODE COUNCIL®

Copyright © 2014 ICC. ALL RIGHTS RESERVED. Accessed by William Munson on Jan 4, 2017 9:33:41 PM pursuant to License Agreement with ICC. No further reproduction or distribution authorized. ANY UNAUTHORIZED REPRODUCTION OR DISTRIBUTION IS A VIOLATION OF THE FEDERAL COPYRIGHT ACT AND THE LICENSE AGREEMENT, AND SUBJECT TO CIVIL AND CRIMINAL PENALTIES THEREUNDER.

Additional information on the Minnesota State Building Code can be found at the Minnesota Department of Labor & Industry's website:
http://www.dli.mn.gov/CCLD/Codes.asp

There you can find reference guides, maps, charts, fact sheets, archived references, Statute and Rule excerpts and other helpful information to assist you in using the Minnesota State Building Code.

Minnesota Rules material is published with the permission of the Office of the Revisor of Statutes.

INTERNATIONAL CODE COUNCIL®
Copyright © 2014 ICC. ALL RIGHTS RESERVED. Accessed by William Munson on Jan 4, 2017 9:33:41 PM pursuant to License Agreement with ICC. No further reproduction or distribution authorized. ANY UNAUTHORIZED REPRODUCTION OR DISTRIBUTION IS A VIOLATION OF THE FEDERAL COPYRIGHT ACT AND THE LICENSE AGREEMENT, AND SUBJECT TO CIVIL AND CRIMINAL PENALTIES THEREUNDER.

Important Disclaimer

Note: Minnesota Rules included in this document have been extracted from Minnesota Rules 2007 and from Minnesota Rules proposed for adoption in 2015. Although efforts have been made to ensure the accuracy of the Minnesota Rules included herein, the official Minnesota Rules are as published by the Office of the Revisor of Statutes: https://www.revisor.mn.gov/rules/

If there is a difference between the Minnesota Rules included herein and the official rules published by the Office of the Revisor of Statutes, the official rules published by the Office of the Revisor of Statutes take precedence.

The official rules published by the Office of the Revisor of Statutes must be used for any notice or legal documentation used in conjunction with the application or enforcement of the Minnesota State Building Code.

Neither the state of Minnesota nor its employees or agents make any representations or warranties, express or implied, with respect to the use or reliance on the information provided herein and the user assumes all risks and responsibilities associated with its use.

In no event shall the State of Minnesota or its employees be liable for any direct, indirect, incidental, special, exemplary, or consequential damages arising in any way out of the use of this material.

INTERNATIONAL CODE COUNCIL®

Copyright © 2014 ICC. ALL RIGHTS RESERVED. Accessed by William Munson on Jan 4, 2017 9:33:41 PM pursuant to License Agreement with ICC. No further reproduction or distribution authorized. ANY UNAUTHORIZED REPRODUCTION OR DISTRIBUTION IS A VIOLATION OF THE FEDERAL COPYRIGHT ACT AND THE LICENSE AGREEMENT, AND SUBJECT TO CIVIL AND CRIMINAL PENALTIES THEREUNDER.

SYMBOLS AND NOTATIONS IN THE CODE

➡ = Indicates where a paragraph or item has been deleted from the requirements of the 2009 *International Building Code* or the ICC/ANSI A117.1-2009.

> = Indicates model code language deleted by the State of Minnesota.

▌ = Indicates a technical change from the requirements of the 2009 *International Building Code*.

MN MN = Indicates a State of Minnesota amendment has been made to the 2012 *International Building Code* or the ICC/A117.1-2009.

INTERNATIONAL CODE COUNCIL®
Copyright © 2014 ICC. ALL RIGHTS RESERVED. Accessed by William Munson on Jan 4, 2017 9:33:41 PM pursuant to License Agreement with ICC. No further reproduction or distribution authorized. ANY UNAUTHORIZED REPRODUCTION OR DISTRIBUTION IS A VIOLATION OF THE FEDERAL COPYRIGHT ACT AND THE LICENSE AGREEMENT, AND SUBJECT TO CIVIL AND CRIMINAL PENALTIES THEREUNDER.

INTERNATIONAL CODE COUNCIL®
Copyright © 2014 ICC. ALL RIGHTS RESERVED. Accessed by William Munson on Jan 4, 2017 9:33:41 PM pursuant to License Agreement with ICC. No further reproduction or distribution authorized. ANY UNAUTHORIZED REPRODUCTION OR DISTRIBUTION IS A VIOLATION OF THE FEDERAL COPYRIGHT ACT AND THE LICENSE AGREEMENT, AND SUBJECT TO CIVIL AND CRIMINAL PENALTIES THEREUNDER.

TABLE OF CONTENTS

2015 MINNESOTA BUILDING CODE ADMINISTRATION 1

Section

1300.0010 Administration 1
1300.0020 Title 1
1300.0030 Purpose and Application 1
1300.0040 Scope 1
1300.0050 Chapters of Minnesota State Building Code 2
1300.0060 Optional Administration 2
1300.0070 Definitions 2
1300.0080 Code Adoption and Amendments 3
1300.0090 Department of Building Safety 3
1300.0110 Duties and Powers of Building Official 3
1300.0120 Permits 5
1300.0130 Construction Documents 7
1300.0140 Violations 8
1300.0150 Violations, Penalty 8
1300.0160 Fees 8
1300.0170 Stop Work Order 9
1300.0180 Unsafe Buildings or Structures 9
1300.0190 Temporary Structures and Uses 10
1300.0210 Inspections 10
1300.0215 Plumbing 11
1300.0220 Certificate of Occupancy 12
1300.0225 Maintenance 12
1300.0230 Board of Appeals 12
1300.0240 Disclaimer Clause 13
1300.0250 Severability 13

2015 MINNESOTA ACCESSIBILITY CODE 15

Section

1341.0005 Incorporation of Chapter 11 of the 2012 *International Building Code* by Reference 15
1341.0010 Referenced Standard 15

2015 MINNESOTA ACCESSIBILITY CODE (CHAPTER 11 OF THE 2012 IBC WITH MN AMENDMENTS) 17

Section

1101 General 17
1102 Definitions 17
1103 Scoping Requirements 18
1104 Accessible Route 19
1105 Accessible Entrances 20
1106 Parking and Passenger Loading Facilities 21
1107 Dwelling Units and Sleeping Units 21
1108 Special Occupancies 26
1109 Other Features and Facilities 28
1110 Signage 33
1111 Additions 34
1112 Alterations 34
1113 Change of Occupancy 36

ACCESSIBILITY, TECHNICAL CRITERIA (ICC/ANSI A117.1-2009 WITH MN AMENDMENTS) 37

CHAPTER 1 APPLICATION AND ADMINISTRATION 37

Section

101 Purpose 37
102 Anthropometric Provisions 37
103 Compliance Alternatives 37
104 Conventions 37
105 Referenced Documents 37
106 Definitions 39

CHAPTER 2 SCOPING 41

Section

201 General 41
202 Dwelling and Sleeping Units 41
203 Administration (Deleted) 41

CHAPTER 3 BUILDING BLOCKS 43

Section

301 General 43
302 Floor Surfaces 43
303 Changes in Level 43
304 Turning Space 44
305 Clear Floor Space 44
306 Knee and Toe Clearance 45
307 Protruding Objects 46
308 Reach Ranges 48
309 Operable Parts 49

INTERNATIONAL CODE COUNCIL®

Copyright © 2014 ICC. ALL RIGHTS RESERVED. Accessed by William Munson on Jan 4, 2017 9:33:41 PM pursuant to License Agreement with ICC. No further reproduction or distribution authorized. ANY UNAUTHORIZED REPRODUCTION OR DISTRIBUTION IS A VIOLATION OF THE FEDERAL COPYRIGHT ACT AND THE LICENSE AGREEMENT, AND SUBJECT TO CIVIL AND CRIMINAL PENALTIES THEREUNDER.

CHAPTER 4 ACCESSIBLE ROUTES 51

Section

401 General 51
402 Accessible Routes. 51
403 Walking Surfaces 51
404 Doors and Doorways 52
405 Ramps 58
406 Curb Ramps 60
407 Elevators 62
408 Limited-Use/Limited-Application Elevators 69
409 Private Residence Elevators 72
410 Platform Lifts 73

CHAPTER 5 GENERAL SITE AND BUILDING ELEMENTS 75

Section

501 General 75
502 Parking Spaces 75
503 Passenger Loading Zones 76
504 Stairways 77
505 Handrails. 77
506 Windows. 79

CHAPTER 6 PLUMBING ELEMENTS AND FACILITIES 81

Section

601 General 81
602 Drinking Fountains 81
603 Toilet and Bathing Rooms 82
604 Water Closets and Toilet Compartments 82
605 Urinals 89
606 Lavatories and Sinks. 89
607 Bathtubs 90
608 Shower Compartments 92
609 Grab Bars 94
610 Seats 96
611 Washing Machines and Clothes Dryers 98
612 Saunas and Steam Rooms. 98

CHAPTER 7 COMMUNICATION ELEMENTS AND FEATURES 101

Section

701 General 101
702 Alarms 101
703 Signs 101
704 Telephones 108
705 Detectable Warnings 109
706 Assistive Listening Systems 109
707 Automatic Teller Machines (ATMS) and Fare Machines 110
708 Two-Way Communication Systems 111

CHAPTER 8 SPECIAL ROOMS AND SPACES . . 113

Section

801 General 113
802 Assembly Areas 113
803 Dressing, Fitting, and Locker Rooms 117
804 Kitchens and Kitchenettes 117
805 Transportation Facilities 118
806 Holding Cells and Housing Cells. 120
807 Courtrooms 121

CHAPTER 9 BUILT-IN FURNISHINGS AND EQUIPMENT 123

Section

901 General 123
902 Dining Surfaces and Work Surfaces 123
903 Benches 123
904 Sales and Service Counters 123
905 Storage Facilities 125

CHAPTER 10 DWELLING UNITS AND SLEEPING UNITS 127

Section

1001 General 127
1002 Accessible Units. 127
1003 Type A Units 128
1004 Type B Units 134
1005 Type C (Visitable) Units 140
1006 Units with Accessible Communication Features 141

CHAPTER 11 RECREATIONAL FACILITIES . . . 143

Section

1101 General 143
1102 Amusement Rides 143
1103 Recreational Boating Facilities 144
1104 Exercise Machines and Equipment 148
1105 Fishing Piers and Platforms 148
1106 Golf Facilities. 148
1107 Miniature Golf Facilities 149

INTERNATIONAL CODE COUNCIL®

Copyright © 2014 ICC. ALL RIGHTS RESERVED. Accessed by William Munson on Jan 4, 2017 9:33:41 PM pursuant to License Agreement with ICC. No further reproduction or distribution authorized. ANY UNAUTHORIZED REPRODUCTION OR DISTRIBUTION IS A VIOLATION OF THE FEDERAL COPYRIGHT ACT AND THE LICENSE AGREEMENT, AND SUBJECT TO CIVIL AND CRIMINAL PENALTIES THEREUNDER.

1108 Play Areas. 149
1109 Swimming Pools, Wading Pools, Hot Tubs and Spas 153
1110 Shooting Facilities with Firing Positions 157

INTERNATIONAL CODE COUNCIL®
Copyright © 2014 ICC. ALL RIGHTS RESERVED. Accessed by William Munson on Jan 4, 2017 9:33:41 PM pursuant to License Agreement with ICC. No further reproduction or distribution authorized. ANY UNAUTHORIZED REPRODUCTION OR DISTRIBUTION IS A VIOLATION OF THE FEDERAL COPYRIGHT ACT AND THE LICENSE AGREEMENT, AND SUBJECT TO CIVIL AND CRIMINAL PENALTIES THEREUNDER.

INTERNATIONAL CODE COUNCIL®
Copyright © 2014 ICC. ALL RIGHTS RESERVED. Accessed by William Munson on Jan 4, 2017 9:33:41 PM pursuant to License Agreement with ICC. No further reproduction or distribution authorized. ANY UNAUTHORIZED REPRODUCTION OR DISTRIBUTION IS A VIOLATION OF THE FEDERAL COPYRIGHT ACT AND THE LICENSE AGREEMENT, AND SUBJECT TO CIVIL AND CRIMINAL PENALTIES THEREUNDER.

2015 MINNESOTA BUILDING CODE ADMINISTRATION

1300.0010 ADMINISTRATION

Subpart 1. Scope. This chapter provides administrative provisions for all *Minnesota State Building Code* rule chapters identified in part 1300.0050. If specific administrative provisions are provided in a statute or rule chapter, the specific administrative provisions apply.

Subp. 2. Minnesota Electrical Act. Chapter 1315 shall be administered according to Chapter 3801 and the Minnesota Electrical Act, Minnesota Statutes, Sections 326B.31 to 326B.399. Provisions of this chapter that do not conflict with the Minnesota Electrical Act also apply.

Subp. 3. Minnesota Plumbing Code. Chapter 4715, the *Minnesota Plumbing Code*, and applicable provisions of this chapter shall be administered and enforced statewide by the commissioner under Minnesota Statutes, Section 326B.106, subdivision 3, unless an agreement exists between the commissioner and a municipality to enforce the *Minnesota Plumbing Code* under Minnesota Statutes, Section 326B.43, subdivision 2.

1300.0020 TITLE

The chapters listed in part 1300.0050, including the standards they adopt by reference, are the *Minnesota State Building Code* and may be cited as or referred to as the "code."

1300.0030 PURPOSE AND APPLICATION

Subpart 1. Purpose. The purpose of this code is to establish minimum requirements to safeguard the public health, safety, and general welfare through structural strength, means of egress facilities, stability, sanitation, adequate light and ventilation, energy conservation, and safety to life and property from fire and other hazards attributed to the built environment and to provide safety to firefighters and emergency responders during emergency operations.

The purpose of the code is not to create, establish, or designate a particular class or group of persons who will or should be especially protected or benefited by the terms of the code.

Subp. 2. Application.

A. The *State Building Code* is the standard that applies statewide for the construction, reconstruction, alteration, and repair of buildings and other structures of the type governed by the code, except as provided in Minnesota Statutes, Section 326B.121.

The *State Building Code* supersedes the building code of any municipality. The *State Building Code* does not apply to agricultural buildings except with respect to state inspections required or rulemaking authorized by Minnesota Statutes, Sections 103F.141, 326B.36, and 326B.121, subdivision 1, paragraph (c), clause (2).

B. The codes and standards referenced in a rule chapter are considered part of the requirements of the code to the prescribed extent of each reference. If differences occur between provisions of the code and referenced codes and standards, the provisions of the code apply.

C. In the event that a new edition of the code is adopted after a permit has been issued, the edition of the code current at the time of permit application shall remain in effect throughout the work authorized by the permit.

1300.0040 SCOPE

Subpart 1. Applicability. The code applies to the design, construction, addition, alteration, moving, replacement, demolition, repair, equipment, installation, use and occupancy, location, maintenance, and inspection of any building, structure, or building service equipment in a municipality, except work located primarily in a public way, public utility towers and poles, mechanical equipment not specifically regulated in the code, and hydraulic flood control structures.

Exception: When approved by the building official, buildings, structures, or portions thereof, used exclusively by military personnel, police, fire, or first responders for training purposes may be designed to reflect actual conditions that may be encountered in field operations, maneuvers, or tactics, however, structural provisions must apply.

Subp. 2. Compliance. Structures classified under part 1300.0070, subpart 12b, as IRC-1, IRC-2, IRC-3, and IRC-4 occupancies not more than three stories above grade plane in height with a separate means of egress shall comply with Chapter 1309 and other applicable rules. Other buildings and structures and appurtenances connected or attached to them shall comply with Chapter 1305 and other applicable rules.

Exception: The following structures that meet the scope of Chapter 1305 shall be permitted to be designed to comply with Minnesota Rules, Chapter 1311:

(1) existing buildings undergoing repair, alteration, change of occupancy, addition, or being moved; and

(2) historic buildings.

If different provisions of the code specify different materials, methods of construction, or other requirements, the most restrictive provision governs. If there is a conflict between a general requirement and a specific requirement, the specific requirement applies.

If reference is made in the code to an appendix, the provisions in the appendix do not apply unless specifically adopted by the code. Optional appendix chapters of the code identified in part 1300.0060 do not apply unless a municipality has specifically adopted them.

INTERNATIONAL CODE COUNCIL®
Copyright © 2014 ICC. ALL RIGHTS RESERVED. Accessed by William Munson on Jan 4, 2017 9:33:41 PM pursuant to License Agreement with ICC. No further reproduction or distribution authorized. ANY UNAUTHORIZED REPRODUCTION OR DISTRIBUTION IS A VIOLATION OF THE FEDERAL COPYRIGHT ACT AND THE LICENSE AGREEMENT, AND SUBJECT TO CIVIL AND CRIMINAL PENALTIES THEREUNDER.

1300.0050 CHAPTERS OF MINNESOTA STATE BUILDING CODE

The *Minnesota State Building Code* adopted under Minnesota Statutes, Section 326B.106, subdivision 1, includes the following chapters:

A. 1300, Minnesota Building Code Administration;

B. 1301, Building Official Certification;

C. 1302, State Building Code Construction Approvals;

D. 1303, Special Provisions;

E. 1305, Minnesota Building Code;

F. 1306, Special Fire Protection Systems;

G. 1307, Elevators and Related Devices;

H. 1309, Minnesota Residential Code;

I. 1311, Minnesota Conservation Code for Existing Buildings;

J. 1315, Minnesota Electrical Code;

K. 1325, Solar Energy Systems;

L. 1335, Floodproofing Regulations;

M. 1341, Minnesota Accessibility Code;

N. 1346, Minnesota Mechanical Code;

O. 1350, Manufactured Homes;

P. 1360, Prefabricated Structures;

Q. 1361, Industrialized/Modular Buildings;

R. 1370, Storm Shelters (Manufactured Home Parks);

S. 4715, Minnesota Plumbing Code;

T. 1322 and 1323, Minnesota Energy Codes; and

U. 5230, Minnesota High Pressure Piping Systems.

1300.0060 OPTIONAL ADMINISTRATION

The following chapters of the code are not mandatory but may be adopted without change by a municipality which has adopted the code:

A. Chapter 1306, Special Fire Protection Systems; and

B. grading, IBC Appendix Chapter J.

1300.0070 DEFINITIONS

Subpart 1. Scope; incorporation by reference. The definitions in this part apply to parts 1300.0010 to 1300.0250. For terms that are not defined through the methods authorized by this chapter, the Merriam-Webster Collegiate Dictionary, available at www.m-w.com, shall be considered as providing ordinarily accepted meanings. The dictionary is incorporated by reference, is subject to frequent change, and is available through the Minitex interlibrary loan system.

Subp. 2. Administrative authority. "Administrative authority" means a municipality's governing body or its assigned administrative authority.

Subp. 3. (Repealed).

Subp. 4. Agricultural building. "Agricultural building" means a building that meets the requirements of Minnesota Statutes, Section 326B.103, subdivision 3.

Subp. 4a. Approved. "Approved" means approval by the building official, pursuant to the *Minnesota State Building Code*, by reason of:

A. inspection, investigation, or testing;

B. accepted principles;

C. computer simulations;

D. research reports; or

E. testing performed by either a licensed engineer or by a locally or nationally recognized testing laboratory.

Subp. 5. Building official. "Building official" means the municipal building code official certified under Minnesota Statutes, Section 326B.133, subdivisions 2 and 3.

Subp. 6. Building service equipment. "Building service equipment" refers to the plumbing, mechanical, electrical, and elevator equipment, including piping, wiring, fixtures, and other accessories, that provides sanitation, lighting, heating, ventilation, cooling, refrigeration, firefighting, and transportation facilities essential to the occupancy of the building or structure for its designated use and occupancy.

Subp. 7. City. "City" means a home rule charter or statutory city.

Subp. 8. Code. For the purposes of Chapter 1300, "Code" means the *Minnesota State Building Code* adopted under Minnesota Statutes, Section 326B.106, subdivision 1, and includes the chapters identified in part 1300.0020.

Subp. 9. Commissioner. "Commissioner" means the commissioner of labor and industry.

Subp. 10. Designate. "Designate" means the formal designation by a municipality's administrative authority of a certified building official accepting responsibility for code administration.

Subp. 11. (Repealed).

Subp. 12a. Historical building. "Historical building" means any building or structure that is listed in the National Register of Historic Places, designated as a historic property under local or state designation law; certified as a contributing resource within a National Register listed or locally designated historic district; or with an opinion or certification that the property is eligible to be listed on the National or State Register of Historic Places either individually or as a contributing building to a historic district by the State Historic Preservation Officer or the Keeper of the National Register of Historic Places.

Subp. 12b. *International Residential Code* occupancy classifications. *International Residential Code* (IRC) occupancy classifications are as follows:

IRC-1 single-family dwellings;
IRC-2 two-family dwellings;
IRC-3 townhouses; and
IRC-4 accessory structures:

INTERNATIONAL CODE COUNCIL®
Copyright © 2014 ICC. ALL RIGHTS RESERVED. Accessed by William Munson on Jan 4, 2017 9:33:41 PM pursuant to License Agreement with ICC. No further reproduction or distribution authorized. ANY UNAUTHORIZED REPRODUCTION OR DISTRIBUTION IS A VIOLATION OF THE FEDERAL COPYRIGHT ACT AND THE LICENSE AGREEMENT, AND SUBJECT TO CIVIL AND CRIMINAL PENALTIES THEREUNDER.

A. garages;
B. storage sheds; and
C. similar structures.

Subp. 13. Mandatory terms. "Mandatory terms" include "must" and "shall," which have the same meaning.

Subp. 14. Manufactured home. "Manufactured home" has the meaning given in Minnesota Statutes, Section 327.31, subdivision 3, and for the purpose of determining occupancy separations, is considered a Group IRC-1 occupancy.

Subp. 15. Master plan. "Master plan" is a plan that has been reviewed for code compliance by the building official and stamped "Reviewed for Code Compliance."

Subp. 16. Mayor and city council. "Mayor" and "city council" mean governing body whenever they appear in the code.

Subp. 17. Municipality. "Municipality" means a city, county, or town; the University of Minnesota; or the state of Minnesota for public buildings and state licensed facilities.

Subp. 18. (Repealed).

Subp. 19. Performance-based design. An engineering approach to design elements of a building based on agreed upon performance goals and objectives, engineering analysis, and quantitative assessment of alternatives against the design goals and objectives, using accepted engineering tools, methodologies, and performance criteria.

Subp. 20. Recyclable materials. "Recyclable materials" means materials that are separated from mixed municipal solid waste for the purpose of recycling, including paper, glass, plastic, metals, automobile oil, and batteries. Refuse-derived fuel or other material that is destroyed by incineration is not a recyclable material.

Subp. 21. Recycling. "Recycling" means the process of collecting and preparing recyclable materials and reusing the materials in their original form or using them in manufacturing processes that do not cause the destruction of recyclable materials in a manner that precludes further use.

Subp. 22. (Repealed).

Subp. 23. (Repealed).

Subp. 24. State building official. "State building official" means the person who, under the direction and supervision of the commissioner, administers the code.

Subp. 25. State licensed facilities. "State licensed facilities" means, pursuant to Minnesota Statutes, Section 326B.103, subdivision 13, a building and its grounds that are licensed by the state as a hospital, nursing home, supervised living facility, free-standing outpatient surgical center, correctional facility, boarding care home, or residential hospice.

Subp. 26. State-owned buildings. "State-owned buildings" means buildings and structures financed in whole or in part by state funds that are under the exclusive jurisdiction and custodial control of one or more state department or agency.

1300.0080
CODE ADOPTION AND AMENDMENTS

Under Minnesota Statutes, Section 326B.106, the code is adopted and periodically updated to include current editions of national model codes in general use and existing statewide specialty codes and their amendments.

Under Minnesota Statutes, Section 326B.13, subdivisions 5 and 6, amendments to the code may be proposed and initiated by any interested person. Proposed amendments must be submitted in writing on a form provided by the commissioner.

1300.0090
DEPARTMENT OF BUILDING SAFETY

Subpart 1. Creation of enforcement agency. There is hereby established in the municipality a code enforcement agency and the official in charge is the designated building official. The agency is referred to in the code as the "Department of Building Safety."

Subp. 2. Appointment. The building official shall be designated by the municipality according to Minnesota Statutes, Section 326B.133.

1300.0110
DUTIES AND POWERS OF BUILDING OFFICIAL

Subpart 1. General. The building official is authorized and directed to enforce the provisions of this code. The building official has the authority to render interpretations of the code and adopt policies and procedures in order to clarify the application of the provisions. The interpretations, policies, and procedures shall comply with the intent and purpose of the code. The policies and procedures shall not have the effect of waiving requirements specifically provided for in the code.

Subp. 2. Deputies. According to the prescribed procedures of the municipality and with the concurrence of the appointing authority, the building official may designate a deputy building official and related technical officers, inspectors, plan examiners, and other employees. The employees have the powers delegated by the building official.

Subp. 3. Applications and permits. The building official shall receive applications, review construction documents, and issue permits for the erection, alteration, demolition, moving, and repair of buildings and structures, including all other equipment and systems regulated by the code. When requested by a permit applicant, the building official shall meet with the permit applicant prior to the application for a construction permit to discuss plans for the proposed work. The meeting shall be held at a mutually agreeable location. Municipalities may establish a fee for this service.

Subp. 4. Notices and orders. The building official shall issue all necessary notices and orders to ensure compliance

INTERNATIONAL CODE COUNCIL®
Copyright © 2014 ICC. ALL RIGHTS RESERVED. Accessed by William Munson on Jan 4, 2017 9:33:41 PM pursuant to License Agreement with ICC. No further reproduction or distribution authorized. ANY UNAUTHORIZED REPRODUCTION OR DISTRIBUTION IS A VIOLATION OF THE FEDERAL COPYRIGHT ACT AND THE LICENSE AGREEMENT, AND SUBJECT TO CIVIL AND CRIMINAL PENALTIES THEREUNDER.

with the code. Notices and orders shall be in writing unless waived by the permit applicant, contractor, owner, or owner's agent. Notices and orders shall be based on the edition of the code under which the permit has been issued.

Subp. 5. Inspections. The building official shall make all of the required inspections or accept reports of inspection by approved agencies or individuals. Results of inspections shall be documented on the job site inspection card and in the official records of the municipality, including type of inspection, date of inspection, identification of the responsible individual making the inspection, and comments regarding approval or disapproval of the inspection. The building official is authorized to engage an expert opinion as deemed necessary to report on any unusual technical issues that arise.

Subp. 6. Identification. The building official and deputies shall carry proper identification when inspecting structures or premises in the performance of duties under the code.

Subp. 7. Right of entry. If it is necessary to make an inspection to enforce the code or if the building official has reasonable cause to believe that there exists in a structure or upon a premises a condition contrary to or in violation of the code that makes the structure or premises unsafe, dangerous, or hazardous, the building official or designee may enter the structure or premises at reasonable times to inspect or to perform the duties imposed by the code, provided that if the structure or premises is occupied, credentials must be presented to the occupant and entry requested. If the structure or premises is unoccupied, the building official shall first make a reasonable effort to locate the owner or other person having charge or control of the structure or premises and request entry. If entry is refused, the building official shall have recourse to the remedies provided by law to secure entry.

Subp. 8. Department records. The building official shall be responsible for official records of the local Department of Building Safety for permit applications received, plans, specifications, surveys, plot plans, plan reviews, permits and certificates issued, reports of inspections, and notices and orders issued by the department. The records shall be kept according to the records management schedule of the municipality required by Minnesota Statutes, Section 138.17.

Subp. 9. Liability. The building official, member of the Board of Appeals, or employee charged with the enforcement of the code, while acting for the jurisdiction in good faith and without malice in the discharge of the duties required by the code or other pertinent laws or ordinances, is not rendered personally liable and is relieved from personal liability for any damage accruing to persons or property as a result of any act or by reason of an act or omission in the discharge of official duties. Any suit instituted against an officer or employee because of an act performed by that officer or employee in the lawful discharge of duties and under the code shall be defended by the legal representative of the jurisdiction until the final termination of the proceedings. The building official, member of the Board of Appeals, or an employee charged with the enforcement of the code, is not liable for costs in any action, suit, or proceeding that is instituted in pursuance of the provisions of this code.

Subp. 10. Approved materials and equipment. Materials, equipment, and devices approved by the building official shall be constructed and installed in the approved manner.

Subp. 11. Used material and equipment. The use of used materials that meet the requirements of the code for new materials is permitted. Used equipment and devices shall not be reused unless approved by the building official.

Subp. 12. Modifications. If there are practical difficulties involved in carrying out the provisions of the code, the building official may grant modifications for individual cases, upon application by the owner or owner's representative, provided the building official finds that special individual reason makes the strict letter of the code impractical, the modification is in compliance with the intent and purpose of the code, and the modification does not lessen health, life, and fire safety or structural requirements. The details of action granting modifications shall be recorded and entered in the files of the Department of Building Safety.

Subp. 13. Alternative materials, design, and methods of construction and equipment. The code is not intended to prevent the installation of any material or to prohibit any design or method of construction not specifically prescribed by the code, provided that any alternative has been approved. An alternative material, design, or method of construction shall be approved where the building official finds that the proposed design is satisfactory and complies with the intent of the code, and that the material, method, or work offered is, for the purpose intended, at least the equivalent of that prescribed in the code in quality, strength, effectiveness, fire resistance, durability, and safety. The details of any action granting approval of an alternate shall be recorded and entered in the files of the Department of Building Safety.

Subp. 14. Performance-based fire and life safety design. The code official may approve performance-based fire and life safety designs if the code official finds that the proposed design has been conducted by an approved method. Approved performance-based designs are evidence of compliance with the intent of the code. Approvals under this subpart are subject to the approval of the building code official whenever the design involves matters regulated by the building code.

A. Design goals, objectives, and performance criteria shall be approved by the code official before submission of a performance-based design report, calculations, or analysis results. As a minimum, an approved performance-based design shall address the following objectives:

   (1) life safety of occupants;

   (2) firefighter safety;

   (3) property protection;

   (4) continuity of operations; and

   (5) safeguarding of the environment.

B. To determine the acceptability of a performance-based design, the code official may require the owner or agent to provide, without charge to the jurisdiction, a technical opinion and report. The code official may require

INTERNATIONAL CODE COUNCIL®
Copyright © 2014 ICC. ALL RIGHTS RESERVED. Accessed by William Munson on Jan 4, 2017 9:33:41 PM pursuant to License Agreement with ICC. No further reproduction or distribution authorized. ANY UNAUTHORIZED REPRODUCTION OR DISTRIBUTION IS A VIOLATION OF THE FEDERAL COPYRIGHT ACT AND THE LICENSE AGREEMENT, AND SUBJECT TO CIVIL AND CRIMINAL PENALTIES THEREUNDER.

the technical opinion and report to be prepared by, and bear the stamp of, a licensed design professional.

C. Performance-based designs shall be prepared by, and bear the stamp of, a licensed design professional competent in the area of work. The design professional shall provide written confirmation to the code official before a certificate of occupancy is issued that the performance-based design has been properly implemented, the operation or use of the building is within the limitations of the design, and adequate controls are in place to maintain compliance with the conditions of the design throughout the life of the building.

Subp. 15. Tests. If there is insufficient evidence of compliance with the code, or evidence that a material or method does not conform to the requirements of the code, or in order to substantiate claims for alternative materials or methods, the building official shall have the authority to require tests as evidence of compliance to be made at no expense to the municipality. Test methods shall be as specified in the code or by other recognized test standards. In the absence of recognized and accepted test methods, the building official shall approve the testing procedures. Tests shall be performed by an approved agency. Reports of the tests shall be retained by the building official.

1300.0120 PERMITS

Subpart 1. Required. An owner or authorized agent who intends to construct, enlarge, alter, repair, move, demolish, or change the occupancy of a building or structure, or to erect, install, enlarge, alter, repair, remove, convert, or replace any gas, mechanical, electrical, plumbing system, or other equipment, the installation of which is regulated by the code; or cause any such work to be done, shall first make application to the building official and obtain the required permit.

Subp. 2. Annual permit. In lieu of an individual permit for each alteration to an already approved electrical, gas, mechanical, or plumbing installation, the building official may issue an annual permit upon application for the permit to any person, firm, or corporation regularly employing one or more qualified trade persons in the building, structure, or on the premises owned or operated by the applicant for the permit.

Subp. 3. Annual permit records. The person to whom an annual permit is issued shall keep a detailed record of alterations made under the annual permit. The building official shall have access to the records at all times or the records shall be filed with the building official as designated.

Subp. 4. Work exempt from permit. Exemptions from permit requirements of the code do not authorize work to be done in any manner in violation of the code or any other laws or ordinances of this jurisdiction. Permits shall not be required for the following:

A. Building:

(1) One-story detached accessory structures used as tool and storage sheds, playhouses, and similar uses, provided the floor area does not exceed 200 square feet (60 960 mm^2);

(2) Fences not over seven feet (2134 mm) high;

(3) Oil derricks;

(4) Retaining walls that are not over four feet (1219 mm) in height measured from the bottom of the footing to the top of the wall, unless supporting a surcharge or impounding Class I, II, or III-A liquids;

(5) Water tanks supported directly upon grade if the capacity does not exceed 5,000 gallons (18 927 L) and the ratio of height to diameter or width does not exceed 2 to 1;

(6) Sidewalks and driveways that are not part of an accessible route;

(7) Decks and platforms not more than 30 inches (762 mm) above adjacent grade and not attached to a structure with frost footings and which is not part of an accessible route;

(8) Painting, papering, tiling, carpeting, cabinets, countertops, and similar finish work;

(9) Temporary motion picture, television, and theater stage sets and scenery;

(10) Prefabricated swimming pools installed entirely above ground accessory to dwelling units constructed to the provisions of the *International Residential Code* or R-3 occupancies constructed to the provisions of the *International Building Code,* which do not exceed both 5,000 gallons in capacity (18 925 L) and a 24-inch (610 mm) depth;

(11) Window awnings supported by an exterior wall that do not project more than 54 inches (1372 mm) from the exterior wall and do not require additional support, when constructed under the *International Residential Code* or Group R-3 and Group U occupancies constructed to the provisions of the *International Building Code*;

(12) Movable cases, counters, and partitions not over five feet, nine inches (1753 mm) in height; and

(13) Swings and other playground equipment.

Unless otherwise exempted, plumbing, electrical, and mechanical permits are required for subitems (1) to (13).

B. Gas:

(1) Portable heating, cooking, or clothes drying appliances;

(2) Replacement of any minor part that does not alter approval of equipment or make the equipment unsafe; and

(3) Portable fuel cell appliances that are not connected to a fixed piping system and are interconnected to a power grid.

C. Mechanical:

(1) Portable heating appliances;

INTERNATIONAL CODE COUNCIL®
Copyright © 2014 ICC. ALL RIGHTS RESERVED. Accessed by William Munson on Jan 4, 2017 9:33:41 PM pursuant to License Agreement with ICC. No further reproduction or distribution authorized. ANY UNAUTHORIZED REPRODUCTION OR DISTRIBUTION IS A VIOLATION OF THE FEDERAL COPYRIGHT ACT AND THE LICENSE AGREEMENT, AND SUBJECT TO CIVIL AND CRIMINAL PENALTIES THEREUNDER.

(2) Portable ventilation appliances and equipment;

(3) Portable cooling units;

(4) Steam, hot, or chilled water piping within any heating or cooling equipment regulated by this code;

(5) Replacement of any part that does not alter approval of equipment or make the equipment unsafe;

(6) Portable evaporative coolers;

(7) Self-contained refrigeration systems containing ten pounds (4.5 kg) or less of refrigerant or that are actuated by motors of one horsepower (0.75 kW) or less; and

(8) Portable fuel cell appliances that are not connected to a fixed piping system and are not interconnected to a power grid.

D. Electrical: a municipality must not require an electrical permit if the work falls under the jurisdiction of the commissioner or if the work is exempt from inspection under Minnesota Statutes, Section 326B.36, subdivision 7. This exemption does not exempt the work from other *State Building Code* requirements relating to electrical equipment.

Subp. 5. Emergency repairs. If equipment replacements and repairs must be performed in an emergency situation, the permit application shall be submitted to the building official within the next working business day.

Subp. 6. Repairs. Application or notice to the building official is not required for ordinary repairs to structures. The repairs shall not include the opening or removal of any wall, partition, or portion of a wall or partition, the removal or cutting of any structural beam or load bearing support, or the removal or change of any required means of egress, or rearrangement of parts of a structure affecting the egress requirements; nor shall ordinary repairs include addition to, alteration of, replacement, or relocation of any standpipe, water supply, sewer, drainage, drain leader, gas, soil, waste, vent or similar piping, electric wiring, or mechanical or other work affecting public health or general safety.

Subp. 7. Application for permit. To obtain a permit, the applicant shall file an application in writing on a form furnished by the Department of Building Safety for that purpose. The application shall:

A. Identify and describe the work to be covered by the permit for which application is made;

B. Describe the land on which the proposed work is to be done by legal description, street address, or similar description that will readily identify and definitely locate the proposed building or work;

C. Indicate the use and occupancy for which the proposed work is intended;

D. Indicate the type of construction;

E. Be accompanied by construction documents and other information as required by the code;

F. State the valuation of the proposed work;

G. Be signed by the applicant, or the applicant's authorized agent; and

H. Give other data and information required by the building official.

Subp. 8. Action on application. The building official shall examine or cause to be examined applications for permits and amendments within a reasonable time after filing. If the application or the construction documents do not conform to the requirements of pertinent laws, the building official shall reject the application and notify the applicant of the reasons. The building official shall document the reasons for rejecting the application. The applicant may request written documentation of the rejection and the reasons for the rejection. When the building official is satisfied that the proposed work conforms to the requirements of the code and applicable laws and ordinances, the building official shall issue a permit.

Subp. 9. Time limitation of application. An application for a permit for any proposed work shall be considered abandoned 180 days after the date of filing, unless the application has been pursued in good faith or a permit has been issued; except that the building official is authorized to grant one or more extensions of time for additional periods not exceeding 180 days each. The extension shall be requested in writing and justifiable cause demonstrated.

Subp. 10. Validity of permit. The issuance or granting of a permit or approval of plans, specifications, and computations, shall not be construed to be a permit for any violation of the code or of any other ordinance of the jurisdiction. Permits presuming to give authority to violate or cancel the provisions of the code or other ordinances of the jurisdiction are not valid. Any permit issued becomes invalid if the work authorized by the permit is suspended or abandoned for more than 180 days. The 180 days commences the first day the work was suspended or abandoned.

Subp. 11. Expiration. Every permit issued expires unless the work authorized by the permit is commenced within 180 days after its issuance. The building official shall grant, in writing, extensions of time, for periods not more than 180 days each if the applicant demonstrates justifiable cause for the extension to the building official.

Subp. 12. Suspension or revocation. The building official may suspend or revoke a permit issued under the code if the permit is issued in error; on the basis of incorrect, inaccurate, or incomplete information; or in violation of any ordinance or regulation or the code.

Subp. 13. Information and placement of permit. The building permit or a copy shall be kept on the site of the work until the completion of the project. Pursuant to Minnesota Statutes, Section 15.41, the permit shall specify the name and address of the applicant, and the general contractor, if one exists. All construction permits shall be posted in a conspicuous and accessible place at the premises or site of construction.

Subp. 14. Responsibility. Every person who performs work for the installation or repair of building, structure, electrical, gas, mechanical, or plumbing systems, for which the code is applicable, shall comply with the code. The person, firm, or

INTERNATIONAL CODE COUNCIL®
Copyright © 2014 ICC. ALL RIGHTS RESERVED. Accessed by William Munson on Jan 4, 2017 9:33:41 PM pursuant to License Agreement with ICC. No further reproduction or distribution authorized. ANY UNAUTHORIZED REPRODUCTION OR DISTRIBUTION IS A VIOLATION OF THE FEDERAL COPYRIGHT ACT AND THE LICENSE AGREEMENT, AND SUBJECT TO CIVIL AND CRIMINAL PENALTIES THEREUNDER.

organization securing the permit is responsible for code compliance for the work being performed.

1300.0130 CONSTRUCTION DOCUMENTS

Subpart 1. Submittal documents. Construction documents, special inspection and structural observation programs, and other data shall be submitted in one or more sets with each application for a permit.

Exception: The building official may waive the submission of construction documents and other data if the nature of the work applied for is such that reviewing of construction documents is not necessary to obtain compliance with the code.

The building official may require plans or other data be prepared according to the rules of the Board of Architecture, Engineering, Land Surveying, Landscape Architecture, Geoscience and Interior Design, Chapter 1800, and Minnesota Statutes, Sections 326.02 to 326.15, and other state laws relating to plan and specification preparation by occupational licenses. If special conditions exist, the building official may require additional construction documents to be prepared by a licensed design professional.

Subp. 2. Information on construction documents. Construction documents shall be dimensioned and drawn upon suitable material. Electronic media documents are permitted to be submitted when approved by the building official. Construction documents shall be of sufficient clarity to indicate the location, nature, and extent of the work proposed and show in detail that it will conform to the code and relevant laws, ordinances, rules, and regulations, as determined by the building official.

Subp. 3. Manufacturer's installation instructions. When required by the building official, manufacturer's installation instructions for construction equipment and components regulated by the code, shall be available on the job site at the time of inspection.

Subp. 4. Site plan. The construction documents submitted with the application for permit shall be accompanied by a site plan drawn to scale, showing the size and location of new construction and existing structures on the site, distances from lot lines, the established street grades, and the proposed finished grades, and it shall be drawn according to an accurate boundary line survey. In the case of demolition, the site plan shall show construction to be demolished and the location and size of existing structures and construction that are to remain on the site or plot. The building official may waive or modify the requirement for a site plan if the application for permit is for alteration or repair or when otherwise warranted.

Subp. 5. Examination of documents. The building official shall examine or cause to be examined the accompanying construction documents to ascertain whether the construction indicated and described complies with the requirements of the code and other pertinent laws and ordinances.

Subp. 6. Approval of construction documents.

A. If the building official issues a permit, the construction documents shall be approved in writing or by a stamp, stating "Reviewed for Code Compliance," dated, and signed by the building official or an authorized representative. One set of the construction documents that were reviewed shall be retained by the building official. The other set shall be returned to the applicant, kept at the site of the work, and open to inspection by the building official or an authorized representative.

B. Any code deficiencies identified by the building official during the plan review process for construction documents that are prepared by a design professional who is licensed or certified under Minnesota Statutes, Sections 326.02 to 326.15, must be itemized by the building official through a comprehensive plan review letter only. Any code deficiencies identified by the building official during the plan review process for construction documents that are not prepared by a licensed or certified design professional may be marked directly on the document or itemized by the building official through a comprehensive plan review letter. The issuance of a permit based on construction documents and other data does not prevent the building official from requiring the correction of errors in the construction documents and other data. All sets of required construction documents, including the site copy, municipality copy, or inspector copy, must be marked identically by the building official, with one copy retained by the building official after construction is completed. Work regulated by the code must be installed according to the reviewed construction documents. Work that does not comply with approved construction documents must not precede until the applicant submits changes that are approved by the building official.

Subp. 7. Previous approvals. The code in effect at the time of application shall be applicable.

Subp. 8. Phased approval. The building official may issue a permit for the construction of foundations or any other part of a building or structure before the construction documents for the whole building or structure have been submitted, provided that adequate information and detailed statements have been filed complying with pertinent requirements of the code. The holder of the permit for the foundation or other parts of a building or structure shall proceed at the holder's own risk with the building operation and without assurance that a permit for the entire structure will be granted.

Subp. 9. Design professional in responsible charge.

A. The building official may require the owner to engage and designate on the building permit application a licensed design professional who shall act as the licensed design professional in responsible charge. If the circumstances require, the owner shall designate a substitute licensed design professional in responsible charge who shall perform the duties required of the

INTERNATIONAL CODE COUNCIL®
Copyright © 2014 ICC. ALL RIGHTS RESERVED. Accessed by William Munson on Jan 4, 2017 9:33:41 PM pursuant to License Agreement with ICC. No further reproduction or distribution authorized. ANY UNAUTHORIZED REPRODUCTION OR DISTRIBUTION IS A VIOLATION OF THE FEDERAL COPYRIGHT ACT AND THE LICENSE AGREEMENT, AND SUBJECT TO CIVIL AND CRIMINAL PENALTIES THEREUNDER.

original licensed design professional in responsible charge. The building official shall be notified in writing by the owner if the licensed design professional in responsible charge is changed or is unable to continue to perform the duties.

The licensed design professional in responsible charge shall be responsible for reviewing and coordinating submittal documents prepared by others, including phased and deferred submittal items, for compatibility with the design of the building.

When structural observation is required by the code, the inspection program shall name the individual or firms who are to perform structural observation and describe the stages of construction at which structural observation is to occur.

B. For the purposes of this part, deferred submittals are defined as those portions of the design that are not submitted at the time of the application and that are to be submitted to the building official within a specified period.

Deferral of any submittal items shall have the prior approval of the building official. The licensed design professional in responsible charge shall list the deferred submittals on the construction documents for review by the building official.

Submittal documents for deferred submittal items shall be submitted to the licensed design professional in responsible charge who shall review them and forward them to the building official with a notation indicating that the deferred submittal documents have been reviewed and that they have been found to be in general conformance with the design of the building. The deferred submittal items shall not be installed until their design and submittal documents have been approved by the building official.

C. Work regulated by the code shall be installed according to the reviewed construction documents, and any changes made during construction that are not in compliance with the approved construction documents shall be resubmitted for approval as an amended set of construction documents.

1300.0140 VIOLATIONS

It is unlawful for any person, firm, or corporation to erect, construct, alter, extend, repair, move, remove, demolish, or occupy any building, structure, or equipment regulated by the code, or cause any of those actions, in conflict with or in violation of the code. The building official may serve a notice of violation or order on the person responsible for the erection, construction, alteration, extension, repair, moving, removal, demolition, or occupancy of a building or structure in violation of the code, or in violation of a permit or certificate issued under the code. The order shall direct the discontinuance of the illegal action or condition and the abatement of the violation.

1300.0150 VIOLATIONS, PENALTY

A violation of the code is a misdemeanor under Minnesota Statutes, Section 326B.082.

1300.0160 FEES

Subpart 1. Schedule of permit fees. The applicant for a permit for a building; structure; or electrical, gas, mechanical, or plumbing system or alterations requiring a permit shall pay the fee set forth by a fee schedule adopted by the municipality.

When submittal documents are required to be submitted by this chapter, a plan review fee shall be required. The plan review fee shall be established by the fee schedule adopted by the municipality.

Exception: The fee schedule adopted by the municipality may exempt minor work from plan review fees.

Subp. 2. Fees commensurate with service. Fees established by the municipality must be by legal means and must be fair, reasonable, and proportionate to the actual cost of the service for which the fee is imposed.

Subp. 3. Building permit valuations. The applicant for a permit shall provide an estimated permit value at time of application. Permit valuations shall include total value of all construction work, including materials and labor, for which the permit is being issued, such as electrical, gas, mechanical, plumbing equipment, and permanent systems. Building permit valuation shall be set by the building official.

Exceptions: Building permit valuations for the following structures shall be based on the valuation of on-site work only:

A. Manufactured homes containing a Housing and Urban Development (HUD) certification label;

B. Prefabricated buildings with a Department of Labor and Industry prefabrication label; and

C. Industrialized/modular buildings with an Industrialized Building Commission (IBC) label.

Subp. 4. Building permit fees. Building permit fees shall be based on valuation.

Exceptions:

A. One- and two-family dwelling maintenance permits for roofing, siding, windows, doors, or other minor projects may be charged a fixed fee; and

B. Permits for plumbing, mechanical, electrical, or other building service equipment systems may be based on valuation or charged a fixed fee.

Subp. 5. Plan review fees for similar plans. When submittal documents for similar plans are approved under subpart 6, plan review fees shall not exceed 25 percent of the normal building permit fee established and charged by the jurisdiction for the same structure.

INTERNATIONAL CODE COUNCIL®
Copyright © 2014 ICC. ALL RIGHTS RESERVED. Accessed by William Munson on Jan 4, 2017 9:33:41 PM pursuant to License Agreement with ICC. No further reproduction or distribution authorized. ANY UNAUTHORIZED REPRODUCTION OR DISTRIBUTION IS A VIOLATION OF THE FEDERAL COPYRIGHT ACT AND THE LICENSE AGREEMENT, AND SUBJECT TO CIVIL AND CRIMINAL PENALTIES THEREUNDER.

Subp. 6. Plan review of similar plans.

A. Any number of similar buildings may be built from a master plan if:

(1) Plan review fees have been paid for the master plan;

(2) A code change has not occurred that impacts the design of a master plan;

(3) The similar building has the same physical dimensions and structural design as the master plan;

Exception: The following modifications to the master plan are not considered to be significant modifications, according to Minnesota Statutes, Section 326B.106, subdivision 1, and are permitted for dwelling units and their accessory structures built to the *International Residential Code*, and residential occupancies built to the *International Building Code* that are three stories or less in height and their accessory structures:

(a) foundation configurations of walkout, lookout, and full basements;

(b) alternate foundation materials approved by the building official;

(c) roof design changed by a revised truss plan approved by the building official; and

(d) other modifications approved by the building official;

(4) occupancy groups other than those identified in the exceptions listed in part 1300.0160, subpart 6, item A, subitem (3), must be the same type of construction and occupancy classification and must have the same exit system;

Exception: Minor changes to the exit access; and

(5) the similar plan is based on a master plan for which the municipality has issued a permit within the last 12 months.

B. Plan review fees for similar building plans must be based on the costs commensurate with the direct and indirect cost of the service, but must not exceed 25 percent of the normal building permit fee established and charged by the municipality for the same structure.

C. The plan review fee charged for similar building plans applies to all buildings regulated by the code regardless of occupancy classification including industrialized/modular buildings constructed under a program specified in Minnesota Statutes, Section 326B.194.

D. The applicant must submit a new plan set and other information as required by the building official for each building reviewed as a similar building.

Subp. 7. Payment of fees. A permit shall not be issued until the fees prescribed by the municipality have been paid.

Subp. 8. Work commencing before permit issuance. If work for which a permit is required by the code has been commenced without first obtaining a permit, a special investigation shall be made before a permit may be issued for the work. An investigation fee established by the municipality shall be collected whether or not a permit is issued and is in addition to the required permit fees, but it may not exceed the permit fee.

Subp. 9. Fee refunds. The municipality shall establish a permit and plan review fee refund policy.

Subp. 10. State surcharge fees. All municipal permits issued for work under the code are subject to a surcharge fee. The fees are established by Minnesota Statutes, Section 326B.148. Reports and remittances by municipalities must be filed with the commissioner.

Surcharge fees imposed by the state are in addition to municipal permit fees. Surcharge report forms and information may be obtained by writing the commissioner.

1300.0170
STOP WORK ORDER

If the building official finds any work regulated by the code being performed in a manner contrary to the provisions of the code or in a dangerous or unsafe manner, the building official is authorized to issue a stop work order or a notice or order pursuant to part 1300.0110, subpart 4.

The stop work order shall be in writing and issued to the owner of the property involved, to the owner's agent, or to the person doing the work. Upon issuance of a stop work order, the cited work shall immediately cease. A person who continues work after having been served with a stop work order, except for work that the person is directed to perform to remove a violation or unsafe condition, is subject to penalties as prescribed by law. The stop work order shall state the reason for the order and the conditions under which the cited work will be permitted to resume.

1300.0180
UNSAFE BUILDINGS OR STRUCTURES

A building or structure regulated by the code is unsafe, for purposes of this part, if it is structurally unsafe, not provided with adequate egress, a fire hazard, or otherwise dangerous to human life.

Building service equipment that is regulated by the code is unsafe, for purposes of this part, if it is a fire, electrical, or health hazard; an unsanitary condition; or otherwise dangerous to human life. Use of a building, structure, or building service equipment constituting a hazard to safety, health, or public welfare by reason of inadequate maintenance, dilapidation, obsolescence, fire hazard, disaster, damage, or abandonment is, for the purposes of this part, an unsafe use. Parapet walls, cornices, spires, towers, tanks, statuary, and other appendages or structural members that are supported by, attached to, or a part of a building and that are in deteriorated condition or otherwise unable to sustain the design loads that are specified in the code are unsafe building appendages.

The building official shall order any building or portion of a building to be vacated if continued use is dangerous to life, health, or safety of the occupants. The building official shall

INTERNATIONAL CODE COUNCIL®
Copyright © 2014 ICC. ALL RIGHTS RESERVED. Accessed by William Munson on Jan 4, 2017 9:33:41 PM pursuant to License Agreement with ICC. No further reproduction or distribution authorized. ANY UNAUTHORIZED REPRODUCTION OR DISTRIBUTION IS A VIOLATION OF THE FEDERAL COPYRIGHT ACT AND THE LICENSE AGREEMENT, AND SUBJECT TO CIVIL AND CRIMINAL PENALTIES THEREUNDER.

have the authority to order, disconnection of utility services to the building, structure, or system, regulated by the code, in case of an emergency to eliminate a hazard to life or property. The order shall be in writing and state the reasons for the action.

All unsafe buildings, structures, or appendages are public nuisances and must be abated by repair, rehabilitation, demolition, or removal according to Minnesota Statutes, Sections 463.15 to 463.26.

1300.0190
TEMPORARY STRUCTURES AND USES

Subpart 1. General. The building official may issue a permit for temporary structures and temporary uses.

Subp. 2. Conformance. Temporary structures and uses shall conform to the structural strength, fire safety, means of egress, accessibility, light, ventilation, and sanitary requirements of the code as necessary to ensure the public health, safety, and general welfare.

Subp. 3. Termination of approval. The building official may terminate the permit for a temporary structure or use and order the temporary structure or use to be discontinued if the conditions required in this part have not been complied with.

1300.0210
INSPECTIONS

Subpart 1. General. Construction or work for which a permit is required is subject to inspection by the building official and the construction or work shall remain accessible and exposed for inspection purposes until approved. Approval as a result of an inspection is not approval of a violation of the code or of other ordinances of the jurisdiction. Inspections presuming to give authority to violate or cancel the provisions of the code or of other ordinances of the jurisdiction are not valid. It shall be the duty of the permit applicant to cause the work to remain accessible and exposed for inspection purposes. Neither the building official nor the jurisdiction is liable for expense entailed in the removal or replacement of any material required to allow inspection.

Subp. 2. Preliminary inspection. Before issuing a permit, the building official may examine, or cause to be examined, buildings, structures, and sites for which an application has been filed.

Subp. 3. Inspection record card. The building official shall identify which inspections are required for the work requiring a permit. Work requiring a permit shall not be commenced until the permit holder or an agent of the permit holder has posted or otherwise made available an inspection record card that allows the building official to conveniently make all required entries regarding inspection of the work. This card shall be maintained and made available by the permit holder until final approval has been granted by the building official.

Subp. 4. Inspection requests. The building official shall provide the applicant with policies, procedures, and a timeline for requesting inspections. The person doing the work authorized by a permit shall notify the building official that the work is ready for inspection. The person requesting an inspection required by the code shall provide access to and means for inspection of the work.

Subp. 5. Approval required. Work shall not be done beyond the point indicated in each successive inspection without first obtaining the approval of the building official. The building official, upon notification, shall make the requested inspections and shall either indicate the portion of the construction that is satisfactory as completed or notify the permit holder or an agent of the permit holder of any failures to comply with the code. Any portion that does not comply shall be corrected and the portion shall not be covered or concealed until authorized by the building official.

Subp. 6. Required inspections. The building official, upon notification, shall make the inspections in this part. In addition to the inspections identified in this subpart, see applicable rule chapters in part 1300.0050 for specific inspection and testing requirements.

A. Footing inspections shall be made after excavations for footings are complete and any required reinforcing steel is in place. Materials for the foundation shall be on the job, except that concrete need not be on the job if the concrete is ready mixed according to approved nationally recognized standards.

B. Foundations:

(1) Foundation inspections for poured walls shall be made after all forms are in place with any required reinforcing steel and bracing in place, and prior to pouring concrete.

(2) All foundation walls shall be inspected prior to backfill for specific code requirements.

(3) The foundation inspection shall include excavations for thickened slabs intended for the support of bearing walls, partitions, structural supports, or equipment.

C. Concrete slab and under-floor inspections shall be made after in-slab or under-floor reinforcing steel and building service equipment, conduit, piping accessories, and other ancillary equipment items are in place, but before any concrete is placed or floor sheathing installed, including the subfloor.

D. Rough-in inspections of plumbing, mechanical, gas, sprinklers, alarms, and electrical systems shall be made before covering or concealment, before fixtures or appliances are set or installed, and before framing inspection.

E. Inspection of framing and masonry construction shall be made after the roof, masonry, framing, firestopping, draftstopping, and bracing are in place and after the plumbing, mechanical, and electrical rough inspections are approved.

F. Energy efficiency inspections shall be made to determine compliance with *Minnesota Energy Code* requirements.

G. Lath and gypsum board inspections shall be made after lathing and gypsum board, interior and exterior, are in

INTERNATIONAL CODE COUNCIL®
Copyright © 2014 ICC. ALL RIGHTS RESERVED. Accessed by William Munson on Jan 4, 2017 9:33:41 PM pursuant to License Agreement with ICC. No further reproduction or distribution authorized. ANY UNAUTHORIZED REPRODUCTION OR DISTRIBUTION IS A VIOLATION OF THE FEDERAL COPYRIGHT ACT AND THE LICENSE AGREEMENT, AND SUBJECT TO CIVIL AND CRIMINAL PENALTIES THEREUNDER.

place, but before any plastering is applied or before gypsum board joints and fasteners are taped and finished.

Exception: Gypsum board that is not part of a fire-resistive assembly or a shear assembly.

H. Protection of joints and penetrations in fire-resistance-rated or smoke-resistance-rated assemblies shall not be concealed from view until inspected and approved.

I. Installation of manufactured homes (mobile homes) shall be made after the installation of the support systems and all utility service connections are in place, but before any covering material or skirting is in place. Evaluation of an approved anchoring system is part of the installation inspection.

J. Fireplaces must be inspected for compliance with applicable requirements of the code and the manufacturer's installation instructions.

K. A final inspection shall be made for all work for which a permit is issued.

L. Special inspections shall be as required by the code.

M. In addition to the inspections in items A to K, the building official is authorized to make or require other inspections of any construction work to ascertain compliance with the code and other laws that are enforced by the Department of Building Safety.

Subp. 7. Inspection agencies. The building official is authorized to accept inspection reports by approved agencies.

1300.0215 PLUMBING

Subpart 1. Inspections, testing, and permits.

A. For purposes of this part, "administrative authority" is defined in part 4715.0010, subpart 2.

B. Except as provided in item C, new plumbing systems or parts of existing plumbing systems that have been altered, extended, or repaired shall be tested and approved by the administrative authority before the plumbing system is put into use. The administrative authority shall perform the final inspection and witness the test. The administrative authority shall approve the plumbing system if the system complies with the requirements of this code, any permit requirements, and the requirements of any plan approved pursuant to subpart 6. Plumbing system tests shall comply with part 4715.2820.

C. Unless the plumbing work poses an unsanitary or hazardous condition, the administrative authority is authorized to waive the permit, inspection, and testing requirements for the following plumbing work performed in one- and two-family dwellings:

(1) The reconnection of an existing water supply line to a replacement appliance that does not involve the replacement or alteration of the existing water supply line;

(2) Replacement of the internal working components of existing water closets, faucets, or valves;

(3) Replacement of sink faucets when the work does not include alterations to the existing plumbing piping system; or

(4) Replacement or resetting of water closets when the work does not include alterations to the existing plumbing piping systems.

D. The administrative authority is permitted to waive testing requirements for plumbing work that does not include any addition to or replacement, alteration, or relocation of any water supply, drainage, or vent piping, if it does not create a hazardous or unsanitary condition.

Subp. 2. (Repealed).

Subp. 3. Covering of work. No building drainage or plumbing system or part thereof shall be covered until it has been inspected, tested, and approved as herein prescribed.

If any building drainage or plumbing system or part thereof is covered before being regularly inspected, tested, and approved, as herein prescribed, it shall be uncovered upon the direction of the proper administrative authority.

Subp. 4. Building sewer. The building sewer shall be inspected by the proper administrative authority to ensure compliance with the provisions of the code.

Subp. 5. Certificate of approval. Upon the satisfactory completion and final inspection of the plumbing system, a certificate of approval shall be issued by the proper administrative authority.

Subp. 6. Plans and specifications. Prior to the installation by any person, corporation, or public agency, of a system of plumbing that serves the public or that serves any considerable number of persons, or any plumbing system that shall affect the public health in any manner, complete plans and specifications, together with any additional information that the commissioner of labor and industry may require, shall be submitted and approved by the commissioner. The appraisal of the commissioner shall reflect the degree to which these plans and specifications affect the public health and conform to the provisions of the *Minnesota Plumbing Code*. No construction shall proceed except in accordance with approved plans and specifications. Any material alteration or extension of the existing system shall be subject to these same requirements. This rule shall not apply to cities of the first class, except those plumbing installations in state-licensed health care facilities or in buildings in these cities owned by the state government.

Except as approved in Chapter 4715, there shall be no physical connection between water supply systems that are safe for domestic use and those that are unsafe for domestic use. There shall be no apparatus through which unsafe water may be discharged or drawn into a safe water supply system.

INTERNATIONAL CODE COUNCIL®
Copyright © 2014 ICC. ALL RIGHTS RESERVED. Accessed by William Munson on Jan 4, 2017 9:33:41 PM pursuant to License Agreement with ICC. No further reproduction or distribution authorized. ANY UNAUTHORIZED REPRODUCTION OR DISTRIBUTION IS A VIOLATION OF THE FEDERAL COPYRIGHT ACT AND THE LICENSE AGREEMENT, AND SUBJECT TO CIVIL AND CRIMINAL PENALTIES THEREUNDER.

1300.0220 CERTIFICATE OF OCCUPANCY

Subpart 1. Use and occupancy. No building or structure shall be used or occupied, and no change in the existing occupancy classification of a building, structure, or portion of a building or structure shall be made until the building official has issued a certificate of occupancy for the building or structure under this part. Issuance of a certificate of occupancy is not approval of a violation of the code or other ordinances of the municipality. Certificates presuming to give authority to violate or cancel the code or other ordinances of the municipality are not valid.

Exception: A municipality has the option of requiring certificates of occupancy for:

A. "U" occupancies constructed under the *International Building Code*;

B. Accessory structures constructed under the *International Residential Code*; or

C. Used manufactured homes moved into or within a jurisdiction.

Subp. 2. Existing structures. The legal occupancy of any structure existing on the date of adoption of the code shall be permitted to continue without change.

Subp. 3. Change in use. Changes in the character or use of an existing structure must comply with Chapter 1305 or 1311.

Subp. 4. Moved buildings. Buildings or structures moved into or within a jurisdiction shall comply with the provisions of the code for new buildings or structures.

Exception:

A. Buildings designed to comply with Chapter 1311; or

B. A residential building relocated within or into a municipality need not comply with the *Minnesota Energy Code* or Minnesota Statutes, Section 326B.439.

Subp. 5. Certificate issued. After the building official inspects a building or structure and finds no violations of the code or other laws that are enforced by the Department of Building Safety, the building official shall issue a certificate of occupancy containing the following:

A. The building permit number;

B. The address of the structure;

C. The name and address of the owner;

D. A statement that the described portion of the structure has been inspected for compliance with the requirements of the code for the occupancy and division of occupancy and the use for which the proposed occupancy is classified;

E. The name of the building official;

F. The edition of the code under which the permit was issued;

G. The use and occupancy classification;

H. The type of construction;

I. If an automatic sprinkler system is provided; and

J. Any special stipulations and conditions of the building permit.

Subp. 6. Temporary occupancy. The building official is authorized to issue a temporary certificate of occupancy before the completion of the entire work covered by the permit, provided that the portion or portions shall be occupied safely. The building official shall set a time period during which the temporary certificate of occupancy is valid.

Subp. 7. Revocation. The building official may issue a written suspension or revocation of a certificate of occupancy issued under the code if the certificate is issued in error or on the basis of incorrect information supplied, or if the building or use of the building, structure, or portion of the building or structure is in violation of any ordinance or regulation or a provision of the code.

1300.0225 MAINTENANCE

All buildings and structures, both existing and new, and all parts of the buildings or structures, shall be maintained in a safe and sanitary condition. All devices or safeguards required by this code shall be maintained in conformance with the code editions under which the devices or safeguards are installed. The owner or the owner's designated agent shall be responsible for the maintenance of buildings and structures. A building official is authorized to require reinspection of a building or structure if the building official is unable to determine whether or not the building or structure complies with this part.

1300.0230 BOARD OF APPEALS

Subpart 1. Local board of appeals. In order to hear and decide appeals of orders, decisions, or determinations made by the building official relative to the application and interpretation of this code, there shall be and is hereby created a board of appeals. The building official shall be an ex officio member of said board but shall have no vote on any matter before the board. The board of appeals shall be designated by the governing body. Appeals hearings must occur within ten working days from the date the municipality receives a properly completed application for appeal. If an appeals hearing is not held within this time, the applicant may appeal directly to the State Building Code Appeals Board.

The board shall adopt rules of procedures for conducting its business and shall render all decisions and findings in writing to the appellant with a duplicate copy to the building official and to the state building official within five working days of the decision. For jurisdictions without a board of appeals, the appellant may appeal to an appeals board assembled by the state of Minnesota, Department of Labor and Industry's Construction Codes and Licensing Division.

Subp. 2. Qualifications. The board of appeals shall consist of members who are qualified by experience and training to

INTERNATIONAL CODE COUNCIL®
Copyright © 2014 ICC. ALL RIGHTS RESERVED. Accessed by William Munson on Jan 4, 2017 9:33:41 PM pursuant to License Agreement with ICC. No further reproduction or distribution authorized. ANY UNAUTHORIZED REPRODUCTION OR DISTRIBUTION IS A VIOLATION OF THE FEDERAL COPYRIGHT ACT AND THE LICENSE AGREEMENT, AND SUBJECT TO CIVIL AND CRIMINAL PENALTIES THEREUNDER.

pass on matters pertaining to building construction and are not employees of the affected jurisdiction.

Subp. 3. Limitations on authority. An application for appeal shall be based on a claim that the true intent of this code or the rules legally adopted thereunder have been incorrectly interpreted, the provisions of this code do not fully apply, or an equally good or better form of construction is proposed. The board shall have no authority to waive requirements of this code.

Subp. 4. (Repealed).

Subp. 5. Final interpretive authority. In accordance with Minnesota Statutes, Section 326B.127, subdivision 5, the commissioner has final interpretive authority to all codes adopted as part of the *State Building Code*, except for the *State Plumbing Code*, the *State Electrical Code*, and the *State High Pressure Piping Code*.

1300.0240 DISCLAIMER CLAUSE

The inclusion of specific requirements relative to the manner of installation of any building or portion of any building or building equipment in one or more parts of the code does not limit this procedure to any particular type of installer or provide a basis upon which determination of the right to perform a procedure shall be made. The authority for this determination is in the various licensing statutes or ordinances for each type of installer who performs the work.

1300.0250 SEVERABILITY

The invalidity of any provision of the *Minnesota State Building Code* does not affect any other provisions of the code that can be given effect without the invalid provision and, to this end, the provisions of the code are declared to be severable.

INTERNATIONAL CODE COUNCIL®
Copyright © 2014 ICC. ALL RIGHTS RESERVED. Accessed by William Munson on Jan 4, 2017 9:33:41 PM pursuant to License Agreement with ICC. No further reproduction or distribution authorized. ANY UNAUTHORIZED REPRODUCTION OR DISTRIBUTION IS A VIOLATION OF THE FEDERAL COPYRIGHT ACT AND THE LICENSE AGREEMENT, AND SUBJECT TO CIVIL AND CRIMINAL PENALTIES THEREUNDER.

INTERNATIONAL CODE COUNCIL®
Copyright © 2014 ICC. ALL RIGHTS RESERVED. Accessed by William Munson on Jan 4, 2017 9:33:41 PM pursuant to License Agreement with ICC. No further reproduction or distribution authorized. ANY UNAUTHORIZED REPRODUCTION OR DISTRIBUTION IS A VIOLATION OF THE FEDERAL COPYRIGHT ACT AND THE LICENSE AGREEMENT, AND SUBJECT TO CIVIL AND CRIMINAL PENALTIES THEREUNDER.

1341.0005 INCORPORATION OF CHAPTER 11 OF THE 2012 INTERNATIONAL BUILDING CODE BY REFERENCE

For purposes of this chapter, "IBC" means the 2012 edition of the *International Building Code* as promulgated by the International Code Council, Inc., Washington, D.C. Chapter 11 of the IBC is incorporated by reference and made part of the *Minnesota State Building Code* except as amended in this chapter. Portions of this rule chapter reproduce excerpts from the 2012 IBC, International Code Council, Inc., Washington, D.C., copyright 2012, reproduced with permission, all rights reserved. The IBC is not subject to frequent change and a copy of the IBC, with amendments for use in Minnesota, is available in the office of the commissioner of labor and industry.

1341.0010 REFERENCED STANDARD

For purposes of this chapter, "ICC A117.1" means the 2009 edition of ICC/ANSI A117.1 as promulgated by the Accredited Standards Committee A117 on Architectural Features and Site Design of Public Buildings and Residential Structures for Persons with Disabilities. The ICC/ANSI All7.1-2009 edition is approved by the American National Standard Institute (ANSI) and owned by the International Code Council, Inc. ICC A117.1 is incorporated by reference in IBC Chapter 11 and made part of the *Minnesota State Building Code* except as amended in this chapter. Portions of this chapter reproduce text and tables from the ICC A117.1. The ICC All7.1 is not subject to frequent change and a copy of the ICC A117.l, with amendments for use in Minnesota, is available in the office of the commissioner of labor and industry. The ICC A117.l is copyright 2010 by the International Code Council, Inc., all rights reserved.

INTERNATIONAL CODE COUNCIL®
Copyright © 2014 ICC. ALL RIGHTS RESERVED. Accessed by William Munson on Jan 4, 2017 9:33:41 PM pursuant to License Agreement with ICC. No further reproduction or distribution authorized. ANY UNAUTHORIZED REPRODUCTION OR DISTRIBUTION IS A VIOLATION OF THE FEDERAL COPYRIGHT ACT AND THE LICENSE AGREEMENT, AND SUBJECT TO CIVIL AND CRIMINAL PENALTIES THEREUNDER.

INTERNATIONAL CODE COUNCIL®
Copyright © 2014 ICC. ALL RIGHTS RESERVED. Accessed by William Munson on Jan 4, 2017 9:33:41 PM pursuant to License Agreement with ICC. No further reproduction or distribution authorized. ANY UNAUTHORIZED REPRODUCTION OR DISTRIBUTION IS A VIOLATION OF THE FEDERAL COPYRIGHT ACT AND THE LICENSE AGREEMENT, AND SUBJECT TO CIVIL AND CRIMINAL PENALTIES THEREUNDER.

2015 MINNESOTA ACCESSIBILITY CODE

(Chapter 11 of the 2012 IBC with MN Amendments)

SECTION 1101
GENERAL

1101.1 Scope. The provisions of this chapter shall control the design and construction of facilities for accessibility to physically disabled persons.

1101.2 Design. Buildings and facilities shall be designed and constructed to be *accessible* in accordance with this code and ICC A117.1.

1101.3 Equity. Where not all similar type *facilities* and spaces are required to be *accessible*, *accessible* facilities and spaces shall be provided with the same or equivalent elements as provided in the nonaccessible *facilities* and spaces.

1101.4 Calculation of percentages. Where the required number of elements or *facilities* to be provided is determined by calculations of ratios or percentages and remainders or fractions result, the next greater whole number of such elements or *facilities* shall be provided. Where the determination of the required size or dimension of an element or facility involves ratios or percentages, rounding down for values less than one-half is permitted.

SECTION 1102
DEFINITIONS

1102.1 Definitions. The following words and terms shall, for the purposes of this chapter, have the following meanings:

ACCESSIBLE. A site, building, facility, or portion thereof that complies with this chapter.

ACCESSIBLE ROUTE. A continuous, unobstructed path that complies with this chapter.

ACCESSIBLE UNIT. A *dwelling unit* or sleeping unit that complies with this code and the provisions for *accessible* units in ICC A117.1.

APPROVED. "Approved" means approval by the building official, pursuant to the *Minnesota State Building Code*, by reason of: inspection, investigation, or testing; accepted principles; computer simulations; research reports; or testing performed by either a licensed engineer or by a locally or nationally recognized testing laboratory.

CIRCULATION PATH. An exterior or interior way of passage from one place to another for pedestrians.

CODE. For purposes of this chapter, "the code" or "this code" means the *Minnesota Accessibility Code*, Minnesota Rules, Chapter 1341.

COMMON USE. Interior or exterior circulation paths, rooms, spaces, or elements that are not for public use and are made available for the shared use of two or more people.

DETECTABLE WARNING. A standardized surface feature built in or applied to walking surfaces or other elements to warn visually impaired persons of hazards on a *circulation path*.

EMPLOYEE WORK AREA. All or any portion of a space used only by employees and only for work. Corridors, toilet rooms, kitchenettes, and break rooms are not *employee work areas*.

FACILITY. All or any portion of buildings, *structures*, site improvements, elements, and pedestrian or vehicular routes located on a site.

INTENDED TO BE OCCUPIED AS A RESIDENCE. A *dwelling unit* or sleeping unit that can or will be used all or part of the time as the occupant's place of abode.

MULTILEVEL ASSEMBLY SEATING. Seating that is arranged in distinct levels where each level is comprised of either multiple rows, or a single row of box seats accessed from a separate level.

MULTISTORY UNIT. A *dwelling unit* or sleeping unit with habitable space located on more than one *story*.

PRIMARY FUNCTION. A primary function is a major activity for which the facility is intended. Areas that contain a primary function include, but are not limited to, the customer service lobby of a bank, the dining area of a cafeteria, the meeting rooms in a conference center, as well as offices and other work areas in which the activities of the public accommodation or other private entity using the facility are carried out. Mechanical rooms, boiler rooms, supply rooms, employee lounges or locker rooms; janitorial closets, entrances, corridors, and restrooms are not areas containing a primary function.

PUBLIC ENTRANCE. An entrance that is not a service entrance or a restricted entrance.

PUBLIC-USE AREAS. Interior or exterior rooms or spaces that are made available to the general public.

RESTRICTED ENTRANCE. An entrance that is made available for common use on a controlled basis, but not public use, and that is not a service entrance.

SELF-SERVICE STORAGE FACILITY. Real property designed and used for the purpose of renting or leasing individual storage spaces to customers for the purpose of storing and removing personal property on a self-service basis.

SERVICE ENTRANCE. An entrance intended primarily for delivery of goods or services.

SITE. A parcel of land bounded by a lot line or a designated portion of public right-of-way.

TECHNICALLY INFEASIBLE. An alteration of a building or a facility that has little likelihood of being accom-

INTERNATIONAL CODE COUNCIL®
Copyright © 2014 ICC. ALL RIGHTS RESERVED. Accessed by William Munson on Jan 4, 2017 9:33:41 PM pursuant to License Agreement with ICC. No further reproduction or distribution authorized. ANY UNAUTHORIZED REPRODUCTION OR DISTRIBUTION IS A VIOLATION OF THE FEDERAL COPYRIGHT ACT AND THE LICENSE AGREEMENT, AND SUBJECT TO CIVIL AND CRIMINAL PENALTIES THEREUNDER.

plished because the existing structural conditions require the removal or alteration of a load-bearing member that is an essential part of the structural frame, or because other existing physical or site constraints prohibit modification or addition of elements, spaces, or features which are in full and strict compliance with the minimum requirements for new construction and which are necessary to provide accessibility.

TYPE A UNIT. A *dwelling unit* or sleeping unit designed and constructed for accessibility in accordance with this code and the provisions for Type A units in ICC A117.1.

TYPE B UNIT. A *dwelling unit* or sleeping unit designed and constructed for accessibility in accordance with this code and the provisions for *Type B units* in the ICC A117.1, consistent with the design and construction requirements of the federal Fair Housing Act.

WHEELCHAIR SPACE. A space for a single wheelchair and its occupant.

1102.2 Terms not defined. Where terms are not defined through the methods authorized by this chapter, the Merriam-Webster Collegiate Dictionary, available at www.m-w.com, shall be considered as providing ordinarily accepted meanings. The dictionary is incorporated by reference, is subject to frequent change, and is available through the Minitex interlibrary loan system.

SECTION 1103
SCOPING REQUIREMENTS

1103.1 Where required. *Sites*, buildings, *structures*, *facilities*, elements and spaces, temporary or permanent, shall be *accessible* to persons with physical disabilities.

1103.2 General exceptions. *Sites*, buildings, *structures*, *facilities*, elements and spaces shall be exempt from this chapter to the extent specified in this section.

1103.2.1 Specific requirements. Accessibility is not required in buildings and *facilities*, or portions thereof, to the extent permitted by Sections 1104 to 1113.

1103.2.2 Existing buildings. Existing buildings shall comply with Sections 1111 to 1113 as applicable.

1103.2.3 Employee work areas. Spaces and elements within *employee work areas* shall only be required to comply with Sections 907.9.1.2, 1007 and 1104.3.1 and shall be designed and constructed so that individuals with disabilities can approach, enter and exit the work area. Work areas, or portions of work areas, that are less than 300 square feet (30 m^2) in area and located 7 inches (178 mm) or more above or below the ground or finish floor where the change in elevation is essential to the function of the space shall be exempt from all requirements.

1103.2.4 Detached dwellings. Detached one- and two-family *dwellings* and accessory structures, and their associated *sites* and facilities, are not required to be *accessible*.

1103.2.5 Utility buildings. Occupancies in Group U are exempt from the requirements of this chapter other than the following:

1. In agricultural buildings, access is required to paved work areas and areas open to the general public.
2. Private garages or carports that contain required *accessible* parking.

1103.2.6 Construction sites. Structures, *sites* and equipment directly associated with the actual processes of construction including, but not limited to, scaffolding, bridging, materials hoists, materials storage or construction trailers are not required to be *accessible*.

1103.2.7 Raised areas. Raised areas used primarily for purposes of security, life safety or fire safety including, but not limited to, observation galleries, prison guard towers, fire towers or lifeguard stands, are not required to be *accessible* or to be served by an *accessible route*.

1103.2.8 Limited access spaces. Nonoccupiable spaces accessed only by ladders, catwalks, crawl spaces, freight elevators or very narrow passageways are not required to be *accessible*.

1103.2.9 Equipment spaces. Spaces frequented only by personnel for maintenance, repair or monitoring of equipment are not required to be *accessible*. Such spaces include, but are not limited to, elevator pits, elevator *penthouses*, mechanical, electrical or communications equipment rooms, piping or equipment catwalks, water or sewage treatment pump rooms and stations, electric substations and transformer vaults, and highway and tunnel utility facilities.

1103.2.10 Single-occupant structures. Single-occupant structures accessed only by passageways below grade or elevated above grade including, but not limited to, toll booths that are accessed only by underground tunnels, are not required to be *accessible*.

1103.2.11 Residential Group R-1. Buildings of Group R-1 containing not more than five *sleeping unit*s for rent or hire that are also occupied as the residence of the proprietor are not required to be *accessible*.

1103.2.12 Day care facilities. Deleted.

1103.2.13 Live/work units. Deleted.

1103.2.14 Detention and correctional facilities. In detention and correctional facilities, *common use* areas that are used only by inmates or detainees and security personnel, and that do not serve holding cells or housing cells required to be *accessible*, are not required to be *accessible* or to be served by an *accessible route*.

1103.2.15 Walk-in coolers and freezers. Walk-in coolers and freezers intended for employee use only are not required to be *accessible*.

1103.2.16 Recreational facilities. Recreational equipment such as play *structures*, amusement rides, and miniature golf are not required to be *accessible*.

INTERNATIONAL CODE COUNCIL®
Copyright © 2014 ICC. ALL RIGHTS RESERVED. Accessed by William Munson on Jan 4, 2017 9:33:41 PM pursuant to License Agreement with ICC. No further reproduction or distribution authorized. ANY UNAUTHORIZED REPRODUCTION OR DISTRIBUTION IS A VIOLATION OF THE FEDERAL COPYRIGHT ACT AND THE LICENSE AGREEMENT, AND SUBJECT TO CIVIL AND CRIMINAL PENALTIES THEREUNDER.

SECTION 1104
ACCESSIBLE ROUTE

1104.1 Site arrival points. *Accessible routes* within the *site* shall be provided from public transportation stops; *accessible* parking; *accessible* passenger loading zones; and public streets or sidewalks to the *accessible* building entrance served.

Exception: Other than in buildings or facilities containing or serving *Type B units*, an *accessible route* shall not be required between *site* arrival points and the building or facility entrance if the only means of access between them is a vehicular way not providing for pedestrian access.

1104.2 Within a site. At least one *accessible route* shall connect *accessible* buildings, *accessible* facilities, *accessible* elements and *accessible* spaces that are on the same *site*.

Exception: An *accessible route* is not required between *accessible* buildings, *accessible* facilities, *accessible* elements and *accessible* spaces that have, as the only means of access between them, a vehicular way not providing for pedestrian access.

1104.3 Connected spaces. When a building or portion of a building is required to be *accessible*, an *accessible route* shall be provided to each portion of the building, to *accessible* building entrances connecting *accessible pedestrian walkways* and the *public way*.

Exceptions:

1. In a building, room or space used for assembly purposes with *fixed seating*, an *accessible route* shall not be required to serve levels where *wheelchair spaces* are not provided.
2. Deleted.

1104.3.1 Employee work areas. *Common use circulation paths* within *employee work areas* shall be *accessible routes*.

Exceptions:

1. *Common use circulation paths*, located within *employee work areas* that are less than 1,000 square feet (93 m^2) in size and defined by permanently installed partitions, counters, casework or furnishings, shall not be required to be *accessible routes*.
2. *Common use circulation paths*, located within *employee work areas*, that are an integral component of equipment, shall not be required to be *accessible routes*.
3. *Common use circulation paths*, located within exterior *employee work areas* that are fully exposed to the weather, shall not be required to be *accessible routes*.

1104.3.2 Press boxes. Press boxes in a building, room or space used for assembly purposes shall be on an *accessible route*.

Exceptions:

1. An *accessible route* shall not be required to press boxes in *bleachers* that have points of entry at only one level, provided that the aggregate area of all press boxes is 500 square feet (46 m^2) maximum.
2. An *accessible route* shall not be required to free-standing press boxes that are elevated above grade 12 feet (3660 mm) minimum provided that the aggregate area of all press boxes is 500 square feet (46 m^2) maximum.

1104.4 Multilevel buildings and facilities. Multilevel buildings and *facilities* shall comply with Sections 1104.4.1 to 1104.4.4 as applicable.

1104.4.1 General. At least one *accessible route* shall connect each level, including *mezzanines*, in multilevel buildings and *facilities*.

Exceptions:

1. An *accessible route* is not required to stories and *mezzanines* that have an *occupant load* of not more than 30 and are located above or below *accessible* levels.
2. Levels that do not contain *accessible* elements or other spaces as determined by Section 1107 or 1108 are not required to be served by an *accessible route* from an *accessible* level.
3. In air traffic control towers, an *accessible route* is not required to serve the cab and the floor immediately below the cab.
4. Vertical access to elevated employee work stations within a courtroom is not required at the time of initial construction, provided a *ramp*, lift, or elevator can be installed without requiring reconfiguration or extension of the courtroom or extension of the electrical system.

1104.4.2 Specific public areas. At least one *accessible route* shall connect each level that is open to the public, including *mezzanines*, in the following multilevel buildings and *facilities*:

1. Group M occupancies;
2. Health care providers, Group B or I occupancies;
3. Nongovernment passenger transportation and airport facilities, Group A-3 or B occupancies; and
4. Government facilities.

Exception: In air traffic control towers, an *accessible route* is not required to serve the cab and the floor immediately below the cab.

1104.4.3 Musical risers. An *accessible route* shall be provided to the main floor level and to at least one riser level of built-in or fixed riser assemblies designed for instrumental or choral use.

Exception: An *accessible route* is not required to risers where performers are positioned on the main floor level at the base of the risers.

1104.4.4 Tiered areas. Tiered areas without fixed seats shall comply with Section 1104.4.4.1 or 1104.4.4.2.

INTERNATIONAL CODE COUNCIL®
Copyright © 2014 ICC. ALL RIGHTS RESERVED. Accessed by William Munson on Jan 4, 2017 9:33:41 PM pursuant to License Agreement with ICC. No further reproduction or distribution authorized. ANY UNAUTHORIZED REPRODUCTION OR DISTRIBUTION IS A VIOLATION OF THE FEDERAL COPYRIGHT ACT AND THE LICENSE AGREEMENT, AND SUBJECT TO CIVIL AND CRIMINAL PENALTIES THEREUNDER.

1104.4.4.1 Small tiered areas utilizing the floor area at the base of the tier. Where a tiered area has no more than five tiers, the tier assembly has an *occupant load* of not more than 300, and the floor level at the base of the tier is utilized for the same use as the tiers, an *accessible route* shall be provided to the floor level at the base of the tier.

1104.4.4.2 Other tiered areas. Tiered areas not complying with Section 1104.4.4.1 shall provide an *accessible route* to the floor level at the base of the tier and to 10 percent, but not less than one level, of the tiered levels. *Accessible* tiers shall be separated by a minimum of five intervening tiers.

Exceptions:

1. An *accessible route* shall not be required to tiers where the depth of each tier is 36 inches (915 mm) maximum.
2. An *accessible route* shall not be required to tiers where the floor level at the base of the tier is not utilized for the same use as the tiers, provided: there are no more than five tiers; the tier assembly has an *occupant load* of not more than 300; individuals are intended to sit directly on the tier surface; and, a clear floor space is provided adjacent to the tier which allows a transfer onto a tier.

1104.5 Location. *Accessible* routes shall be the shortest route possible and coincide with a primary use general *circulation path*. Where the *circulation path* is interior, the *accessible route* shall also be interior. Where the *circulation path* is within a tenant space in a multitenant facility, the *accessible route* shall also be within the tenant space. Where only one *accessible route* is provided, the *accessible route* shall not pass through kitchens, storage rooms, restrooms, closets, or similar spaces.

Exceptions:

1. *Accessible* routes from parking garages contained within and serving Type B dwelling units are required to be interior only when the garage provides required *accessible* parking and where dwelling units not providing *accessible* parking are provided with interior routes.
2. A single *accessible route* is permitted to pass through a kitchen or storage room in an *Accessible* unit, *Type A unit*, or *Type B unit*.
3. Where the *accessible route* cannot coincide with a general *circulation path*, the *accessible route* shall be located in the same area as the general *circulation path*.

1104.6 Security barriers. Security barriers including, but not limited to, security bollards and security check points shall not obstruct a required *accessible route* or *accessible means of egress*.

Exception: Where security barriers incorporate elements that cannot comply with these requirements, such as certain metal detectors, fluoroscopes or other similar devices, the *accessible route* shall be permitted to be provided adjacent to security screening devices. The *accessible route* shall permit persons with disabilities passing around security barriers to maintain visual contact with their personal items to the same extent provided others passing through the security barrier.

SECTION 1105
ACCESSIBLE ENTRANCES

1105.1 Public entrances. In addition to *accessible* entrances required by Sections 1105.1.1 to 1105.1.5, at least 60 percent of all *public entrances* to each building, facility, and tenant space shall be *accessible*.

Exceptions:

1. An *accessible* entrance is not required to areas not required to be *accessible*.
2. Loading and *service entrances* that are not the only entrance to a tenant space.

1105.1.1 Parking garage entrances. Where provided, direct access for pedestrians from parking structures to buildings or facility entrances shall be *accessible*.

1105.1.2 Entrances from tunnels or elevated walkways. Where direct access is provided for pedestrians from a pedestrian tunnel or elevated walkway to a building or facility, at least one entrance to the building or facility from each tunnel or walkway shall be *accessible*.

1105.1.3 Restricted entrances. Where *restricted entrances* are provided to a building or facility, at least one *restricted entrance* to the building or facility shall be *accessible*.

1105.1.4 Entrances for inmates or detainees. Where entrances used only by inmates or detainees and security personnel are provided at judicial facilities, detention facilities or correctional facilities, at least one such entrance shall be *accessible*.

1105.1.5 Service entrances. If a *service entrance* is the only entrance to a building or a tenant space in a facility, that entrance shall be *accessible*.

1105.1.6 Tenant spaces, dwelling units and sleeping units. Deleted.

1105.2 Dwelling unit and sleeping unit entrances. At least one *accessible* entrance shall be provided to each *dwelling unit* and sleeping unit required to be an *Accessible* unit, *Type A unit*, or *Type B unit*.

INTERNATIONAL CODE COUNCIL®
Copyright © 2014 ICC. ALL RIGHTS RESERVED. Accessed by William Munson on Jan 4, 2017 9:33:41 PM pursuant to License Agreement with ICC. No further reproduction or distribution authorized. ANY UNAUTHORIZED REPRODUCTION OR DISTRIBUTION IS A VIOLATION OF THE FEDERAL COPYRIGHT ACT AND THE LICENSE AGREEMENT, AND SUBJECT TO CIVIL AND CRIMINAL PENALTIES THEREUNDER.

SECTION 1106
PARKING AND PASSENGER LOADING FACILITIES

1106.1 Required. Where parking is provided, *accessible* parking spaces shall be provided in compliance with Table 1106.1, except as required by Sections 1106.2 through 1106.4. Where more than one parking facility is provided on a *site*, the number of parking spaces required to be *accessible* shall be calculated separately for each parking facility.

Exception: This section does not apply to parking spaces used exclusively for buses, trucks, other delivery vehicles, law enforcement vehicles or vehicular impound and motor pools where lots accessed by the public are provided with an *accessible* passenger loading zone.

TABLE 1106.1
ACCESSIBLE PARKING SPACES

TOTAL PARKING SPACES PROVIDED	REQUIRED MINIMUM NUMBER OF ACCESSIBLE SPACES
1 to 25	1
26 to 50	2
51 to 75	3
76 to 100	4
101 to 150	5
151 to 200	6
201 to 300	7
301 to 400	8
401 to 500	9
501 to 1,000	2% of total
1,001 and over	20, plus one for each 100, or fraction thereof, over 1,000

1106.2 Groups R-2 and R-3. At least 2 percent, but not less than one, of each type of parking space provided for occupancies in Groups R-2 and R-3, which are required to have *Accessible*, *Type A* or *Type B dwelling* or *sleeping unit*s, shall be *accessible*. Where parking is provided within or beneath a building, *accessible* parking spaces shall also be provided within or beneath the building.

1106.3 Hospital outpatient facilities. At least 10 percent, but not less than one, of care recipient and visitor parking spaces provided to serve hospital outpatient facilities shall be *accessible*.

1106.4 Rehabilitation facilities and outpatient physical therapy facilities. At least 20 percent, but not less than one, of the portion of care recipient and visitor parking spaces serving rehabilitation facilities specializing in treating conditions that affect mobility and outpatient physical therapy facilities shall be *accessible*.

1106.5 Van spaces. For every six or fraction of six *accessible* parking spaces, at least one shall be a van-accessible parking space.

Exception: In Group R-2 and R-3 occupancies, van-accessible spaces located within private garages shall be permitted to have vehicular routes, entrances, parking spaces and access aisles with a minimum vertical clearance of 7 feet (2134 mm).

1106.6 Location. *Accessible* parking spaces shall be located on the shortest *accessible route* of travel from adjacent parking to an *accessible* building entrance. In parking facilities that do not serve a particular building, *accessible* parking spaces shall be located on the shortest route to an *accessible* pedestrian entrance to the parking facility. Where buildings have multiple *accessible* entrances with adjacent parking, *accessible* parking spaces shall be dispersed and located near the *accessible* entrances.

Exceptions:

1. In multilevel parking structures, van-accessible parking spaces are permitted on one level.
2. *Accessible* parking spaces shall be permitted to be located in different parking facilities if substantially equivalent or greater accessibility is provided in terms of distance from an *accessible* entrance or entrances, parking fee and user convenience.

1106.7 Passenger loading zones. Passenger loading zones shall be *accessible*.

1106.7.1 Continuous loading zones. Where passenger loading zones are provided, one passenger loading zone in every continuous 100 linear feet (30.4 m) maximum of loading zone space shall be *accessible*.

1106.7.2 Medical facilities. A passenger loading zone shall be provided at an *accessible* entrance to licensed medical and long-term care facilities where people receive physical or medical treatment or care and where the period of stay exceeds 24 hours.

1106.7.3 Valet parking. A passenger loading zone shall be provided at valet parking services.

1106.7.4 Mechanical access parking garages. Mechanical access parking garages shall provide at least one passenger loading zone at vehicle drop-off and vehicle pick-up areas.

1106.7.5 Bus boarding and alighting. At least one bus boarding and alighting space in each boarding and alighting area shall be *accessible*.

1106.8 Restriping. Renewing parking striping shall be allowed. New striping due to surface seal coating, resurfacing, reconfiguration of parking spaces, or some other reason, shall provide *accessible* spaces as applicable in Sections 1106.1 to 1106.7.

SECTION 1107
DWELLING UNITS AND SLEEPING UNITS

1107.1 General. In addition to the other requirements of this chapter, occupancies having *dwelling units* or *sleeping unit*s shall be provided with *accessible* features in accordance with this section.

1107.2 Design. *Dwelling units* and *sleeping unit*s that are required to be *Accessible units*, *Type A units* and *Type B units* shall comply with the applicable portions of Chapter 10 of ICC A117.1. Units required to be *Type A units* are permitted to be designed and constructed as *Accessible units*. Units

INTERNATIONAL CODE COUNCIL®
Copyright © 2014 ICC. ALL RIGHTS RESERVED. Accessed by William Munson on Jan 4, 2017 9:33:41 PM pursuant to License Agreement with ICC. No further reproduction or distribution authorized. ANY UNAUTHORIZED REPRODUCTION OR DISTRIBUTION IS A VIOLATION OF THE FEDERAL COPYRIGHT ACT AND THE LICENSE AGREEMENT, AND SUBJECT TO CIVIL AND CRIMINAL PENALTIES THEREUNDER.

required to be *Type B units* are permitted to be designed and constructed as *Accessible units* or as *Type A units*.

1107.3 Accessible spaces. Rooms and spaces available to the general public or available for use by residents and serving *Accessible units*, *Type A units* or *Type B units* shall be *accessible*. *Accessible* spaces shall include toilet and bathing rooms, kitchen, living and dining areas and any exterior spaces, including patios, terraces and balconies.

Exceptions:

1. Recreational facilities in accordance with Section 1109.15.
2. In Group I-2 facilities, doors to *sleeping unit*s shall be exempted from the requirements for maneuvering clearance at the room side provided the door is a minimum of 44 inches (1118 mm) in width.

1107.4 Accessible route. At least one *accessible route* shall connect *accessible* building or facility entrances with the primary entrance of each *Accessible* unit, *Type A unit*, and *Type B unit* within the building or facility and with those exterior and interior spaces and *facilities* that serve the units.

Exceptions:

1. If, due to circumstances outside the control of the owner, either the slope of the finished ground level between *accessible* facilities and *Type B units* exceeds one unit vertical in 12 units horizontal (1:12), or where physical barriers or legal restrictions prevent the installation of an *accessible route*, a vehicular route with parking that complies with Section 1106 at each public or common use facility or building is permitted in place of the *accessible route*.
2. Deleted.

1107.5 Group I. *Accessible* units and *Type B units* shall be provided in Group I occupancies in accordance with Sections 1107.5.1 to 1107.5.5. Dwelling units and *sleeping units* intended to be used by guests in Groups I-1 and I-2 occupancies providing *Accessible* units or *Type B units* shall comply with Sections 1107.6.1.1, 1107.6.1.3, and 1107.6.1.5.

1107.5.1 Group I-1. In Group I-1 occupancies not licensed by the Department of Health, *Accessible* units and *Type B units* shall be provided in accordance with Sections 1107.5.1.1 and 1107.5.1.2. Group I-1 boarding care facilities licensed by the Department of Health shall be provided in accordance with Section 1107.5.1.3.

1107.5.1.1 Accessible units. At least 4 percent, but not less than one, of the *dwelling units* and *sleeping unit*s shall be *Accessible units*.

1107.5.1.2 Type B units. In structures with four or more *dwelling units* or *sleeping unit*s *intended to be occupied as a residence*, every *dwelling unit* and *sleeping unit intended to be occupied as a residence* shall be a *Type B unit*.

Exception: The number of *Type B units* is permitted to be reduced in accordance with Section 1107.7.

1107.5.1.3 Boarding care. All boarding care resident rooms and common use bathing rooms provided only for boarding care resident use shall comply with Minnesota Rules, Chapter 4660. All other rooms and spaces shall comply with the applicable provisions of this code.

1107.5.2 Group I-2 nursing homes. In Group I-2 nursing homes licensed by the Department of Health, at least 10 percent, but not less than one room of all nursing home resident rooms, and all common use toilet rooms and bathing rooms provided only for nursing home resident use, shall comply with Minnesota Rules, part 4658.4150. All other rooms and spaces shall comply with the applicable provisions of this code.

1107.5.2.1 Accessible units. Deleted.

1107.5.2.2 Type B units. Deleted.

1107.5.3 Group I-2 hospitals. *Accessible units* and *Type B units* shall be provided in general-purpose hospitals, psychiatric facilities and detoxification facilities of Group I-2 occupancies in accordance with Sections 1107.5.3.1 and 1107.5.3.2.

1107.5.3.1 Accessible units. At least 10 percent, but not less than one, of the *dwelling units* and *sleeping unit*s shall be *Accessible units*.

1107.5.3.2 Type B units. In structures with four or more *dwelling units* or *sleeping unit*s *intended to be occupied as a residence*, every *dwelling unit* and *sleeping unit intended to be occupied as a residence* shall be a *Type B unit*.

Exception: The number of *Type B units* is permitted to be reduced in accordance with Section 1107.7.

1107.5.4 Group I-2 rehabilitation facilities. In hospitals and rehabilitation facilities of Group I-2 occupancies which specialize in treating conditions that affect mobility, or units within either which specialize in treating conditions that affect mobility, 100 percent of the *dwelling units* and *sleeping unit*s shall be *Accessible units*.

1107.5.5 Group I-3. *Accessible units* shall be provided in Group I-3 occupancies in accordance with Sections 1107.5.5.1 through 1107.5.5.3.

1107.5.5.1 Group I-3 sleeping units. In Group I-3 occupancies, at least 3 percent of the total number of dwelling units and *sleeping units* in the facility, but not less than one unit in each classification level, shall be *Accessible* units.

1107.5.5.2 Special holding cells and special housing cells or rooms. In addition to the *Accessible units* required by Section 1107.5.5.1, where special holding cells or special housing cells or rooms are provided, at least one serving each purpose shall be an *Accessible unit*. Cells or rooms subject to this requirement include, but are not limited to, those used for purposes of orientation, protective custody, administrative or disciplinary detention or segregation, detoxification and medical isolation.

Exception: Cells or rooms specially designed without protrusions and that are used solely for purposes of suicide prevention shall not be required to include grab bars.

INTERNATIONAL CODE COUNCIL®
Copyright © 2014 ICC. ALL RIGHTS RESERVED. Accessed by William Munson on Jan 4, 2017 9:33:41 PM pursuant to License Agreement with ICC. No further reproduction or distribution authorized. ANY UNAUTHORIZED REPRODUCTION OR DISTRIBUTION IS A VIOLATION OF THE FEDERAL COPYRIGHT ACT AND THE LICENSE AGREEMENT, AND SUBJECT TO CIVIL AND CRIMINAL PENALTIES THEREUNDER.

1107.5.5.3 Medical care facilities. Patient *sleeping unit*s or cells required to be *Accessible units* in medical care facilities shall be provided in addition to any medical isolation cells required to comply with Section 1107.5.5.2.

1107.6 Group R. Dwelling units and *sleeping units* shall be provided in Group R occupancies in accordance with Sections 1107.6.1 to 1107.6.4, except as provided in subitems (1) to (3). Bedrooms within student facilities and congregate living facilities shall be considered *sleeping units* for the purpose of determining the number of units.

(1) Dwelling units and *sleeping units* intended to be used by guests in Groups R-2, R-3, and R-4 occupancies providing *Type B units* shall comply with Sections 1107.6.1.1, 1107.6.1.3, and 1107.6.1.5.

(2) Facilities that provide student housing shall be considered *sleeping units* and comply with Sections 1107.6.1.1 to 1107.6.1.5.

(3) Crew quarters that are used exclusively as a residence by emergency response personnel of a government entity and the kitchens and bathrooms exclusively serving those quarters shall, at a minimum, comply with the provisions for *Type B units*.

1107.6.1 Group R-1. *Accessible* units, *Type B units*, and units with communication features shall be provided in Group R-1 occupancies in accordance with Sections 1107.6.1.1 to 1107.6.1.4. Units not required to be *Accessible* units or *Type B units* shall comply with Section 1107.6.1.5.

1107.6.1.1 Accessible units. *Accessible* dwelling units and *sleeping units* shall be provided in accordance with Table 1107.6.1.1. All dwelling units and *sleeping units* on a site shall be considered to determine the total number of *Accessible* units.

1107.6.1.1.1 Accessible unit facilities. All interior and exterior spaces provided as part of or serving an *Accessible dwelling unit* or *sleeping unit* shall be *accessible* and be located on an *accessible route*.

Exceptions:

1. Where multiple bathrooms are provided within an *Accessible unit*, at least one full bathroom shall be *accessible*.
2. Where multiple-family or assisted bathrooms serve an *Accessible unit*, at least 50 percent but not less than one room for each use at each cluster shall be *accessible*.
3. Five percent, but not less than one bed shall be *accessible*.

1107.6.1.2 Type B units. In structures with four or more *dwelling units* or *sleeping unit*s *intended to be occupied as a residence*, every *dwelling unit* and *sleeping unit intended to be occupied as a residence* shall be a *Type B unit*.

Exception: The number of *Type B units* is permitted to be reduced in accordance with Section 1107.7.

1107.6.1.3 Communication features. Dwelling units and *sleeping units* with *accessible* communication features shall be provided in accordance with Table 1107.6.1.3 and shall provide the following:

1. Audible and visual alarms complying with ICC A117.1; and
2. Visual notification devices to alert room occupants of a door knock or bell. Notification

TABLE 1107.6.1.1
ACCESSIBLE DWELLING UNITS AND SLEEPING UNITS

TOTAL NUMBER OF UNITS PROVIDED	MINIMUM REQUIRED NUMBER OF ACCESSIBLE UNITS WITHOUT ROLL-IN SHOWERS	MINIMUM REQUIRED NUMBER OF ACCESSIBLE UNITS WITH ROLL-IN SHOWERS	TOTAL NUMBER OF REQUIRED ACCESSIBLE UNITS
1 to 25	1	0	1
26 to 50	2	0	2
51 to 75	3	1	4
76 to 100	4	1	5
101 to 150	5	2	7
151 to 200	6	2	8
201 to 300	7	3	10
301 to 400	8	4	12
401 to 500	9	4	13
501 to 1,000	2% of total	1% of total	3% of total
Over 1,000	20, plus 1 for each 100, or fraction thereof, over 1,000	10 plus 1 for each 100, or fraction thereof, over 1,000	30 plus 2 for each 100, or fraction thereof, over 1,000

INTERNATIONAL CODE COUNCIL®
Copyright © 2014 ICC. ALL RIGHTS RESERVED. Accessed by William Munson on Jan 4, 2017 9:33:41 PM pursuant to License Agreement with ICC. No further reproduction or distribution authorized. ANY UNAUTHORIZED REPRODUCTION OR DISTRIBUTION IS A VIOLATION OF THE FEDERAL COPYRIGHT ACT AND THE LICENSE AGREEMENT, AND SUBJECT TO CIVIL AND CRIMINAL PENALTIES THEREUNDER.

devices shall not be connected to visual alarm signal appliances.

1107.6.1.4 Dispersion. Units required to comply with Sections 1107.6.1.1 and 1107.6.1.3 shall be dispersed to multiple floors in multistory facilities having more than two stories or providing more than 100 total units. Units required to comply with Sections 1107.6.1.1 and 1107.6.1.3 shall be dispersed among the various classes of rooms. Where the minimum number of units required to comply with Sections 1107.6.1.1 and 1107.6.1.3 is not sufficient to allow for complete dispersion, units shall be dispersed in the following priority: room type, number of beds, and amenities. At least one unit required to comply with Section 1107.6.1.1 shall also comply with Section 1107.6.1.3. Not more than 10 percent of units required to comply with Section 1107.6.1.1 shall be used to satisfy the minimum number of units required to comply with Section 1107.6.1.3.

1107.6.1.5 Passage doors. Passage doors into and within units not required to comply with Section 1107.6.1.1 or 1107.6.1.2 shall provide a clear width in compliance with ICC A117.1.

Exception: Shower and sauna doors.

1107.6.2 Group R-2. Dwelling units and *sleeping units* shall be provided in Group R-2 occupancies in accordance with Sections 1107.6.2.1 and 1107.6.2.2.

1107.6.2.1 Apartment houses, monasteries and convents. *Type A units* and *Type B units* shall be provided in apartment houses, monasteries and convents in accordance with Sections 1107.6.2.1.1 and 1107.6.2.1.2.

1107.6.2.1.1 Type A units. In Group R-2 occupancies containing more than seven dwelling units or *sleeping units*, at least 2 percent but not less than one of the units shall be a *Type A unit*. All Group R-2 units within a contiguous parcel of land development, irrespective of lot lines and public rights-of-way within the development, shall be considered to determine the total number of units and the required number of Type A units. Type A units shall be dispersed among the various classes of units. Where three or more Type A units are required, at least one *Type A unit* shall be provided with an *accessible* roll-in shower.

Exceptions:

1. The number of Type A units is permitted to be reduced in accordance with Section 1107.7.
2. Existing Group R-2 units shall not contribute to the total number of units considered to determine the number of Type A units required.

1107.6.2.1.2 Type B units. Where there are four or more *dwelling units* or *sleeping units intended to be occupied as a residence* in a single structure, every *dwelling unit* and *sleeping unit intended to be occupied as a residence* shall be a *Type B unit*.

Exception: The number of *Type B units* is permitted to be reduced in accordance with Section 1107.7.

1107.6.2.2 Group R-2 other than apartment houses, monasteries, and convents. In Group R-2 occupancies, other than apartment houses, monasteries, and convents, dwelling units and *sleeping units* shall be provided in accordance with Sections 1107.6.1.1 to 1107.6.1.5.

1107.6.2.2.1 Accessible units. Deleted.

1107.6.2.2.2 Type B units. Deleted.

TABLE 1107.6.1.3
DWELLING OR SLEEPING UNITS WITH ACCESSIBLE COMMUNICATION FEATURES

TOTAL NUMBER OF DWELLING OR SLEEPING UNITS PROVIDED	MINIMUM REQUIRED NUMBER OF DWELLING OR SLEEPING UNITS WITH ACCESSIBLE COMMUNICATION FEATURES
1	1
2 to 25	2
26 to 50	4
51 to 75	7
76 to 100	9
101 to 150	12
151 to 200	14
201 to 300	17
301 to 400	20
401 to 500	22
501 to 1,000	5 percent of total
Over 1,000	50, plus 3 for each 100 over 1,000

INTERNATIONAL CODE COUNCIL®
Copyright © 2014 ICC. ALL RIGHTS RESERVED. Accessed by William Munson on Jan 4, 2017 9:33:41 PM pursuant to License Agreement with ICC. No further reproduction or distribution authorized. ANY UNAUTHORIZED REPRODUCTION OR DISTRIBUTION IS A VIOLATION OF THE FEDERAL COPYRIGHT ACT AND THE LICENSE AGREEMENT, AND SUBJECT TO CIVIL AND CRIMINAL PENALTIES THEREUNDER.

1107.6.3 Group R-3. Group R-3 occupancies shall comply with Section 1107.6.3.1, 1107.6.3.2, or 1107.6.3.3 as applicable.

1107.6.3.1 Dwelling units and sleeping units. In occupancies where there are four or more dwelling units or *sleeping units* intended to be occupied as a residence in a single structure, every *dwelling unit* and sleeping unit intended to be occupied as a residence shall be a *Type B unit*.

Exception: The number of *Type B units* is permitted to be reduced in accordance with Section 1107.7.

1107.6.3.2 Congregate living facilities, boarding houses, and care facilities. Congregate living facilities, boarding houses, and care facilities that have four or more *sleeping units* in each facility shall comply with Sections 1107.6.4.1 and 1107.6.4.2.

1107.6.3.3 Care facilities. Care facilities that provide accommodations for less than 24 hours are not required to be *accessible*.

1107.6.4 Group R-4. *Accessible units* and *Type B units* shall be provided in Group R-4 occupancies in accordance with Sections 1107.6.4.1 and 1107.6.4.2.

1107.6.4.1 Accessible units. At least one of the *dwelling* or *sleeping unit*s shall be an *Accessible unit*.

1107.6.4.2 Type B units. In structures with four or more *dwelling units* or *sleeping unit*s *intended to be occupied as a residence*, every *dwelling unit* and *sleeping unit intended to be occupied as a residence* shall be a *Type B unit*.

Exception: The number of *Type B units* is permitted to be reduced in accordance with Section 1107.7.

1107.7 General exceptions. Where specifically permitted by Section 1107.5 or 1107.6, the required number of Type A and *Type B units* is permitted to be reduced in accordance with Sections 1107.7.1 to 1107.7.6.

1107.7.1 Structures without elevator service. Where no elevator service is provided in a structure, only the *dwelling units* and *sleeping unit*s that are located on stories indicated in Sections 1107.7.1.1 and 1107.7.1.2 are required to be *Type A units* and *Type B units*, respectively. The number of *Type A units* shall be determined in accordance with Section 1107.6.2.1.1.

1107.7.1.1 One story with Type B units required. At least one *story* containing *dwelling units* or *sleeping unit*s *intended to be occupied as a residence* shall be provided with an *accessible* entrance from the exterior of the structure and all units *intended to be occupied as a residence* on that *story* shall be *Type B units*.

1107.7.1.2 Additional stories with Type B units. On all other stories that have a building entrance in proximity to arrival points intended to serve units on that *story*, as indicated in Items 1 and 2, all *dwelling units* and *sleeping unit*s *intended to be occupied as a residence* served by that entrance on that *story* shall be *Type B units*.

1. Where the slopes of the undisturbed *site* measured between the planned entrance and all vehicular or pedestrian arrival points within 50 feet (15 240 mm) of the planned entrance are 10 percent or less, and
2. Where the slopes of the planned finished grade measured between the entrance and all vehicular or pedestrian arrival points within 50 feet (15 240 mm) of the planned entrance are 10 percent or less.

Where no such arrival points are within 50 feet (15 240 mm) of the entrance, the closest arrival point shall be used unless that arrival point serves the *story* required by Section 1107.7.1.1.

1107.7.2 Multistory units. A *multistory dwelling* or *sleeping unit* which is not provided with elevator service is not required to be a *Type B unit*. Where a *multistory unit* is provided with external elevator service to only one floor, the floor provided with elevator service shall be the primary entry to the unit, shall comply with the requirements for a *Type B unit* and a toilet facility shall be provided on that floor.

1107.7.3 Elevator service to the lowest story with units. Where elevator service in the building provides an *accessible route* only to the lowest *story* containing *dwelling* or *sleeping unit*s *intended to be occupied as a residence*, only the units on that *story* which are *intended to be occupied as a residence* are required to be *Type B units*.

1107.7.4 Site impracticality. On a *site* with multiple nonelevator buildings, the number of units required by Section 1107.7.1 to be *Type B units* is permitted to be reduced to a percentage which is equal to the percentage of the entire *site* having grades, prior to development, which are less than 10 percent, provided that all of the following conditions are met:

1. Not less than 20 percent of the units required by Section 1107.7.1 on the *site* are *Type B units*;
2. Units required by Section 1107.7.1, where the slope between the building entrance serving the units on that *story* and a pedestrian or vehicular arrival point is no greater than 8.33 percent, are *Type B units*;
3. Units required by Section 1107.7.1, where an elevated walkway is planned between a building entrance serving the units on that *story* and a pedestrian or vehicular arrival point and the slope between them is 10 percent or less are *Type B units*; and
4. Units served by an elevator in accordance with Section 1107.7.3 are *Type B units*.

1107.7.5 Design flood elevation. The required number of *Type A units* and *Type B units* shall not apply to a *site* where the required elevation of the lowest floor or the lowest horizontal structural building members of nonelevator buildings are at or above the *design flood elevation* resulting in:

1. A difference in elevation between the minimum required floor elevation at the primary entrances and

INTERNATIONAL CODE COUNCIL®
Copyright © 2014 ICC. ALL RIGHTS RESERVED. Accessed by William Munson on Jan 4, 2017 9:33:41 PM pursuant to License Agreement with ICC. No further reproduction or distribution authorized. ANY UNAUTHORIZED REPRODUCTION OR DISTRIBUTION IS A VIOLATION OF THE FEDERAL COPYRIGHT ACT AND THE LICENSE AGREEMENT, AND SUBJECT TO CIVIL AND CRIMINAL PENALTIES THEREUNDER.

vehicular and pedestrian arrival points within 50 feet (15 240 mm) exceeding 30 inches (762 mm), and

2. A slope exceeding 10 percent between the minimum required floor elevation at the primary entrances and vehicular and pedestrian arrival points within 50 feet (15 240 mm).

Where no such arrival points are within 50 feet (15 240 mm) of the primary entrances, the closest arrival points shall be used.

MNMNMNMNMNMNMNM **1107.7.6 Owner occupied units.** Type A units are not required in dwelling units or *sleeping units* where sale of the unit occurs prior to construction of the unit and the *dwelling unit* owner declines the Type A provisions. The dwelling units and *sleeping units* shall be *Type B units*.

SECTION 1108
SPECIAL OCCUPANCIES

1108.1 General. In addition to the other requirements of this chapter, the requirements of Sections 1108.2 through 1108.4 shall apply to specific occupancies.

MNMNMNMNMNMNMNMNMNMNMN **1108.2 Assembly area seating.** A building, room, or space used for assembly purposes with *fixed seating* shall comply with Sections 1108.2.1 to 1108.2.5. A building, room, or space used for assembly purposes with nonfixed seating shall comply with Section 1108.2.6. Assistive listening systems shall comply with Section 1108.2.7. Performance areas viewed from assembly seating areas shall comply with Section 1108.2.8. Dining areas shall comply with Section 1108.2.9.

1108.2.1 Services. If a service or facility is provided in an area that is not *accessible*, the same service or facility shall be provided on an *accessible* level and shall be *accessible*.

1108.2.2 Wheelchair spaces. In theaters, *bleachers*, *grandstands*, stadiums, arenas and other *fixed seating* assembly areas, *accessible wheelchair spaces* shall be provided in accordance with Sections 1108.2.2.1 through 1108.2.2.4.

1108.2.2.1 General seating. *Wheelchair spaces* shall be provided in accordance with Table 1108.2.2.1.

TABLE 1108.2.2.1
ACCESSIBLE WHEELCHAIR SPACES

CAPACITY OF SEATING IN ASSEMBLY AREAS	MINIMUM REQUIRED NUMBER OF WHEELCHAIR SPACES
4 to 25	1
26 to 50	2
51 to 100	4
101 to 300	5
301 to 500	6
501 to 5,000	6, plus 1 for each 150, or fraction thereof, between 501 through 5,000
5,001 and over	36 plus 1 for each 200, or fraction thereof, over 5,000

1108.2.2.2 Luxury boxes, club boxes and suites. In each luxury box, club box, and suite within arenas, stadiums and *grandstands*, *wheelchair spaces* shall be provided in accordance with Table 1108.2.2.1.

1108.2.2.3 Other boxes. In boxes other than those required to comply with Section 1108.2.2.2, the total number of *wheelchair spaces* provided shall be determined in accordance with Table 1108.2.2.1. *Wheelchair spaces* shall be located in not less than 20 percent of all boxes provided.

1108.2.2.4 Team or player seating. At least one *wheelchair space* shall be provided in team or player seating areas serving areas of sport activity.

Exception: *Wheelchair spaces* shall not be required in team or player seating areas serving bowling lanes that are not required to be located on an *accessible route* in accordance with Section 1109.15.4.1.

1108.2.3 Companion seats. At least one companion seat shall be provided for each *wheelchair space* required by Sections 1108.2.2.1 through 1108.2.2.3.

1108.2.4 Dispersion of wheelchair spaces in multilevel assembly seating areas. In *multilevel assembly seating* areas, *wheelchair spaces* shall be provided on the main floor level and on one of each two additional floor or *mezzanine* levels. *Wheelchair spaces* shall be provided in each luxury box, club box and suite within assembly facilities.

Exceptions:

1. In *multilevel assembly seating* areas utilized for worship services where the second floor or *mezzanine* level contains 25 percent or less of the total seating capacity, *wheelchair spaces* shall be permitted to all be located on the main level.
2. In *multilevel assembly seating* areas where the second floor or *mezzanine* level provides 25 percent or less of the total seating capacity and 300 or fewer seats, all *wheelchair spaces* shall be permitted to be located on the main level.
3. *Wheelchair spaces* in team or player seating serving areas of sport activity are not required to be dispersed.

1108.2.5 Designated aisle seats. At least 5 percent, but not less than one, of the total number of aisle seats provided shall be designated aisle seats and shall be the aisle seats located closest to *accessible routes*.

Exception: Designated aisle seats are not required in team or player seating serving areas of sport activity.

1108.2.6 Nonfixed seating. Seating areas where fixed seats are not provided shall connect to an *accessible route*. MNMMN

1108.2.7 Assistive listening systems. Each building, room or space used for assembly purposes where audible communications are integral to the use of the space shall have an assistive listening system.

Exception: Other than in courtrooms, an assistive listening system is not required where there is no audio amplification system.

INTERNATIONAL CODE COUNCIL®
Copyright © 2014 ICC. ALL RIGHTS RESERVED. Accessed by William Munson on Jan 4, 2017 9:33:41 PM pursuant to License Agreement with ICC. No further reproduction or distribution authorized. ANY UNAUTHORIZED REPRODUCTION OR DISTRIBUTION IS A VIOLATION OF THE FEDERAL COPYRIGHT ACT AND THE LICENSE AGREEMENT, AND SUBJECT TO CIVIL AND CRIMINAL PENALTIES THEREUNDER.

1108.2.7.1 Receivers. Receivers shall be provided for assistive listening systems in accordance with Table 1108.2.7.1.

Exceptions:

1. Where a building contains more than one room or space used for assembly purposes, the total number of required receivers shall be permitted to be calculated according to the total number of seats in the building, provided that all receivers are usable with all systems and if the rooms or spaces used for assembly purposes required to provide assistive listening are under one management.
2. Where all seats in a building, room or space used for assembly purposes are served by an induction loop assistive listening system, the minimum number of receivers required by Table 1108.2.7.1 to be hearing-aid compatible shall not be required.

1108.2.7.2 Ticket windows. Where ticket windows are provided in stadiums and arenas, at least one window at each location shall have an assistive listening system.

1108.2.7.3 Public address systems. Where stadiums, arenas and *grandstands* have 15,000 fixed seats or more and provide audible public announcements, they shall also provide prerecorded or real-time captions of those audible public announcements.

1108.2.8 Performance areas. An *accessible route* shall directly connect the performance area to the assembly seating area where a *circulation path* directly connects a performance area to an assembly seating area. An *accessible route* shall be provided from performance areas to ancillary areas or *facilities* used by performers.

1108.2.9 Dining and drinking areas. In dining and drinking areas, all interior and exterior floor areas shall be *accessible*.

Exceptions:

1. An *accessible route* between *accessible* levels and stories above or below is not required where permitted by Section 1104.4, Exception 1.
2. In buildings or *facilities* not required to provide an *accessible route* between stories, an *accessible route* to a *mezzanine* is not required, provided that the *mezzanine* contains less than 25 percent of the total area and the same services, decor and amenities are provided in the *accessible* area.
3. In sports facilities, tiered dining areas providing seating required to be *accessible* shall be required to have *accessible routes* serving at least 25 percent of the dining area, provided that *accessible routes* serve *accessible* seating and where each tier is provided with the same services.
4. Employee-only work areas shall comply with Sections 1103.2.3 and 1104.3.1.

1108.2.9.1 Dining surfaces. Where dining surfaces for the consumption of food or drink are provided, at least 5 percent, but not less than one, of the dining surfaces for the seating and standing spaces shall be *accessible* and be distributed throughout the facility and located on a level accessed by an *accessible route*.

1108.3 Self-service storage facilities. *Self-service storage facilities* shall provide *accessible* individual self-storage spaces in accordance with Table 1108.3.

TABLE 1108.3
ACCESSIBLE SELF-SERVICE STORAGE FACILITIES

TOTAL SPACES IN FACILITY	MINIMUM NUMBER OF REQUIRED ACCESSIBLE SPACES
1 to 200	5%, but not less than 1
Over 200	10, plus 2% of total number of units over 200

1108.3.1 Dispersion. *Accessible* individual self-service storage spaces shall be dispersed throughout the various classes of spaces provided. Where more classes of spaces are provided than the number of required *accessible* spaces, the number of *accessible* spaces shall not be required to exceed that required by Table 1108.3. *Accessible* spaces are permitted to be dispersed in a single building of a multibuilding facility.

1108.4 Judicial facilities. Judicial facilities shall comply with Sections 1108.4.1 through 1108.4.3.

TABLE 1108.2.7.1
RECEIVERS FOR ASSISTIVE LISTENING SYSTEMS

CAPACITY OF SEATING IN ASSEMBLY AREAS	MINIMUM REQUIRED NUMBER OF RECEIVERS	MINIMUM NUMBER OF RECEIVERS TO BE HEARING-AID COMPATIBLE
50 or less	2	2
51 to 200	2, plus 1 per 25 seats over 50 seats*	2
201 to 500	2, plus 1 per 25 seats over 50 seats*	1 per 4 receivers*
501 to 1,000	20, plus 1 per 33 seats over 500 seats*	1 per 4 receivers*
1,001 to 2,000	35, plus 1 per 50 seats over 1,000 seats*	1 per 4 receivers*
Over 2,000	55, plus 1 per 100 seats over 2,000 seats*	1 per 4 receivers*

Note: * = or fraction thereof

INTERNATIONAL CODE COUNCIL®
Copyright © 2014 ICC. ALL RIGHTS RESERVED. Accessed by William Munson on Jan 4, 2017 9:33:41 PM pursuant to License Agreement with ICC. No further reproduction or distribution authorized. ANY UNAUTHORIZED REPRODUCTION OR DISTRIBUTION IS A VIOLATION OF THE FEDERAL COPYRIGHT ACT AND THE LICENSE AGREEMENT, AND SUBJECT TO CIVIL AND CRIMINAL PENALTIES THEREUNDER.

1108.4.1 Courtrooms. Each courtroom shall be *accessible* and comply with Sections 1108.4.1.1 through 1108.4.1.5.

1108.4.1.1 Jury box. A *wheelchair space* shall be provided within the jury box.

Exception: Adjacent companion seating is not required.

1108.4.1.2 Gallery seating. *Wheelchair spaces* shall be provided in accordance with Table 1108.2.2.1. Designated aisle seats shall be provided in accordance with Section 1108.2.5.

1108.4.1.3 Assistive listening systems. An assistive listening system must be provided. Receivers shall be provided for the assistive listening system in accordance with Section 1108.2.7.1.

1108.4.1.4 Employee work stations. The judge's bench, clerk's station, bailiff's station, deputy clerk's station and court reporter's station shall be located on an accessible route. The vertical access to elevated employee work stations within a courtroom is not required at the time of initial construction, provided a *ramp*, lift or elevator can be installed without requiring reconfiguration or extension of the courtroom or extension of the electrical system.

1108.4.1.5 Other work stations. The litigant's and counsel stations, including the lectern, shall be *accessible*.

1108.4.2 Holding cells. Central holding cells and court-floor holding cells shall comply with Sections 1108.4.2.1 and 1108.4.2.2.

1108.4.2.1 Central holding cells. Where separate central holding cells are provided for adult males, juvenile males, adult females or juvenile females, one of each type shall be *accessible*. Where central holding cells are provided and are not separated by age or sex, at least one *accessible* cell shall be provided.

1108.4.2.2 Court-floor holding cells. Where separate court-floor holding cells are provided for adult males, juvenile males, adult females or juvenile females, each courtroom shall be served by one *accessible* cell of each type. Where court-floor holding cells are provided and are not separated by age or sex, courtrooms shall be served by at least one *accessible* cell. *Accessible* cells shall be permitted to serve more than one courtroom.

1108.4.3 Visiting areas. Visiting areas shall comply with Sections 1108.4.3.1 and 1108.4.3.2.

1108.4.3.1 Cubicles and counters. At least 5 percent but no fewer than one of the cubicles shall be *accessible* on both the visitor and detainee sides. Where counters are provided, at least one shall be *accessible* on both the visitor and detainee sides.

Exception: This requirement shall not apply to the detainee side of cubicles or counters at noncontact visiting areas not serving *accessible* holding cells.

1108.4.3.2 Partitions. Where solid partitions or security glazing separate visitors from detainees, at least one of each type of cubicle or counter partition shall be *accessible*.

SECTION 1109
OTHER FEATURES AND FACILITIES

1109.1 General. *Accessible* building features and *facilities* shall be provided in accordance with Sections 1109.2 to 1109.19. MNMNMNMNMNMNMNM

Exception: *Accessible* units, Type A units, and *Type B units* shall comply with Chapter 10 of ICC All7.1.

1109.2 Toilet and bathing facilities. Each toilet room and bathing room shall be *accessible*. Where a floor level is not required to be connected by an *accessible route*, the only toilet rooms or bathing rooms provided within the facility shall not be located on the inaccessible floor. At least one of each type of fixture, element, control or dispenser in each *accessible* toilet room and bathing room shall be *accessible*.

Exceptions:

1. In toilet rooms or bathing rooms accessed only through a private office, not for *common* or *public use* and intended for use by a single occupant, any of the following alternatives are allowed:
   1.1. Doors are permitted to swing into the clear floor space, provided the door swing can be reversed to meet the requirements in ICC A117.1;
   1.2. The height requirements for the water closet in ICC A117.1 are not applicable;
   1.3. Grab bars are not required to be installed in a toilet room, provided that reinforcement has been installed in the walls and located so as to permit the installation of such grab bars; and
   1.4. The requirement for height, knee and toe clearance shall not apply to a lavatory.
2. This section is not applicable to toilet and bathing rooms that serve *dwelling units* or *sleeping unit*s that are not required to be *accessible* by Section 1107.
3. Where multiple single-user toilet rooms or bathing rooms are clustered at a single location, at least 50 percent but not less than one room for each use at each cluster shall be *accessible*.
4. Where no more than one urinal is provided in a toilet room or bathing room, the urinal is not required to be *accessible*.
5. Toilet rooms that are part of critical care or intensive care patient sleeping rooms are not required to be *accessible*.
6. Where toilet facilities are primarily for children's use, required *accessible* water closets, toilet compartments and lavatories shall be permitted to comply with the children's provisions of ICC A117.1.

INTERNATIONAL CODE COUNCIL®
Copyright © 2014 ICC. ALL RIGHTS RESERVED. Accessed by William Munson on Jan 4, 2017 9:33:41 PM pursuant to License Agreement with ICC. No further reproduction or distribution authorized. ANY UNAUTHORIZED REPRODUCTION OR DISTRIBUTION IS A VIOLATION OF THE FEDERAL COPYRIGHT ACT AND THE LICENSE AGREEMENT, AND SUBJECT TO CIVIL AND CRIMINAL PENALTIES THEREUNDER.

1109.2.1 Family or assisted-use toilet and bathing rooms. In assembly and mercantile occupancies, an *accessible* family or assisted-use toilet room shall be provided where an aggregate of six or more male and female water closets is required. In buildings of mixed occupancy, only those water closets required for the assembly or mercantile occupancy shall be used to determine the family or assisted-use toilet room requirement. In recreational facilities where separate-sex bathing rooms are provided, an *accessible* family or assisted-use bathing room shall be provided. Fixtures located within family or assisted-use toilet and bathing rooms shall be included in determining the number of fixtures provided in an occupancy.

Exception: Where each separate-sex bathing room has only one shower or bathtub fixture, a family or assisted-use bathing room is not required.

1109.2.1.1 Standard. Family or assisted-use toilet and bathing rooms shall comply with Sections 1109.2.1.2 through 1109.2.1.7.

1109.2.1.2 Family or assisted-use toilet rooms. Family or assisted-use toilet rooms shall include only one water closet and only one lavatory. A family or assisted-use bathing room in accordance with Section 1109.2.1.3 shall be considered a family or assisted-use toilet room.

Exception: A urinal is permitted to be provided in addition to the water closet in a family or assisted-use toilet room.

1109.2.1.3 Family or assisted-use bathing rooms. Family or assisted-use bathing rooms shall include only one shower or bathtub fixture. Family or assisted-use bathing rooms shall also include one water closet and one lavatory. Where storage facilities are provided for separate-sex bathing rooms, *accessible* storage facilities shall be provided for family or assisted-use bathing rooms.

1109.2.1.4 Location. Family or assisted-use toilet and bathing rooms shall be located on an *accessible route*. Family or assisted-use toilet rooms shall be located not more than one *story* above or below separate-sex toilet rooms. The *accessible route* from any separate-sex toilet room to a family or assisted-use toilet room shall not exceed 500 feet (152 m).

MNMNMNM

1109.2.1.5 Prohibited location. The *accessible* route from separate-sex toilet rooms to a family or assisted-use toilet room shall not pass through security checkpoints.

1109.2.1.6 Clear floor space. Where doors swing into a family or assisted-use toilet or bathing room, a clear floor space not less than 30 inches by 48 inches (762 mm by 1219 mm) shall be provided, within the room, beyond the area of the door swing.

1109.2.1.7 Privacy. Doors to family or assisted-use toilet and bathing rooms shall be securable from within the room.

MNMMN

1109.2.2 Water closet compartment. Where water closet compartments are provided in a toilet room or bathing room, at least one wheelchair-*accessible* compartment shall be provided. Where two or more water closet compartments are provided in a toilet room or bathing room, at least one ambulatory-*accessible* water closet compartment shall be provided in addition to the wheelchair-*accessible* compartment.

MNMNMNMNMNM

1109.2.3 Lavatories. Where lavatories are provided, at least 5 percent, but not less than one, shall be *accessible*. Where the total lavatories provided in a toilet room or bathing facility is six or more, at least one lavatory with enhanced reach ranges shall be provided.

1109.3 Sinks. Where sinks are provided, at least 5 percent but not less than one provided in *accessible* spaces shall be *accessible*.

Exception: Deleted.

1109.4 Kitchens and kitchenettes. Where kitchens and kitchenettes are provided in *accessible* spaces or rooms, they shall be *accessible*.

Exception: Where multiple kitchens are provided in a space or room, at least one kitchen shall be *accessible*.

MNMN

1109.5 Drinking fountains. Where drinking fountains are provided on an exterior site, on a floor or within a secured area, the drinking fountains shall be provided in accordance with Sections 1109.5.1 and 1109.5.2.

1109.5.1 Minimum number. No fewer than two drinking fountains shall be provided. One drinking fountain shall comply with the requirements for people who use a wheelchair and one drinking fountain shall comply with the requirements for standing persons.

Exceptions:

1. A single drinking fountain that complies with the requirements for people who use a wheelchair and standing persons shall be permitted to be substituted for two separate drinking fountains.
2. Where drinking fountains are primarily for children's use, drinking fountains for people using wheelchairs shall be permitted to comply with the children's provisions in ICC A117.1 and drinking fountains for standing children shall be permitted to provide the spout at 30 inches (762 mm) minimum above the floor.

1109.5.2 More than the minimum number. Where more than the minimum number of drinking fountains specified in Section 1109.5.1 are provided, 50 percent of the total number of drinking fountains provided shall comply with the requirements for persons who use a wheelchair and 50 percent of the total number of drinking fountains provided shall comply with the requirements for standing persons.

Exceptions:

1. Where 50 percent of the drinking fountains yields a fraction, 50 percent shall be permitted to be rounded up or down, provided that the total number of drinking fountains complying with this section equals 100 percent of the drinking fountains.

INTERNATIONAL CODE COUNCIL®
Copyright © 2014 ICC. ALL RIGHTS RESERVED. Accessed by William Munson on Jan 4, 2017 9:33:41 PM pursuant to License Agreement with ICC. No further reproduction or distribution authorized. ANY UNAUTHORIZED REPRODUCTION OR DISTRIBUTION IS A VIOLATION OF THE FEDERAL COPYRIGHT ACT AND THE LICENSE AGREEMENT, AND SUBJECT TO CIVIL AND CRIMINAL PENALTIES THEREUNDER.

2. Where drinking fountains are primarily for children's use, drinking fountains for people using wheelchairs shall be permitted to comply with the children's provisions in ICC A117.1 and drinking fountains for standing children shall be permitted to provide the spout at 30 inches (762 mm) minimum above the floor.

1109.6 Swimming pools, wading pools, hot tubs, spas, saunas, and steam rooms. Common use and public use swimming pools, wading pools, hot tubs, spas, saunas, and steam rooms shall be *accessible*.

Exception: Where hot tubs, spas, saunas, or steam rooms are clustered at a single location, at least 5 percent but not less than one of each type in each cluster shall be *accessible*.

1109.7 Elevators. Passenger elevators on an *accessible route* shall be *accessible* and comply with Minnesota Rules, Chapter 1307, Minnesota Elevators and Related Devices.

1109.8 Lifts. Platform (wheelchair) lifts are permitted to be a part of a required *accessible route* in new construction where indicated in items 1 to 11. Platform (wheelchair) lifts shall be *accessible* and comply with Minnesota Rules, Chapter 1307, Minnesota Elevators and Related Devices.

1. An *accessible route* to a performing area and speaker platforms in Group A occupancies.
2. An *accessible route* to *wheelchair spaces* required to comply with the wheelchair space dispersion requirements of Sections 1108.2.2 to 1108.2.6 or the accessible route requirements of Sections 1104.4.3 and 1104.4.4.
3. An *accessible route* to spaces that are not open to the general public with an *occupant load* of not more than five.
4. An *accessible route* within a *dwelling* or *sleeping unit*.
5. An *accessible route* to wheelchair seating spaces located in outdoor dining terraces in Group A-5 occupancies where the *means of egress* from the dining terraces to a *public way* are open to the outdoors.
6. An *accessible route* to jury boxes and witness stands; raised courtroom stations including judges' benches, clerks' stations, bailiffs' stations, deputy clerks' stations and court reporters' stations; and to depressed areas such as the well of the court.
7. An *accessible route* to load and unload areas serving amusement rides.
8. An *accessible route* to play components or soft contained play *structures*.
9. An *accessible route* to team or player seating areas serving areas of sport activity.
10. An *accessible route* where existing exterior *site* constraints make use of a *ramp* or elevator infeasible.
11. An *accessible route* within a tenant space as required in Section 1104.5 where the area accessed by the lift has an *occupant load* of 150 maximum or where the structural limitations make use of an elevator impracticable.

1109.9 Storage. Where fixed or built-in storage elements such as cabinets, coat hooks, shelves, medicine cabinets, lockers, closets and drawers are provided in required *accessible* spaces, at least 5 percent, but not less than one of each type shall be *accessible*.

1109.9.1 Equity. *Accessible* facilities and spaces shall be provided with the same storage elements as provided in the similar nonaccessible facilities and spaces.

1109.9.2 Shelving and display units. Self-service shelves and display units shall be located on an *accessible route*. Such shelving and display units shall not be required to comply with reach-range provisions.

1109.10 Detectable warnings. Passenger transit platform edges bordering a drop-off and not protected by platform screens or *guards* and circulation paths that cross tracks shall have a *detectable warning*.

Exception: Detectable warnings are not required at bus stops.

1109.11 Seating at tables, counters and work surfaces. Where seating or standing space at fixed or built-in tables, counters or work surfaces is provided in *accessible* spaces, at least 5 percent of the seating and standing spaces, but not less than one, shall be *accessible*. In Group I-3 occupancy visiting areas at least 5 percent, but not less than one, cubicle or counter shall be *accessible* on both the visitor and detainee sides.

Exceptions:

1. Check-writing surfaces at check-out aisles not required to comply with Section 1109.11.2 are not required to be *accessible*.
2. In Group I-3 occupancies, the counter or cubicle on the detainee side is not required to be *accessible* at noncontact visiting areas or in areas not serving *accessible* holding cells or *sleeping unit*s.

1109.11.1 Dispersion. *Accessible* fixed or built-in seating at tables, counters or work surfaces shall be distributed throughout the space or facility containing such elements and located on a level accessed by an *accessible route*.

1109.12 Service facilities. Service facilities shall provide for *accessible* features in accordance with Sections 1109.12.1 through 1109.12.5.

1109.12.1 Dressing, fitting and locker rooms. Where dressing rooms, fitting rooms or locker rooms are provided, at least 5 percent, but not less than one, of each type of use in each cluster provided shall be *accessible*.

1109.12.2 Check-out aisles. Where check-out aisles are provided, *accessible* check-out aisles shall be provided in accordance with Table 1109.12.2. Where check-out aisles serve different functions, at least one *accessible* check-out aisle shall be provided for each function. Where check-out aisles serve different functions, *accessible* check-out aisles shall be provided in accordance with Table 1109.12.2 for each function. Where check-out aisles are dispersed throughout the building or facility, *accessible* check-out aisles shall also be dispersed. Traffic control devices,

INTERNATIONAL CODE COUNCIL®
Copyright © 2014 ICC. ALL RIGHTS RESERVED. Accessed by William Munson on Jan 4, 2017 9:33:41 PM pursuant to License Agreement with ICC. No further reproduction or distribution authorized. ANY UNAUTHORIZED REPRODUCTION OR DISTRIBUTION IS A VIOLATION OF THE FEDERAL COPYRIGHT ACT AND THE LICENSE AGREEMENT, AND SUBJECT TO CIVIL AND CRIMINAL PENALTIES THEREUNDER.

security devices and turnstiles located in *accessible* check-out aisles or lanes shall be *accessible*.

TABLE 1109.12.2
ACCESSIBLE CHECK-OUT AISLES

TOTAL CHECK-OUT AISLES OF EACH FUNCTION	MINIMUM NUMBER OF ACCESSIBLE CHECK-OUT AISLES OF EACH FUNCTION
1 to 4	1
5 to 8	2
9 to 15	3
Over 15	3, plus 20% of additional aisles

1109.12.3 Point of sale and service counters. Where counters are provided for sales or distribution of goods or services, at least one of each type provided in each area shall be *accessible*. Where such counters are dispersed throughout the building or facility, *accessible* counters shall also be dispersed.

1109.12.4 Food service lines. Food service lines shall be *accessible*. Where self-service shelves are provided, at least 50 percent, but not less than one, of each type provided shall be *accessible*.

1109.12.5 Queue and waiting lines. Queue and waiting lines servicing *accessible* counters or check-out aisles shall be *accessible*.

1109.13 Controls, operating mechanisms and hardware. Controls, operating mechanisms and hardware intended for operation by the occupant, including switches that control lighting and ventilation and electrical convenience outlets, in *accessible* spaces, along *accessible routes* or as parts of *accessible* elements shall be *accessible*.

Exceptions:

1. Operable parts that are intended for use only by service or maintenance personnel shall not be required to be *accessible*.
2. Electrical or communication receptacles serving a dedicated use shall not be required to be *accessible*.
3. Where two or more outlets are provided in a kitchen above a length of counter top that is uninterrupted by a sink or appliance, one outlet shall not be required to be *accessible*.
4. Floor electrical receptacles shall not be required to be *accessible*.
5. HVAC diffusers shall not be required to be *accessible*.
6. Except for light switches, where redundant controls are provided for a single element, one control in each space shall not be required to be *accessible*.
7. Access doors or gates in barrier walls and fences protecting pools, spas and hot tubs shall be permitted to have operable parts of the release of latch on self-latching devices at 54 inches (1370 mm) maximum and 48 inches minimum above the finished floor or ground, provided the self-latching devices are not also self-locking devices, operated by means of a key, electronic opener, or integral combination lock.

1109.13.1 Operable window. Where operable windows are provided in rooms that are required to be *accessible* in accordance with Sections 1107.5.1.1, 1107.5.2.1, 1107.5.3.1, 1107.5.4, 1107.6.1.1, 1107.6.2.1.1, 1107.6.2.2.1 and 1107.6.4.1, at least one window in each room shall be *accessible* and each required operable window shall be *accessible*.

Exception: *Accessible* windows are not required in bathrooms and kitchens.

1109.14 Fuel-dispensing systems. Deleted.

1109.15 Recreational and sports facilities. Recreational and sports facilities shall be provided with *accessible* features in accordance with Sections 1109.15.1 through 1109.15.4.

1109.15.1 Facilities serving a single building. In Group R-2 and R-3 occupancies where recreational facilities are provided serving a single building containing *Type A units* or *Type B units*, 25 percent, but not less than one, of each type of recreational facility shall be *accessible*. Every recreational facility of each type on a site shall be considered to determine the total number of each type that is required to be *accessible*.

1109.15.2 Facilities serving multiple buildings. In Group R-2 and R-3 occupancies on a single *site* where multiple buildings containing *Type A units* or *Type B units* are served by recreational facilities, 25 percent, but not less than one, of each type of recreational facility serving each building shall be *accessible*. The total number of each type of recreational facility that is required to be *accessible* shall be determined by considering every recreational facility of each type serving each building on the site.

1109.15.3 Other occupancies. All recreational and sports facilities not falling within the purview of Section 1109.15.1 or 1109.15.2 shall be *accessible*.

1109.15.4 Recreational and sports facilities exceptions. Recreational and sports facilities required to be *accessible* shall be exempt from this chapter to the extent specified in this section.

1109.15.4.1 Bowling lanes. An *accessible route* shall be provided to at least 5 percent, but no less than one, of each type of bowling lane.

1109.15.4.2 Court sports. In court sports, at least one *accessible route* shall directly connect both sides of the court.

1109.15.4.3 Raised boxing or wrestling rings. Raised boxing or wrestling rings are not required to be *accessible*.

1109.15.4.4 Raised refereeing, judging and scoring areas. Raised structures used solely for refereeing, judging or scoring a sport are not required to be *accessible*.

1109.15.4.5 Raised diving boards and diving platforms. Raised diving boards and diving platforms are not required to be *accessible*.

INTERNATIONAL CODE COUNCIL®
Copyright © 2014 ICC. ALL RIGHTS RESERVED. Accessed by William Munson on Jan 4, 2017 9:33:41 PM pursuant to License Agreement with ICC. No further reproduction or distribution authorized. ANY UNAUTHORIZED REPRODUCTION OR DISTRIBUTION IS A VIOLATION OF THE FEDERAL COPYRIGHT ACT AND THE LICENSE AGREEMENT, AND SUBJECT TO CIVIL AND CRIMINAL PENALTIES THEREUNDER.

1109.16 Automatic teller and fare vending machines. Where automatic teller and fare vending machines are provided, at least one machine at each location shall be *accessible*. Where bins are provided for envelopes, wastepaper, or other purposes, at least one of each type shall be *accessible*.

1109.17 Public telephones. Where coin-operated public pay telephones, coinless public pay telephones, public closed-circuit telephones, courtesy telephones, or other types of public telephones are provided, public telephones shall be provided in accordance with Section 1109.17 for each type of public telephone provided. For purposes of this section, a bank of telephones shall be considered two or more adjacent telephones. For purposes of this section, "public building" means a building or portion of a building constructed by, on behalf of, or for the use of the state of Minnesota or any local government and any department, agency, public school district, special purpose district, or other instrumentality of the state or local government.

1109.17.1 Wheelchair accessible telephones. Where public telephones are provided, telephones complying with ICC Al17.1 shall be provided in accordance with Table 1109.17.1.

Exception: Drive-up only public telephones.

TABLE 1109.17.1
WHEELCHAIR ACCESSIBLE TELEPHONES

NUMBER OF TELEPHONE PROVIDED ON A FLOOR, LEVEL, OR EXTERIOR SITE	MINIMUM REQUIRED NUMBER OF WHEELCHAIR ACCESSIBLE TELEPHONES
1 or more single units	1 per floor, level, and exterior site
1 bank	1 per floor, level, and exterior site
2 or more banks	1 per bank

1109.17.2 Volume controls. All public telephones shall have volume controls complying with ICC A117.1.

1109.17.3 TTYs. TTYs complying with ICC A117.1 shall be provided in accordance with Section 1109.17.3.

1109.17.3.1 Bank requirement. Where four or more public pay telephones are provided at a bank of telephones, at least one public TTY complying with ICC All7.1 shall be provided at that bank.

Exception: TTYs shall not be required at banks of telephones located within 200 feet (61 m) of, and on the same floor as, a bank containing a public TTY.

1109.17.3.2 Floor requirement. TTYs in public buildings shall be provided in accordance with Section 1109.17.3.2.1. TTYs in private buildings shall be provided in accordance with Section 1109.16.3.2.2.

1109.17.3.2.1 Public buildings. Where at least one public pay telephone is provided on a floor of a public building, at least one public TTY shall be provided on that floor.

1109.17.3.2.2 Private buildings. Where four or more public pay telephones are provided on a floor of a private building, at least one public TTY shall be provided on that floor.

1109.17.3.3 Building requirement. TTYs in public buildings shall be provided in accordance with Section 1109.17.3.3.1. TTYs in private buildings shall be provided in accordance with Section 1109.17.3.3.2.

1109.17.3.3.1 Public buildings. Where at least one public pay telephone is provided in a public building, at least one public TTY shall be provided in the building.

1109.17.3.3.2 Private buildings. Where four or more public pay telephones are provided in a private building, at least one public TTY shall be provided in the building.

1109.17.3.4 Exterior site requirement. Where four or more public pay telephones are provided on an exterior site, at least one public TTY shall be provided on the site.

1109.17.3.5 Rest stops, emergency roadside stops, and service plazas. Where a public pay telephone is provided at a public rest stop, emergency roadside stop, or service plaza, at least one public TTY shall be provided.

1109.17.3.6 Hospitals. Where a public pay telephone is provided serving a hospital emergency room, hospital recovery room, or hospital waiting room, at least one public TTY shall be provided at each location.

1109.17.3.7 Transportation facilities. In addition to the requirements of Sections 1109.17.3.1 to 1109.17.3.4, in transportation facilities, where one public pay telephone serves a particular entrance to a bus or rail facility, a TTY shall be provided to serve that entrance. In airports, in addition to the requirements of Sections 1109.17.3.1 to 1109.17.3.4, if four or more public pay telephones are located in a terminal outside the security areas, a concourse within the security areas, or a baggage claim area in a terminal, at least one public TTY shall also be provided in each location.

1109.17.3.8 Detention and correctional facilities. In detention and correctional facilities, where a public pay telephone is provided in a secured area used only by detainees or inmates and security personnel, then at least one TTY shall be provided in at least one secured area.

1109.17.4 Shelves for portable TTYs. Where a bank of telephones in the interior of a building consists of three or more public pay telephones, at least one public pay telephone at the bank shall be provided with a shelf and an electrical outlet in accordance with ICC All7.l.

Exceptions:

1. Secured areas of detention and correctional facilities where shelves and outlets are prohibited for purposes of security or safety shall not be required to comply with Section 1109.17.4.
2. The shelf and electrical outlet shall not be required at a bank of telephones with a TTY.

1109.18 Airplane hangars. An *accessible route* and *accessible* entrance shall be provided to 5 percent of all airplane han-

INTERNATIONAL CODE COUNCIL®
Copyright © 2014 ICC. ALL RIGHTS RESERVED. Accessed by William Munson on Jan 4, 2017 9:33:41 PM pursuant to License Agreement with ICC. No further reproduction or distribution authorized. ANY UNAUTHORIZED REPRODUCTION OR DISTRIBUTION IS A VIOLATION OF THE FEDERAL COPYRIGHT ACT AND THE LICENSE AGREEMENT, AND SUBJECT TO CIVIL AND CRIMINAL PENALTIES THEREUNDER.

gars in a facility, but not less than one hangar used for the storage or repair of private aircraft.

1109.19 Two-way communication systems. Where a two-way communication system is provided to gain admittance to a building or facility or to restricted areas within a building or facility, the system shall comply with ICC A117.l.

SECTION 1110
SIGNAGE

1110.1 General. Signs shall be provided in accordance with Section 1110 and shall comply with ICC A117.1.

Exceptions:

1. Building directories, menus, seat and row designations in assembly areas, occupant names, building addresses, and company names and logos shall not be required to comply.
2. Temporary, seven days or less, signs shall not be required to comply.
3. In detention and correctional facilities, signs not located in public use areas shall not be required to comply.

1110.2 Designations. Interior and exterior signs identifying toilet rooms, bathing rooms, locker rooms, dressing rooms, fitting rooms, room numbers, and room names shall comply with ICC A117.1, Section 703.3. Where pictograms are provided, they shall comply with ICC A117.l, Section 703.5 and include text descriptors. The International Symbol of Accessibility complying with ICC A117.1, Section 703.6.3.1 shall be provided at the following locations:

1. *Accessible* passenger loading zones.
2. *Accessible* toilet and bathing rooms where not all such rooms are *accessible*.
3. *Accessible* dressing, fitting, and locker rooms where not all such rooms are *accessible*.

1110.2.1 Exterior signs. Exterior signs that are not located at the door to the space they serve shall comply with ICC A117.1, Section 703.2.

1110.3 Directional and informational signs. Signs that provide direction to or information about interior spaces and *facilities* of the site shall comply with ICC A117.1, Section 703.2.

1110.4 Means of egress. Signage providing instructions for the operation of exit doors shall comply with ICC A117.1, Section 703.2. Floor designations within *exit stairways* shall comply with ICC A117.1, Section 504.9. Other signs for *accessible means of egress* shall comply with IBC Chapter 10.

1110.5 Parking. *Accessible* parking spaces shall be identified by signs complying with ICC A117.1, Section 502.7.

Exception: In residential facilities, where parking spaces are assigned to specific residential dwelling units, identification of *accessible* parking spaces shall not be required.

1110.6 Entrances. Where not all entrances are *accessible*, *accessible* entrances shall be identified by the International Symbol of Accessibility complying with ICC A117.1, Section 703.6.3.l. Directional signs complying with ICC A117.1, Section 703.2, that indicate the location of the nearest *accessible* entrance shall be provided at all nonaccessible entrances.

1110.7 TTYs. TTY identification and directional signs shall be provided in accordance with Section 1110.7.

1110.7.1 Identification signs. Public TTYs shall be identified by the International Symbol of TTY complying with ICC A117.1, Section 703.6.3.2.

1110.7.2 Directional signs. Directional signs indicating the location of the nearest public TTY shall be provided at all banks of public pay telephones not containing a public TTY. In addition, where signs provide direction to public pay telephones, they shall also provide direction to public TTYs. Directional signs shall comply with ICC A117.1, Section 703.2, and shall include the International Symbol of TTY complying with ICC A117.1, Section 703.6.3.2.

1110.8 Assistive listening systems. Each assembly area required to provide assistive listening systems shall provide signs informing patrons of the availability of the assistive listening system. Assistive listening signs shall comply with ICC A117.1, Section 703.2, and shall include the International Symbol of Access for Hearing Loss complying with ICC A117.1, Section 703.6.3.3.

Exception: Where ticket offices or windows are provided, signs shall not be required at each assembly area provided that signs are displayed at each ticket office or window informing patrons of the availability of assistive listening systems.

1110.9 Check-out aisles. Where not all check-out aisles are *accessible*, *accessible* check-out aisles shall be identified by the International Symbol of Accessibility complying with ICC A117.1, Section 703.6.3.1. Signage at *accessible* check-out aisles shall be located in the same location as the nonaccessible check-out aisle identification.

Exception: Where all check-out aisles serving a single function are *accessible*, signs complying with ICC A117.1, Section 703.6.3.1, shall not be required.

1110.10 Variable message signs. Where provided in the locations in Sections 1110.10.1 and 1110.10.2, variable message signs (VMS) shall be *accessible*.

1110.10.1 Transportation facilities. Where provided in transportation facilities, variable message signs conveying transportation-related information shall comply with Section 1110.10.

1110.10.2 Emergency shelters. Where provided in buildings that are designated as emergency shelters, variable message signs conveying emergency-related information shall comply with Section 1110.10.

Exception: Where equivalent information is provided in an audible manner, VMS signs are not required to comply with Section 1110.10.

INTERNATIONAL CODE COUNCIL®
Copyright © 2014 ICC. ALL RIGHTS RESERVED. Accessed by William Munson on Jan 4, 2017 9:33:41 PM pursuant to License Agreement with ICC. No further reproduction or distribution authorized. ANY UNAUTHORIZED REPRODUCTION OR DISTRIBUTION IS A VIOLATION OF THE FEDERAL COPYRIGHT ACT AND THE LICENSE AGREEMENT, AND SUBJECT TO CIVIL AND CRIMINAL PENALTIES THEREUNDER.

SECTION 1111
ADDITIONS

1111.1 Minimum requirements. Accessibility provisions for new construction shall apply to additions. Each addition shall, to the maximum extent feasible, be located on an *accessible route* of travel from an *accessible* main entrance. An addition that affects the accessibility to an existing area of primary function shall, to the maximum extent feasible, provide an *accessible route* to the existing area of primary function. Existing space and space added by the addition shall be considered aggregately for the purpose of determining compliance with Section 1104.4. Existing toilet rooms, parking facilities, telephones, or drinking fountains that serve the addition shall be provided in accordance with Section 1112.7.

1111.2 Dwelling units and sleeping units. Where dwelling units or *sleeping units* are being added, the requirements of Section 1107 for *Accessible* units, Type A units, or *Type B units*, and Chapter 9 for *accessible* alarms, apply only to the quantity of spaces being added, until the number of units complies with the minimum number required for new construction.

SECTION 1112
ALTERATIONS

1112.1 Application. Where existing elements, spaces, features, or common areas are altered, then each altered element, space, feature, or common area shall comply with the applicable provision for new construction. If the applicable provision for new construction requires that an element, space, feature, or common area be on an *accessible route*, the altered element, space, feature, or common area shall be on an *accessible route* as provided in Section 1112.7.

1112.2 Extent of application. No alteration of an existing element, space, feature, or area of a building or facility shall impose a requirement for greater accessibility than that which would be required for new construction.

1112.3 Decrease accessibility. No alteration shall be undertaken that decreases or has the effect of decreasing accessibility or usability of a building or facility below the requirements for new construction at the time of alteration.

1112.4 Extent technically feasible. Where compliance with this section is technically infeasible, the alteration shall provide accessibility to the maximum extent feasible. Any elements or features of the building or facility that are being altered and can be made *accessible* shall be made *accessible* within the scope of the alteration.

1112.5 Addition of pedestrian route. Where a pedestrian route is installed where none existed previously, an *accessible route* shall be provided.

1112.6 Entrances. Where a planned alteration entails an alteration to a building entrance, and the building or facility has an *accessible* entrance, the altered entrance is not required to be *accessible* unless required by Section 1112.7. If a particular entrance is not made *accessible*, appropriate *accessible* signage indicating the location of the nearest *accessible* entrance shall be installed at or near the inaccessible entrance so that a person with disabilities will not be required to retrace the approach route from the inaccessible entrance.

1112.7 Alterations to an area containing a primary function. In addition to the requirements of Sections 1112.1 to 1112.6, an alteration that affects or could affect the usability of or access to an area containing a primary function shall be made to ensure that, to the maximum extent feasible, the path of travel to the altered area and the toilet rooms, parking facilities, telephones, and drinking fountains serving the altered area are *accessible*. The alterations to the path of travel, toilet rooms, parking facilities, telephones, and drinking fountains serving the altered area need not exceed 20 percent of the cost of the alteration to the primary function area.

Exceptions:

1. This provision does not apply to alterations limited solely to the electrical, mechanical, or plumbing system, or to hazardous material abatement or automatic sprinkler installation or retrofitting.
2. This provision does not apply to alterations limited solely to windows, hardware, operating controls, electrical outlets, and signs.
3. This provision does not apply to alterations undertaken for the primary purpose of increasing accessibility.
4. This provision does not apply to alterations undertaken by a tenant where the *accessible route*, toilet facilities, parking facilities, telephones, and drinking fountains are outside the tenant space.

1112.7.1 Priority for application. Priority for application of the 20 percent cost for the primary function area shall be as follows:

1. *Accessible* path of travel to the primary function area, such as exterior route, building entrance, interior route, or elevator;
2. *Accessible* toilet facilities;
3. *Accessible* parking;
4. *Accessible* telephones; and
5. *Accessible* drinking fountains.

1112.8 Special technical provisions for alterations to existing buildings and facilities. Alterations to existing buildings and *facilities* shall comply with Sections 1112.8.1 to 1112.8.10.

1112.8.1 Elevators. Altered elements of existing elevators shall be *accessible* and comply with Minnesota Rules, Chapter 1307, Minnesota Elevators and Related Devices. The elements shall also be altered in elevators programmed to respond to the same hall call control as the altered elevator.

1112.8.2 Platform lifts. Platform (wheelchair) lifts complying with ICC All7.1 and Minnesota Rules, Chapter 1307, Minnesota Elevators and Related Devices, shall be permitted to be used as part of an *accessible route*. Standby power shall be provided where a platform lift provides the only *accessible route* from a space listed in Section 1109.8.

INTERNATIONAL CODE COUNCIL®
Copyright © 2014 ICC. ALL RIGHTS RESERVED. Accessed by William Munson on Jan 4, 2017 9:33:41 PM pursuant to License Agreement with ICC. No further reproduction or distribution authorized. ANY UNAUTHORIZED REPRODUCTION OR DISTRIBUTION IS A VIOLATION OF THE FEDERAL COPYRIGHT ACT AND THE LICENSE AGREEMENT, AND SUBJECT TO CIVIL AND CRIMINAL PENALTIES THEREUNDER.

1112.8.3 Toilet rooms and bathing rooms. Toilet rooms and bathing rooms shall comply with Sections 1112.8.3.1 to 1112.8.3.3.

1112.8.3.1 Family or assisted-use toilet rooms and bathing rooms. Where it is technically infeasible to alter existing toilet rooms and bathing rooms to be *accessible*, at least one *accessible* family or assisted-use toilet room or bathing room shall be provided. The family or assisted-use toilet room or bathing room shall be located in the same area and be on the same floor as the existing toilet rooms and bathing rooms. Each family or assisted-use toilet room shall contain one water closet, one lavatory, and the door shall have a privacy latch. In addition, family or assisted-use bathing rooms shall contain one shower or bathtub fixture. Family or assisted-use toilet rooms and bathing rooms shall also be permitted to contain one urinal. All fixtures provided in the family or assisted-use room shall be *accessible*.

1112.8.3.1.1 Ambulatory compartment. In addition to the provisions of Section 1112.8.3.1, an ambulatory compartment shall be provided within the existing toilet room or bathing room, unless technically infeasible.

1112.8.3.2 Ambulatory compartment. Where it is technically infeasible to alter the existing toilet rooms and bathing rooms to be *accessible* or provide a family or assisted-use toilet room or bathing room in compliance with Section 1112.8.3.1, an ambulatory compartment with a minimum clear floor space of 48 inches (1220 mm) in front of the water closet shall be provided in the existing toilet room or bathing room, unless technically infeasible.

1112.8.3.3 Signage. Where existing toilet rooms or bathing rooms are not made *accessible*, directional signs indicating the location of the nearest *accessible* toilet room or *accessible* bathing room within the facility shall be provided. Signs shall comply with ICC A117.1, Section 703.2, and shall include the International Symbol of Accessibility complying with ICC Al17.1, Section 703.6.3.l. Where existing toilet rooms or bathing rooms are not *accessible*, the *accessible* toilet rooms or *accessible* bathing rooms shall be identified by the International Symbol of Accessibility.

1112.8.4 Assembly areas. Assembly areas shall comply with Sections 1112.8.4.1 and 1112.8.4.2.

1112.8.4.1 Wheelchair seating. Where it is technically infeasible to disperse *accessible* seating throughout an altered assembly area, *accessible* seating areas shall be permitted to be clustered. Each *accessible* seating area shall provide for companion seating and shall be located on an *accessible route*.

1112.8.4.2 Performance area. Where it is technically infeasible to alter all performing areas to be on an *accessible route*, at least one of each type of performing area shall be made *accessible*.

1112.8.5 Dressing, fitting, and locker rooms. Where dressing, fitting, and locker rooms are being altered and technical infeasibility can be demonstrated, one dressing, fitting, or locker room for each sex on each level shall be made *accessible*. Where only family or assisted-use rooms are provided, *accessible* family or assisted-use rooms shall be permitted.

1112.8.6 Dwelling units or sleeping units. Where dwelling units or *sleeping units* are being altered, the requirements of Section 1107 for *Accessible* units, Type A units, or *Type B units*, and Chapter 9 for *accessible* alarms apply only to the quantity of spaces being altered, until the number of units complies with the minimum number required for new construction.

1112.8.7 Check-out aisles. Where check-out aisles are altered, at least one of each type of check-out aisle serving each function shall be made *accessible* until the number of *accessible* check-out aisles complies with Section 1109.12.2.

1112.8.8 Jury boxes and witness stands. In alterations, *accessible wheelchair spaces* are not required to be located within the defined area of raised jury boxes or witness stands and shall be permitted to be located outside these spaces where the *ramp* or lift access restricts or projects into the means of egress.

1112.8.9 Historic buildings. Where alterations to provide accessibility to exterior and interior routes, ramps, entrances, or toilets are undertaken to a qualified historic building or facility that would threaten or destroy the historic significance of the building or facility, the alternative requirements in Sections 1112.8.9.1 to 1112.8.9.3 shall be permitted.

1112.8.9.1 Entrances. At least one *accessible* entrance that is used by the public shall be provided and located on an *accessible route*.

Exceptions:

1. If a main entrance cannot be made *accessible*, an *accessible* nonpublic entrance that is unlocked while the building is occupied shall be provided.
2. If a main entrance cannot be made *accessible* and compliance with Exception 1 is not feasible, a locked *accessible* entrance with a notification system or remote monitoring shall be provided.

1112.8.9.2 Toilet rooms. Where toilets are provided, at least one *accessible* toilet facility shall be provided along an *accessible route*. The toilet facility shall be permitted to be family or assisted-use in design.

1112.8.9.3 Accessible route. *Accessible* routes from an *accessible* entrance to all publicly used spaces on at least the level of the *accessible* entrance shall be provided. Access shall be provided to all levels of a building or facility whenever practical.

INTERNATIONAL CODE COUNCIL®
Copyright © 2014 ICC. ALL RIGHTS RESERVED. Accessed by William Munson on Jan 4, 2017 9:33:41 PM pursuant to License Agreement with ICC. No further reproduction or distribution authorized. ANY UNAUTHORIZED REPRODUCTION OR DISTRIBUTION IS A VIOLATION OF THE FEDERAL COPYRIGHT ACT AND THE LICENSE AGREEMENT, AND SUBJECT TO CIVIL AND CRIMINAL PENALTIES THEREUNDER.

1112.8.10 Parking restriping. Renewing existing parking striping shall be allowed. New striping, due to surface resurfacing, reconfiguration of parking spaces, or other reason, shall provide *accessible* spaces as applicable in Sections 1106.1 to 1106.7.

SECTION 1113
CHANGE OF OCCUPANCY

1113.1 General. Existing buildings or portions of buildings that undergo a change of group or occupancy classification shall comply with Section 1113.1.1 or 1113.1.2. No requirement for change of occupancy shall impose a requirement for greater accessibility than that which would be required for new construction. Platform (wheelchair) lifts complying with ICC A117.1 and Minnesota Rules, Chapter 1307, Minnesota Elevators and Related Devices, shall be permitted as a component of an *accessible route*. Standby power shall be provided where a platform lift provides the only *accessible route* from a space listed in Section 1109.8. A change of occupancy that incorporates any additions or alterations shall comply with Sections 1111 to 1113.

1113.1.1 Entire building. When a change of occupancy affects the entire building, the building shall have all of the following *accessible* features:

1. At least one *accessible* building entrance.
2. At least one *accessible route* from an *accessible* building entrance to primary function areas.
3. Signage complying with Section 1110.
4. *Accessible* parking, where parking is provided.
5. At least one *accessible* passenger loading zone, when loading zones are provided.
6. At least one *accessible route* connecting *accessible* parking and *accessible* passenger loading zones to an *accessible* entrance.
7. At least one *accessible* family or assisted-use toilet room or bathing room, or one *accessible* male and one *accessible* female toilet room or bathing room, located on an *accessible route* not more than one *story* above or one *story* below a floor without such *facilities*. Signage complying with Section 1112.8.3.3 shall be provided.

Where it is technically infeasible to comply with the new construction criteria for a change of occupancy, items 1 to 7 shall conform to the criteria to the maximum extent technically feasible.

1113.1.2 Portion of a building. When a change of occupancy affects a portion of the building, all of the following *accessible* features shall be provided:

1. At least one *accessible* building entrance.
2. At least one *accessible route* from an *accessible* building entrance to the portion of the building undergoing the change of occupancy. In multistory buildings where the portion of the building undergoing the change of occupancy is located above or below the level of access and the number of occupants of the new occupancy exceeds 30 occupants, an *accessible route* shall be provided.

   Exception: Regardless of *occupant load*, an *accessible route* shall be provided where the new occupancy is a public area of: a Group M occupancy; a medical care facility; a transportation facility; or a government or municipal facility.
3. *Accessible* parking, where parking is provided.
4. At least one *accessible route* from *accessible* parking to an *accessible* building entrance.
5. At least one *accessible* family or assisted-use toilet room or bathing room, or one *accessible* male and one *accessible* female toilet or bathing room, located on an *accessible route* not more than one *story* above or one *story* below the portion of the building undergoing the change in occupancy. Signage complying with Section 1112.8.3.3 shall be provided.

Where it is technically infeasible to comply with the new construction criteria for a change of occupancy, items 1 to 5 shall conform to the criteria to the maximum extent technically feasible.

INTERNATIONAL CODE COUNCIL®
Copyright © 2014 ICC. ALL RIGHTS RESERVED. Accessed by William Munson on Jan 4, 2017 9:33:41 PM pursuant to License Agreement with ICC. No further reproduction or distribution authorized. ANY UNAUTHORIZED REPRODUCTION OR DISTRIBUTION IS A VIOLATION OF THE FEDERAL COPYRIGHT ACT AND THE LICENSE AGREEMENT, AND SUBJECT TO CIVIL AND CRIMINAL PENALTIES THEREUNDER.

ACCESSIBILITY, TECHNICAL CRITERIA

(ICC/ANSI A117.1-2009 with MN Amendments) MN

CHAPTER 1

APPLICATION AND ADMINISTRATION

SECTION 101
PURPOSE

The technical criteria in Chapters 3 through 9, Sections 1002, 1003 and 1006 and Chapter 11 of this standard make sites, facilities, buildings and elements accessible to and usable by people with such physical disabilities as the inability to walk, difficulty walking, reliance on walking aids, blindness and visual impairment, deafness and hearing impairment, incoordination, reaching and manipulation disabilities, lack of stamina, difficulty interpreting and reacting to sensory information, and extremes of physical size. The intent of these sections is to allow a person with a physical disability to independently get to, enter, and use a site, facility, building, or element.

Section 1004 of this standard provides criteria for Type B units. These criteria are intended to be consistent with the intent of the criteria of the U.S. Department of Housing and Urban Development (HUD) Fair Housing Accessibility Guidelines. The Type B units are intended to supplement, not replace, Accessible units or Type A units as specified in this standard.

Section 1005 of this standard provides criteria for minimal accessibility features for one and two family dwelling units and townhouses which are not covered by the U.S. Department of Housing and Urban Development (HUD) Fair Housing Accessibility Guidelines.

This standard is intended for adoption by government agencies and by organizations setting model codes to achieve uniformity in the technical design criteria in building codes and other regulations.

101.1 Applicability. Sites, facilities, buildings, and elements required to be accessible shall comply with the applicable provisions of Chapters 3 through 9 and Chapter 11. Dwelling units and sleeping units shall comply with the applicable provisions of Chapter 10.

SECTION 102
ANTHROPOMETRIC PROVISIONS

The technical criteria in this standard are based on adult dimensions and anthropometrics. This standard also contains technical criteria based on children's dimensions and anthropometrics for drinking fountains, water closets, toilet compartments, lavatories and sinks, dining surfaces, work surfaces and benches.

SECTION 103
COMPLIANCE ALTERNATIVES

Nothing in this standard is intended to prevent the use of designs, products, or technologies as alternatives to those prescribed by this standard, provided they result in equivalent or greater accessibility and such equivalency is approved by the administrative authority adopting this standard.

SECTION 104
CONVENTIONS

104.1 General. Where specific criteria of this standard differ from the general criteria of this standard, the specific criteria shall apply.

104.2 Dimensions. Dimensions that are not stated as "maximum" or "minimum" are absolute. All dimensions are subject to conventional industry tolerances except where the dimension is stated as a range with specific minimum and maximum end points. MN MN MN MN MN MN MN MN

104.3 Figures. Unless specifically stated, figures included herein are provided for informational purposes only and are not considered part of the standard.

104.4 Floor or floor surface. The terms floor or floor surface refer to the finish floor surface or ground surface, as applicable.

104.5 Referenced sections. Unless specifically stated otherwise, a reference to another section or subsection within this standard includes all subsections of the referenced section or subsection.

SECTION 105
REFERENCED DOCUMENTS

105.1 General. The documents listed in Section 105.2 shall be considered part of this standard to the prescribed extent of each such reference. Where criteria in this standard differ from those of these referenced documents, the criteria of this standard shall apply.

105.2 Documents.

105.2.1 Manual on Uniform Traffic Control Devices: MUTCD-2003 (The Federal Highway Administration, Office of Transportation Operations, Room 3408, 400 7th Street, S.W., Washington, DC 20590).

105.2.2 National Fire Alarm Code: NFPA 72-2007 (National Fire Protection Association, 1 Batterymarch Park, Quincy, MA 02269-9101).

INTERNATIONAL CODE COUNCIL®
Copyright © 2014 ICC. ALL RIGHTS RESERVED. Accessed by William Munson on Jan 4, 2017 9:33:41 PM pursuant to License Agreement with ICC. No further reproduction or distribution authorized. ANY UNAUTHORIZED REPRODUCTION OR DISTRIBUTION IS A VIOLATION OF THE FEDERAL COPYRIGHT ACT AND THE LICENSE AGREEMENT, AND SUBJECT TO CIVIL AND CRIMINAL PENALTIES THEREUNDER.

Convention	Description
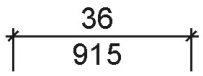	dimension showing English units (in inches unless otherwise specified) above the line and SI units (in millimeters unless otherwise specified) below the line
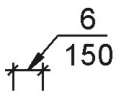	dimension for small measurements
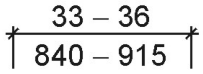	dimension showing a range with minimum – maximum
min	minimum
max	maximum
>	greater than
≥	greater than or equal to
<	less than
≤	less than or equal to
	boundary of clear floor space or maneuvering clearance
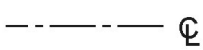	centerline
	a permitted element or its extension
	direction of travel or approach
	a wall, floor, ceiling or other element cut in section or plan
	a highlighted element in elevation or plan
	location zone of element, control or feature

FIGURE 104.3
GRAPHIC CONVENTION FOR FIGURES

105.2.3 Power Assist and Low Energy Power Operated Doors: ANSI/BHMA A156.19-2007. (Builders Hardware Manufacturers' Association, 355 Lexington Avenue, 15th Floor, New York, NY 10017).

105.2.4 Power Operated Pedestrian Doors: ANSI/BHMA A156.10-2005 (Builders Hardware Manufacturers' Association, 355 Lexington Avenue, 15th Floor, New York, NY 10017).

105.2.5 Safety Code For Elevators and Escalators: Deleted.

105.2.6 Safety Standard for Platform Lifts And Stairway Chairlifts: Deleted.

105.2.7 Performance Criteria for Accessible Communications Entry Systems. ANSI/DASMA 303-2006. (Door and Access Systems Manufacturers Association, 1300 Sumner Avenue, Cleveland, OH 44115-2851).

105.2.8 Standard Specification for Impact Attenuation of Surface Systems Under and Around Playground Equipment ASTM F 1292-99. (ASTM International, 100 Barr Harbor Drive, PO Box C700, West Conshohocken, PA, 19428-2959).

INTERNATIONAL CODE COUNCIL®
Copyright © 2014 ICC. ALL RIGHTS RESERVED. Accessed by William Munson on Jan 4, 2017 9:33:41 PM pursuant to License Agreement with ICC. No further reproduction or distribution authorized. ANY UNAUTHORIZED REPRODUCTION OR DISTRIBUTION IS A VIOLATION OF THE FEDERAL COPYRIGHT ACT AND THE LICENSE AGREEMENT, AND SUBJECT TO CIVIL AND CRIMINAL PENALTIES THEREUNDER.

105.2.9 Standard Specification for Impact Attenuation of Surfacing Materials Within the Use Zone of Playground Equipment ASTM F 1292-04. (ASTM International, 100 Barr Harbor Drive, PO Box C700, West Conshohocken, PA, 19428-2959).

105.2.10 Standard Consumer Safety Performance Specification for Playground Equipment for Public Use ASTM F 1487-01. (ASTM International, 100 Barr Harbor Drive, PO Box C700, West Conshohocken, PA, 19428-2959).

105.2.11 Americans with Disabilities Act (ADA) Accessibility Guidelines for Transportation Vehicles 36 CFR 1192 published in 56 Federal Register 45558, September 6, 1991 (United States Access Board, 1331 F Street, NW, Suite 1000, Washington, DC 20004-1111).

SECTION 106
DEFINITIONS

106.1 General. For the purpose of this standard, the terms listed in Section 106.5 have the indicated meaning.

106.2 Terms defined in referenced documents. Terms specifically defined in a referenced document, and not defined in this section, shall have the specified meaning from the referenced document.

106.3 Undefined terms. The meaning of terms not specifically defined in this standard or in a referenced document shall be as defined by collegiate dictionaries in the sense that the context implies.

106.4 Interchangeability. Words, terms, and phrases used in the singular include the plural, and those used in the plural include the singular.

106.5 Defined terms.

ACCESSIBLE. Describes a site, building, facility, or portion thereof that complies with this standard.

ADMINISTRATIVE AUTHORITY. A jurisdictional body that adopts or enforces regulations and standards for the design, construction, or operation of buildings and facilities.

AMUSEMENT ATTRACTION. Any facility, or portion of a facility, located within an amusement park or theme park which provides amusement without the use of an amusement device. Amusement attractions include, but are not limited to, fun houses, barrels, and other attractions without seats.

AMUSEMENT RIDE. A system that moves persons through a fixed course within a defined area for the purpose of amusement.

AMUSEMENT RIDE SEAT. A seat that is built-in or mechanically fastened to an amusement ride intended to be occupied by one or more passengers.

AREA OF SPORT ACTIVITY. That portion of a room or space where the play or practice of a sport occurs.

BOARDING PIER. A portion of a pier where a boat is temporarily secured for the purpose of embarking or disembarking.

BOAT LAUNCH RAMP. A sloped surface designed for launching and retrieving trailered boats and other water craft to and from a body of water.

BOAT SLIP. That portion of a pier, main pier, finger pier, or float where a boat is moored for the purpose of berthing, embarking, or disembarking.

CATCH POOL. A pool or designated section of a pool used as a terminus for water slide flumes.

CHARACTERS. Letters, numbers, punctuation marks, and typographic symbols.

CHILDREN'S USE. Spaces and elements specifically designed for use primarily by people 12 years old and younger.

CIRCULATION PATH. An exterior or interior way of passage from one place to another for pedestrians.

COUNTER SLOPE. Any slope opposing the running slope of a curb ramp.

CROSS SLOPE. The slope that is perpendicular to the direction of travel (see running slope).

CURB RAMP. A short ramp cutting through a curb or built up to it.

DESTINATION-ORIENTED ELEVATOR SYSTEM. An elevator system that provides lobby controls for the selection of destination floors, lobby indicators designating which elevator to board, and a car indicator designating the floors at which the car will stop.

DETECTABLE WARNING. A standardized surface feature built in or applied to floor surfaces to warn of hazards on a circulation path.

DWELLING UNIT. A single unit providing complete, independent living facilities for one or more persons including permanent provisions for living, sleeping, eating, cooking and sanitation.

ELEMENT. An architectural or mechanical component of a building, facility, space, or site.

ELEVATED PLAY COMPONENT. A play component that is approached above or below grade and that is part of a composite play structure consisting of two or more play components attached or functionally linked to create an integrated unit providing more than one play activity.

ELEVATOR CAR CALL SEQUENTIAL STEP SCANNING. A technology used to enter a car call by means of an up or down floor selection button.

FACILITY. All or any portion of a building, structure, site improvements, elements, and pedestrian routes or vehicular ways located on a site.

GANGWAY. A variable-sloped pedestrian walkway that links a fixed structure or land with a floating structure. Gangways that connect to vessels are not addressed by this document.

GOLF CAR PASSAGE. A continuous passage on which a motorized golf car can operate.

GROUND LEVEL PLAY COMPONENT. A play component that is approached and exited at the ground level.

INTERNATIONAL CODE COUNCIL®
Copyright © 2014 ICC. ALL RIGHTS RESERVED. Accessed by William Munson on Jan 4, 2017 9:33:41 PM pursuant to License Agreement with ICC. No further reproduction or distribution authorized. ANY UNAUTHORIZED REPRODUCTION OR DISTRIBUTION IS A VIOLATION OF THE FEDERAL COPYRIGHT ACT AND THE LICENSE AGREEMENT, AND SUBJECT TO CIVIL AND CRIMINAL PENALTIES THEREUNDER.

HABITABLE. A space in a building for living, sleeping, eating or cooking. Bathrooms, toilet rooms, closets, halls, storage or utility spaces and similar areas are not considered habitable spaces.

KEY SURFACE. The surface or plane of any key or button that must be touched to activate or deactivate an operable part or a machine function or enter data.

MARKED CROSSING. A crosswalk or other identified path intended for pedestrian use in crossing a vehicular way.

OPERABLE PART. A component of an element used to insert or withdraw objects, or to activate, deactivate, or adjust the element.

PICTOGRAM. A pictorial symbol that represents activities, facilities, or concepts.

PLAY AREA. A portion of a site containing play components designed and constructed for children.

PLAY COMPONENT. An element intended to generate specific opportunities for play, socialization, or learning. Play components are manufactured or natural; and are stand-alone or part of a composite play structure.

RAMP. A walking surface that has a running slope steeper than 1:20.

RUNNING SLOPE. The slope that is parallel to the direction of travel (see cross slope).

SIGN. An architectural element composed of displayed textual, symbolic, tactile, or pictorial information.

SITE. A parcel of land bounded by a property line or a designated portion of a public right-of-way.

SLEEPING UNIT. A room or space in which people sleep that can also include permanent provisions for living, sleeping, eating, and either sanitation or kitchen facilities but not both. Such rooms and spaces that are also part of a dwelling unit are not sleeping units.

SOFT CONTAINED PLAY STRUCTURE. A play structure made up of one or more play components where the user enters a fully enclosed play environment that utilizes pliable materials, such as plastic, netting, or fabric.

TEEING GROUND. In golf, the starting place for the hole to be played.

TRANSFER DEVICE. Equipment designed to facilitate the transfer of a person from a wheelchair or other mobility aide to and from an amusement ride seat.

TTY. An abbreviation for teletypewriter. Equipment that employs interactive, text-based communications through the transmission of coded signals across the standard telephone network. The term TTY also refers to devices known as text telephones and TDDs.

USE ZONE. The ground level area beneath and immediately adjacent to a play structure or play equipment that is designated by ASTM F 1487 listed in Section 105.2.10, for unrestricted circulation around the play equipment and where it is predicted that a user would land when falling from or exiting the play equipment.

VARIABLE MESSAGE SIGNS (VMS). Electronic signs that have a message with the capacity to change by means of scrolling, streaming, or paging across a background.

VARIABLE MESSAGE SIGN (VMS) CHARACTERS. Characters of an electronic sign are composed of pixels in an array. High resolution VMS characters have vertical pixel counts of 16 rows or greater. Low resolution VMS characters have vertical pixel counts of 7 to 15 rows.

VEHICULAR WAY. A route provided for vehicular traffic.

WALK. An exterior pathway with a prepared surface for pedestrian use.

WHEELCHAIR SPACE. A space for a single wheelchair and its occupant.

WHEELCHAIR SPACE LOCATIONS. A space for a minimum of a single wheelchair and the associated companion seating. Wheelchair space locations can contain multiple wheelchair spaces and associated companion seating.

INTERNATIONAL CODE COUNCIL®
Copyright © 2014 ICC. ALL RIGHTS RESERVED. Accessed by William Munson on Jan 4, 2017 9:33:41 PM pursuant to License Agreement with ICC. No further reproduction or distribution authorized. ANY UNAUTHORIZED REPRODUCTION OR DISTRIBUTION IS A VIOLATION OF THE FEDERAL COPYRIGHT ACT AND THE LICENSE AGREEMENT, AND SUBJECT TO CIVIL AND CRIMINAL PENALTIES THEREUNDER.

CHAPTER 2
SCOPING

SECTION 201
GENERAL

This standard provides technical criteria for making sites, facilities, buildings, and elements accessible. The scoping provisions provided in the *State Building Code* specify the extent to which these technical criteria apply. These scoping provisions shall address the application of this standard to: each building and occupancy type; new construction, alterations, temporary facilities, and existing buildings; specific site and building elements; and to multiple elements or spaces provided within a site or building.

SECTION 202
DWELLING AND SLEEPING UNITS

Chapter 10 contains dwelling unit and sleeping unit criteria for Accessible units, Type A units, Type B units, Type C (Visitable) dwelling units, and units with accessible communication features. The extent to which these technical criteria apply is provided in the scoping provisions of the *Minnesota State Building Code*. These scoping provisions address the types and numbers of units required to comply with each set of unit criteria.

SECTION 203
ADMINISTRATION

Deleted (see Minnesota Rules Chapter 1300 included herein).

INTERNATIONAL CODE COUNCIL®
Copyright © 2014 ICC. ALL RIGHTS RESERVED. Accessed by William Munson on Jan 4, 2017 9:33:41 PM pursuant to License Agreement with ICC. No further reproduction or distribution authorized. ANY UNAUTHORIZED REPRODUCTION OR DISTRIBUTION IS A VIOLATION OF THE FEDERAL COPYRIGHT ACT AND THE LICENSE AGREEMENT, AND SUBJECT TO CIVIL AND CRIMINAL PENALTIES THEREUNDER.

INTERNATIONAL CODE COUNCIL®
Copyright © 2014 ICC. ALL RIGHTS RESERVED. Accessed by William Munson on Jan 4, 2017 9:33:41 PM pursuant to License Agreement with ICC. No further reproduction or distribution authorized. ANY UNAUTHORIZED REPRODUCTION OR DISTRIBUTION IS A VIOLATION OF THE FEDERAL COPYRIGHT ACT AND THE LICENSE AGREEMENT, AND SUBJECT TO CIVIL AND CRIMINAL PENALTIES THEREUNDER.

CHAPTER 3
BUILDING BLOCKS

SECTION 301
GENERAL

301.1 Scope. The provisions of Chapter 3 shall apply where required by the scoping provisions adopted by the administrative authority or by Chapters 4 through 11.

301.2 Overlap. Unless otherwise specified, clear floor spaces, clearances at fixtures, maneuvering clearances at doors, and turning spaces shall be permitted to overlap.

SECTION 302
FLOOR SURFACES

302.1 General. Floor surfaces shall be stable, firm, and slip resistant, and shall comply with Section 302. Changes in level in floor surfaces shall comply with Section 303.

302.2 Carpet. Carpet or carpet tile shall be securely attached and shall have a firm cushion, pad, or backing or no cushion or pad. Carpet or carpet tile shall have a level loop, textured loop, level cut pile, or level cut/uncut pile texture. The pile shall be $^1/_2$ inch (13 mm) maximum in height. Exposed edges of carpet shall be fastened to the floor and shall have trim along the entire length of the exposed edge. Carpet edge trim shall comply with Section 303.

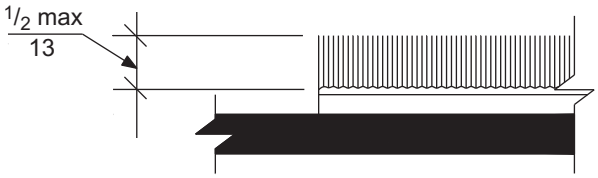

FIGURE 302.2
CARPET ON FLOOR SURFACES

302.3 Openings. Openings in floor surfaces shall be of a size that does not permit the passage of a $^1/_2$ inch (13 mm) diameter sphere, except as allowed in Sections 407.4.3, 408.4.3, 409.4.3, 410.4, and 805.10. Elongated openings shall be placed so that the long dimension is perpendicular to the predominant direction of travel.

SECTION 303
CHANGES IN LEVEL

303.1 General. Changes in level in floor surfaces shall comply with Section 303.

303.2 Vertical. Changes in level of $^1/_4$ inch (6.4 mm) maximum in height shall be permitted to be vertical.

303.3 Beveled. Changes in level greater than $^1/_4$ inch (6.4 mm) in height and not more than $^1/_2$ inch (13 mm) maximum in height shall be beveled with a slope not steeper than 1:2.

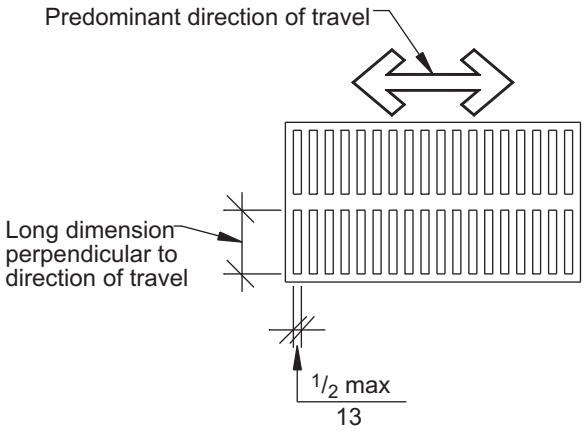

FIGURE 302.3
OPENINGS IN FLOOR SURFACES

FIGURE 303.2
VERTICAL CHANGES IN LEVEL

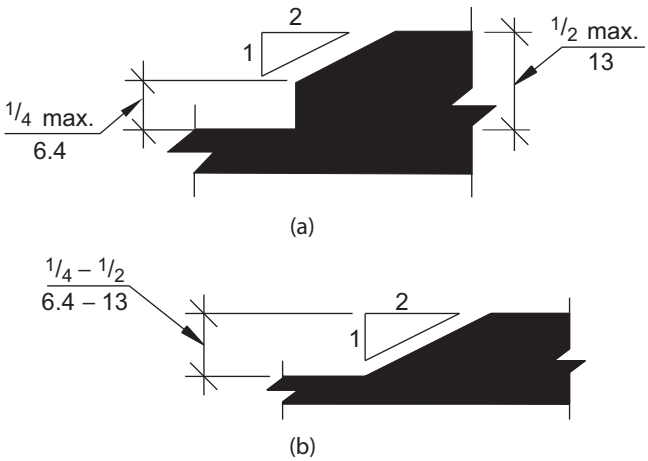

FIGURE 303.3
BEVELED CHANGES IN LEVEL

303.4 Ramps. Changes in level greater than $^1/_2$ inch (13 mm) in height shall be ramped and shall comply with Section 405 or 406.

INTERNATIONAL CODE COUNCIL®
Copyright © 2014 ICC. ALL RIGHTS RESERVED. Accessed by William Munson on Jan 4, 2017 9:33:41 PM pursuant to License Agreement with ICC. No further reproduction or distribution authorized. ANY UNAUTHORIZED REPRODUCTION OR DISTRIBUTION IS A VIOLATION OF THE FEDERAL COPYRIGHT ACT AND THE LICENSE AGREEMENT, AND SUBJECT TO CIVIL AND CRIMINAL PENALTIES THEREUNDER.

SECTION 304
TURNING SPACE

304.1 General. A turning space shall comply with Section 304.

304.2 Floor surface. Floor surfaces of a turning space shall comply with Section 302. Changes in level are not permitted within the turning space.

Exception: Slopes not steeper than 1:48 shall be permitted.

304.3 Size. Turning spaces shall comply with Section 304.3.1 or 304.3.2.

304.3.1 Circular space. The turning space shall be a circular space with a 60-inch (1525 mm) minimum diameter. The turning space shall be permitted to include knee and toe clearance complying with Section 306.

304.3.2 T-Shaped space. The turning space shall be a T-shaped space within a 60-inch (1525 mm) minimum square, with arms and base 36 inches (915 mm) minimum in width. Each arm of the T shall be clear of obstructions 12 inches (305 mm) minimum in each direction, and the base shall be clear of obstructions 24 inches (610 mm) minimum. The turning space shall be permitted to include knee and toe clearance complying with Section 306 only at the end of either the base or one arm.

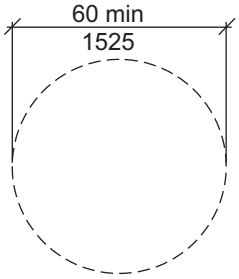

(a) Circular

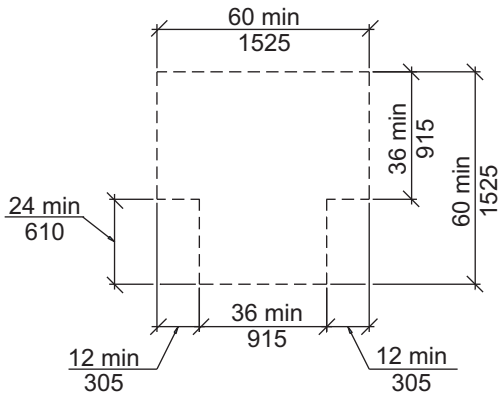

(b) T-shaped

FIGURE 304.3
SIZE OF TURNING SPACE

304.4 Door swing. Unless otherwise specified, doors shall be permitted to swing into turning spaces.

SECTION 305
CLEAR FLOOR SPACE

305.1 General. A clear floor space shall comply with Section 305.

305.2 Floor surfaces. Floor surfaces of a clear floor space shall comply with Section 302. Changes in level are not permitted within the clear floor space.

Exception: Slopes not steeper than 1:48 shall be permitted.

305.3 Size. The clear floor space shall be 48 inches (1220 mm) minimum in length and 30 inches (760 mm) minimum in width.

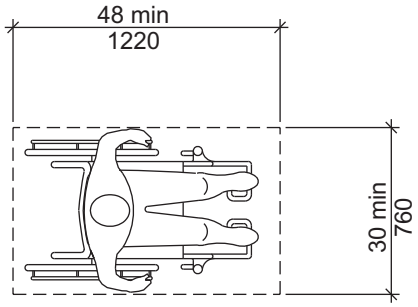

FIGURE 305.3
SIZE OF CLEAR FLOOR SPACE

305.4 Knee and toe clearance. Unless otherwise specified, clear floor space shall be permitted to include knee and toe clearance complying with Section 306.

305.5 Position. Unless otherwise specified, the clear floor space shall be positioned for either forward or parallel approach to an element.

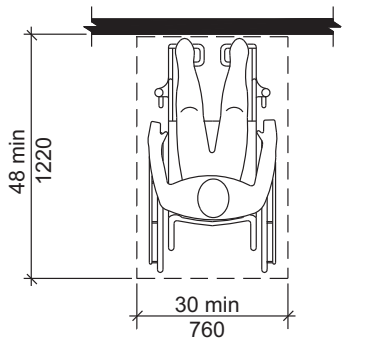

(a) Forward

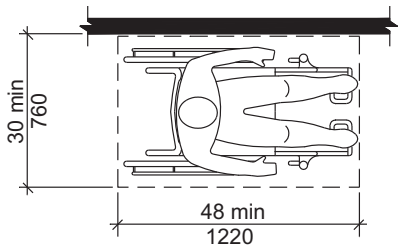

(b) Parallel

FIGURE 305.5
POSITION OF CLEAR FLOOR SPACE

INTERNATIONAL CODE COUNCIL®
Copyright © 2014 ICC. ALL RIGHTS RESERVED. Accessed by William Munson on Jan 4, 2017 9:33:41 PM pursuant to License Agreement with ICC. No further reproduction or distribution authorized. ANY UNAUTHORIZED REPRODUCTION OR DISTRIBUTION IS A VIOLATION OF THE FEDERAL COPYRIGHT ACT AND THE LICENSE AGREEMENT, AND SUBJECT TO CIVIL AND CRIMINAL PENALTIES THEREUNDER.

305.6 Approach. One full, unobstructed side of the clear floor space shall adjoin or overlap an accessible route or adjoin another clear floor space.

305.7 Alcoves. If a clear floor space is in an alcove or otherwise confined on all or part of three sides, additional maneuvering clearances complying with Sections 305.7.1 and 305.7.2 shall be provided, as applicable.

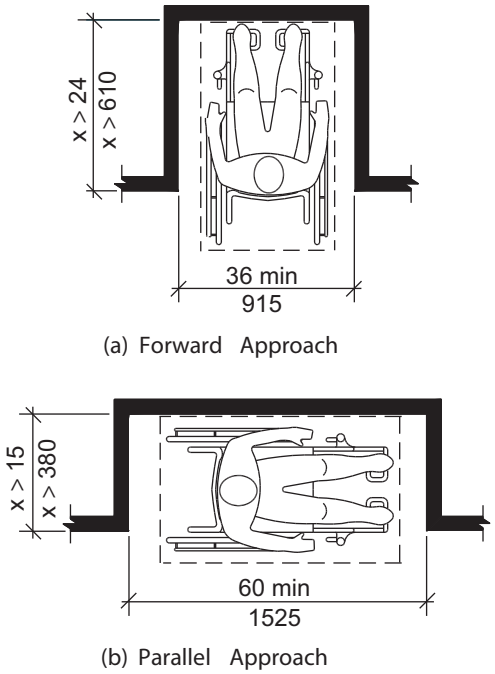

FIGURE 305.7
MANEUVERING CLEARANCE IN AN ALCOVE

305.7.1 Parallel approach. Where the clear floor space is positioned for a parallel approach, the alcove shall be 60 inches (1525 mm) minimum in width where the depth exceeds 15 inches (380 mm).

305.7.2 Forward approach. Where the clear floor space is positioned for a forward approach, the alcove shall be 36 inches (915 mm) minimum in width where the depth exceeds 24 inches (610 mm).

SECTION 306
KNEE AND TOE CLEARANCE

306.1 General. Where space beneath an element is included as part of clear floor space at an element, clearance at an element, or a turning space, the space shall comply with Section 306. Additional space shall not be prohibited beneath an element, but shall not be considered as part of the clear floor space or turning space.

306.2 Toe Clearance.

306.2.1 General. Space beneath an element between the floor and 9 inches (230 mm) above the floor shall be considered toe clearance and shall comply with Section 306.2.

306.2.2 Maximum depth. Toe clearance shall be permitted to extend 25 inches (635 mm) maximum under an element.

306.2.3 Minimum depth. Where toe clearance is required at an element as part of a clear floor space complying with Section 305, the toe clearance shall extend 17 inches (430 mm) minimum beneath the element.

306.2.4 Additional clearance. Space extending greater than 6 inches (150 mm) beyond the available knee clearance at 9 inches (230 mm) above the floor shall not be considered toe clearance.

306.2.5 Width. Toe clearance shall be 30 inches (760 mm) minimum in width.

306.3 Knee clearance.

306.3.1 General. Space beneath an element between 9 inches (230 mm) and 27 inches (685 mm) above the floor shall be considered knee clearance and shall comply with Section 306.3.

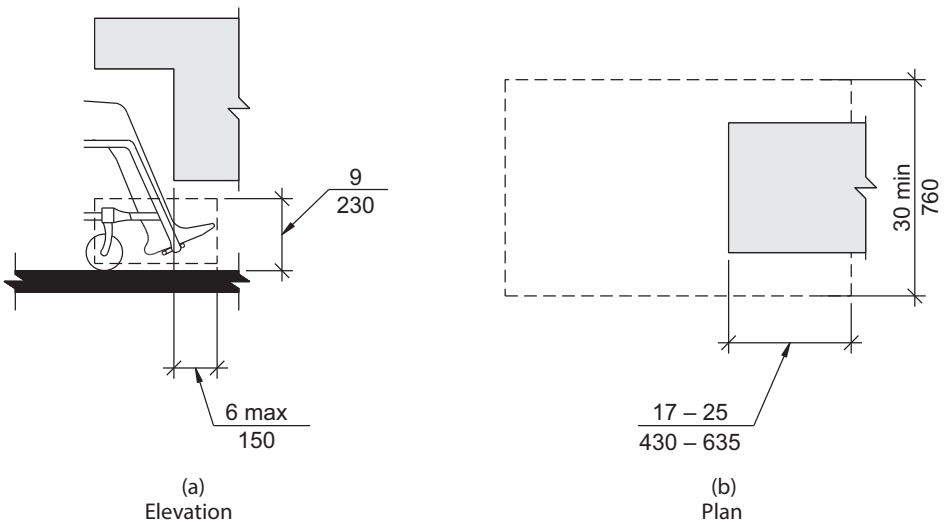

FIGURE 306.2
TOE CLEARANCE

INTERNATIONAL CODE COUNCIL®
Copyright © 2014 ICC. ALL RIGHTS RESERVED. Accessed by William Munson on Jan 4, 2017 9:33:41 PM pursuant to License Agreement with ICC. No further reproduction or distribution authorized. ANY UNAUTHORIZED REPRODUCTION OR DISTRIBUTION IS A VIOLATION OF THE FEDERAL COPYRIGHT ACT AND THE LICENSE AGREEMENT, AND SUBJECT TO CIVIL AND CRIMINAL PENALTIES THEREUNDER.

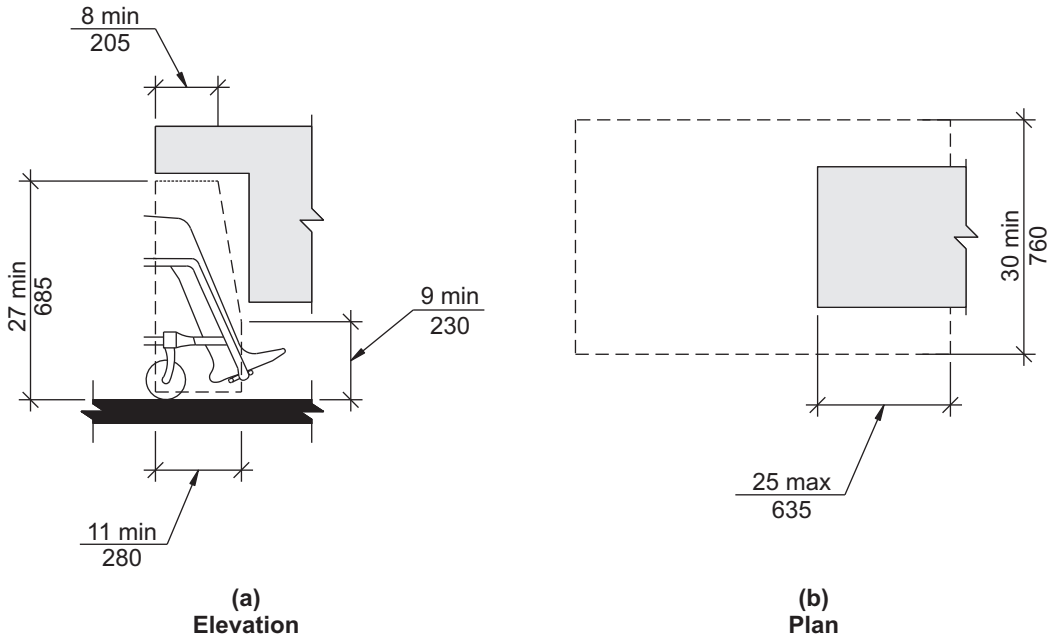

FIGURE 306.3
KNEE CLEARANCE

306.3.2 Maximum depth. Knee clearance shall be permitted to extend 25 inches (635 mm) maximum under an element at 9 inches (230 mm) above the floor.

306.3.3 Minimum depth. Where knee clearance is required beneath an element as part of a clear floor space complying with Section 305, the knee clearance shall be 11 inches (280 mm) minimum in depth at 9 inches (230 mm) above the floor, and 8 inches (205 mm) minimum in depth at 27 inches (685 mm) above the floor.

306.3.4 Clearance reduction. Between 9 inches (230 mm) and 27 inches (685 mm) above the floor, the knee clearance shall be permitted to be reduced at a rate of 1 inch (25 mm) in depth for each 6 inches (150 mm) in height.

306.3.5 Width. Knee clearance shall be 30 inches (760 mm) minimum in width.

SECTION 307
PROTRUDING OBJECTS

307.1 General. Protruding objects on circulation paths shall comply with Section 307.

307.2 Protrusion limits. Objects with leading edges more than 27 inches (685 mm) and not more than 80 inches (2030 mm) above the floor shall protrude 4 inches (100 mm) maximum horizontally into the circulation path.

Exception: Handrails shall be permitted to protrude $4^1/_2$ inches (115 mm) maximum.

307.3 Post-mounted objects. Objects on posts or pylons shall be permitted to overhang 4 inches (100 mm) maximum where more than 27 inches (685 mm) and not more than 80 inches (2030 mm) above the floor. Objects on multiple posts or pylons where the clear distance between the posts or pylons is greater than 12 inches (305 mm) shall have the lowest edge of such object either 27 inches (685 mm) maximum or 80 inches (2030 mm) minimum above the floor.

Exception: Sloping portions of handrails between the top and bottom riser of stairs and above the ramp run shall not be required to comply with Section 307.3.

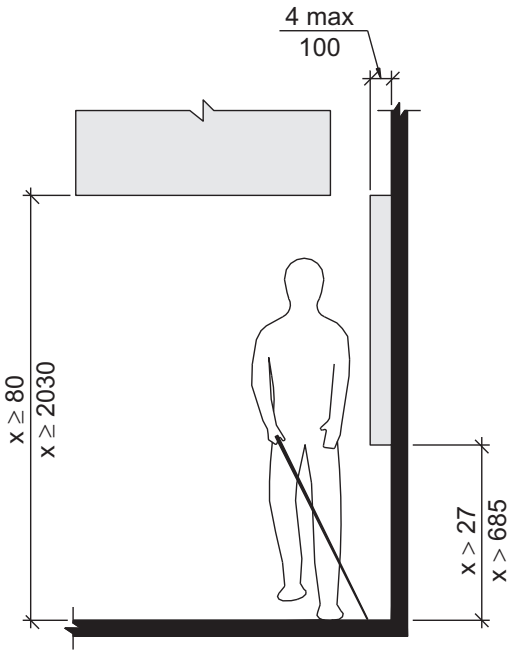

FIGURE 307.2
LIMITS OF PROTRUDING OBJECTS

INTERNATIONAL CODE COUNCIL®
Copyright © 2014 ICC. ALL RIGHTS RESERVED. Accessed by William Munson on Jan 4, 2017 9:33:41 PM pursuant to License Agreement with ICC. No further reproduction or distribution authorized. ANY UNAUTHORIZED REPRODUCTION OR DISTRIBUTION IS A VIOLATION OF THE FEDERAL COPYRIGHT ACT AND THE LICENSE AGREEMENT, AND SUBJECT TO CIVIL AND CRIMINAL PENALTIES THEREUNDER.

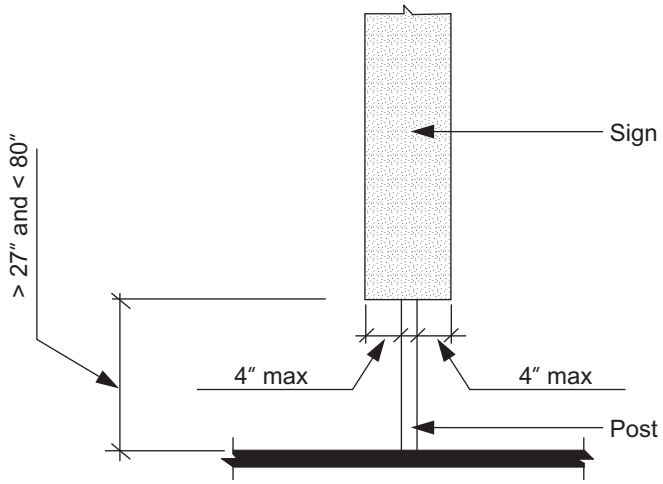

(a)

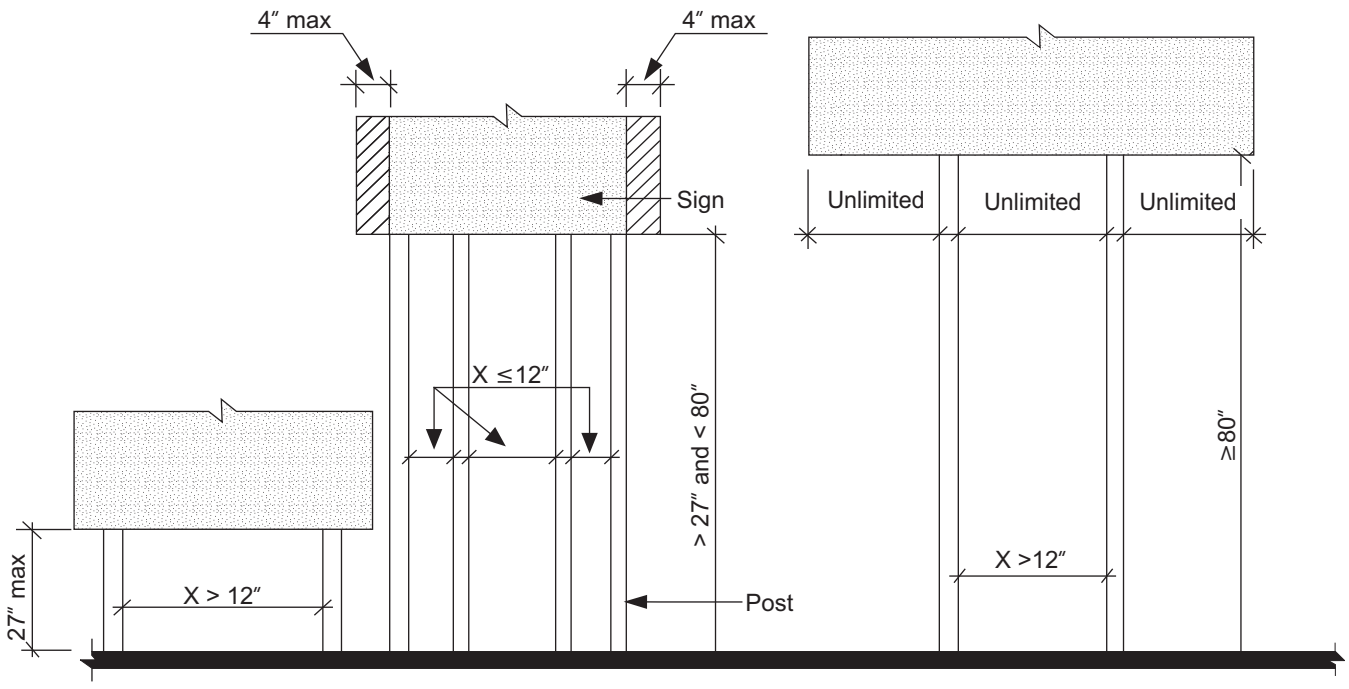

(b)

FIGURE 307.3
POST-MOUNTED PROTRUDING OBJECTS

INTERNATIONAL CODE COUNCIL®
Copyright © 2014 ICC. ALL RIGHTS RESERVED. Accessed by William Munson on Jan 4, 2017 9:33:41 PM pursuant to License Agreement with ICC. No further reproduction or distribution authorized. ANY UNAUTHORIZED REPRODUCTION OR DISTRIBUTION IS A VIOLATION OF THE FEDERAL COPYRIGHT ACT AND THE LICENSE AGREEMENT, AND SUBJECT TO CIVIL AND CRIMINAL PENALTIES THEREUNDER.

307.4 Vertical clearance. Vertical clearance shall be 80 inches (2030 mm) minimum. Rails or other barriers shall be provided where the vertical clearance is less than 80 inches (2030 mm). The leading edge of such rails or barrier shall be located 27 inches (685 mm) maximum above the floor.

Exception: Door closers and door stops shall be permitted to be 78 inches (1980 mm) minimum above the floor.

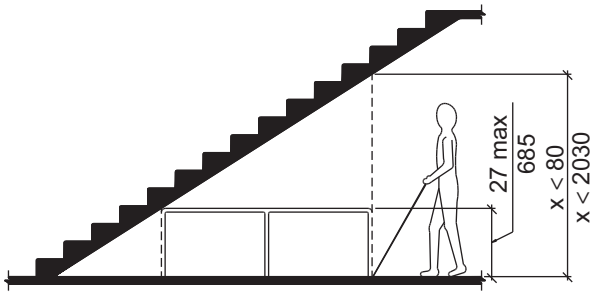

FIGURE 307.4
REDUCED VERTICAL CLEARANCE

307.5 Required clear width. Protruding objects shall not reduce the clear width required for accessible routes.

SECTION 308
REACH RANGES

308.1 General. Reach ranges shall comply with Section 308.

308.2 Forward reach.

308.2.1 Unobstructed. Where a forward reach is unobstructed, the high forward reach shall be 48 inches (1220 mm) maximum and the low forward reach shall be 15 inches (380 mm) minimum above the floor.

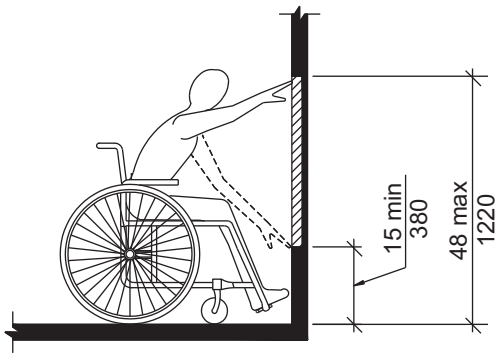

FIGURE 308.2.1
UNOBSTRUCTED FORWARD REACH

308.2.2 Obstructed high reach. Where a high forward reach is over an obstruction, the clear floor space complying with Section 305 shall extend beneath the element for a distance not less than the required reach depth over the obstruction. The high forward reach shall be 48 inches (1220 mm) maximum above the floor where the reach depth is 20 inches (510mm) maximum. Where the reach depth exceeds 20 inches (510 mm), the high forward reach shall be 44 inches (1120 mm) maximum above the floor, and the reach depth shall be 25 inches (635 mm) maximum.

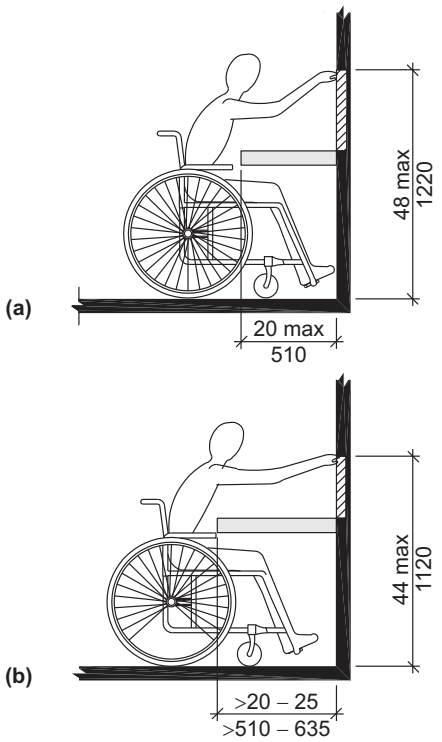

FIGURE 308.2.2
OBSTRUCTED HIGH FORWARD REACH

308.3 Side reach.

308.3.1 Unobstructed. Where a clear floor space complying with Section 305 allows a parallel approach to an element and the edge of the clear floor space is 10 inches (255 mm) maximum from the element, the high side reach shall be 48 inches (1220 mm) maximum and the low side reach shall be 15 inches (380 mm) minimum above the floor.

Exception: Existing elements that are not altered shall be permitted at 54 inches (1370 mm) maximum above the floor.

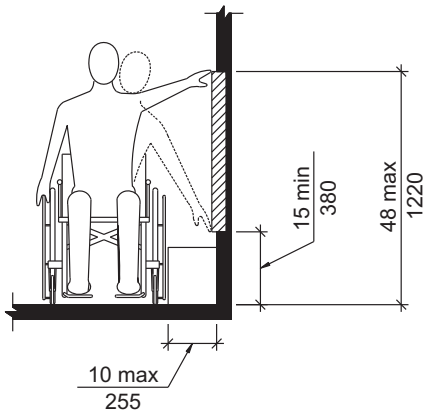

FIGURE 308.3.1
UNOBSTRUCTED SIDE REACH

INTERNATIONAL CODE COUNCIL®
Copyright © 2014 ICC. ALL RIGHTS RESERVED. Accessed by William Munson on Jan 4, 2017 9:33:41 PM pursuant to License Agreement with ICC. No further reproduction or distribution authorized. ANY UNAUTHORIZED REPRODUCTION OR DISTRIBUTION IS A VIOLATION OF THE FEDERAL COPYRIGHT ACT AND THE LICENSE AGREEMENT, AND SUBJECT TO CIVIL AND CRIMINAL PENALTIES THEREUNDER.

308.3.2 Obstructed high reach. Where a clear floor space complying with Section 305 allows a parallel approach to an element and the high side reach is over an obstruction, the height of the obstruction shall be 34 inches (865 mm) maximum above the floor and the depth of the obstruction shall be 24 inches (610 mm) maximum. The high side reach shall be 48 inches (1220 mm) maximum above the floor for a reach depth of 10 inches (255 mm) maximum. Where the reach depth exceeds 10 inches (255 mm), the high side reach shall be 46 inches (1170 mm) maximum above the floor for a reach depth of 24 inches (610 mm) maximum.

Exception: At washing machines and clothes dryers, the height of the obstruction shall be permitted to be 36 inches (915 mm) maximum above the floor.

SECTION 309
OPERABLE PARTS

309.1 General. Operable parts required to be accessible shall comply with Section 309.

309.2 Clear floor space. A clear floor space complying with Section 305 shall be provided.

309.3 Height. Operable parts shall be placed within one or more of the reach ranges specified in Section 308.

309.4 Operation. Operable parts shall be operable with one hand and shall not require tight grasping, pinching, or twisting of the wrist. The force required to activate operable parts shall be 5.0 pounds (22.2 N) maximum.

Exception: Gas pump nozzles shall not be required to provide operable parts that have an activating force of 5.0 pounds (22.2 N) maximum.

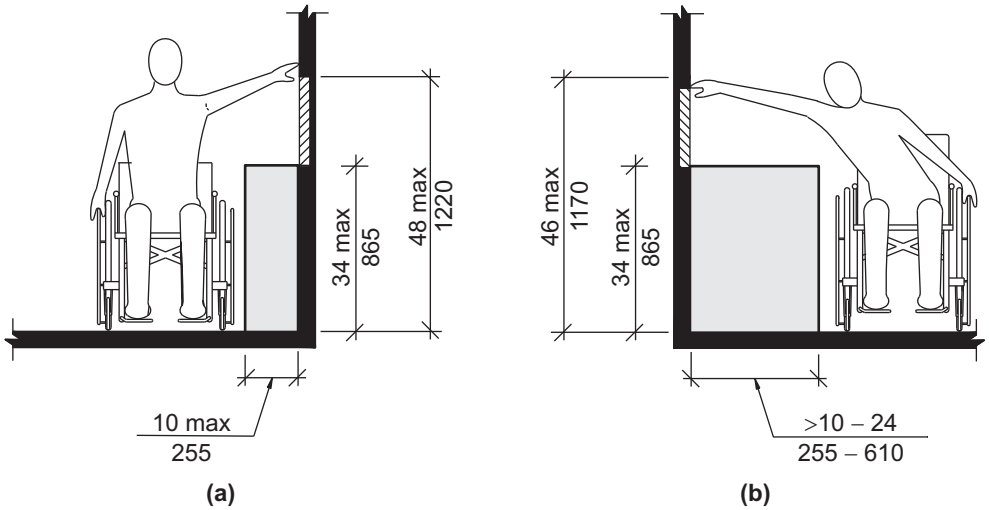

FIGURE 308.3.2
OBSTRUCTED HIGH SIDE REACH

INTERNATIONAL CODE COUNCIL®
Copyright © 2014 ICC. ALL RIGHTS RESERVED. Accessed by William Munson on Jan 4, 2017 9:33:41 PM pursuant to License Agreement with ICC. No further reproduction or distribution authorized. ANY UNAUTHORIZED REPRODUCTION OR DISTRIBUTION IS A VIOLATION OF THE FEDERAL COPYRIGHT ACT AND THE LICENSE AGREEMENT, AND SUBJECT TO CIVIL AND CRIMINAL PENALTIES THEREUNDER.

INTERNATIONAL CODE COUNCIL®
Copyright © 2014 ICC. ALL RIGHTS RESERVED. Accessed by William Munson on Jan 4, 2017 9:33:41 PM pursuant to License Agreement with ICC. No further reproduction or distribution authorized. ANY UNAUTHORIZED REPRODUCTION OR DISTRIBUTION IS A VIOLATION OF THE FEDERAL COPYRIGHT ACT AND THE LICENSE AGREEMENT, AND SUBJECT TO CIVIL AND CRIMINAL PENALTIES THEREUNDER.

CHAPTER 4
ACCESSIBLE ROUTES

SECTION 401
GENERAL

401.1 Scope. Accessible routes required by the scoping provisions adopted by the administrative authority shall comply with the applicable provisions of Chapter 4.

SECTION 402
ACCESSIBLE ROUTES

402.1 General. Accessible routes shall comply with Section 402.

402.2 Components. All components of an accessible route shall comply with the applicable portions of this standard. Accessible building entrances shall comply with Section 402.2.1. Accessible routes within a site shall comply with Section 402.2.2. All other accessible routes shall consist of one or more of the following components: walking surfaces with a slope not steeper than 1:20, doors and doorways, ramps, curb ramps excluding the flared sides, elevators, and platform lifts.

402.2.1 Accessible building entrance components. Accessible building entrances shall provide an exterior accessible route consisting of one or more of the following components: walking surfaces with a slope of not steeper than 1:20; doors and doorways; curb ramps excluding the flared sides; elevators; and platform lifts.

Exceptions:

1. Buildings not normally occupied shall be permitted to provide an accessible route by means of a ramp.
2. In addition to the components listed in Section 402.2.2, a ramp shall be considered as a component of an exterior accessible route in Group R-2, R-3, and R-4 occupancies where a slope not steeper than 1:20 is not feasible.

402.2.2 Components within a site. Buildings, facilities, elements, and spaces that are required to be accessible and are on the same site shall be connected by an accessible route consisting of one or more of the following components: walking surfaces with a slope not steeper than 1:20; doors and doorways; curb ramps excluding the flared sides; elevators; and platform lifts.

Exception: Buildings, facilities, elements, and spaces not normally occupied shall be permitted to provide an accessible route by means of a ramp.

402.3 Revolving doors, revolving gates, and turnstiles. Revolving doors, revolving gates, and turnstiles shall not be part of an accessible route.

SECTION 403
WALKING SURFACES

403.1 General. Walking surfaces that are a part of an accessible route shall comply with Section 403.

403.2 Floor surface. Floor surfaces shall comply with Section 302.

403.3 Slope. The running slope of walking surfaces shall not be steeper than 1:20. The cross slope of a walking surface shall not be steeper than 1:48.

403.4 Changes in level. Changes in level shall comply with Section 303.

403.5 Clear width. The clear width of an accessible route shall comply with Section 403.5.1, 403.5.2, 403.5.3, or 403.5.4, as applicable.

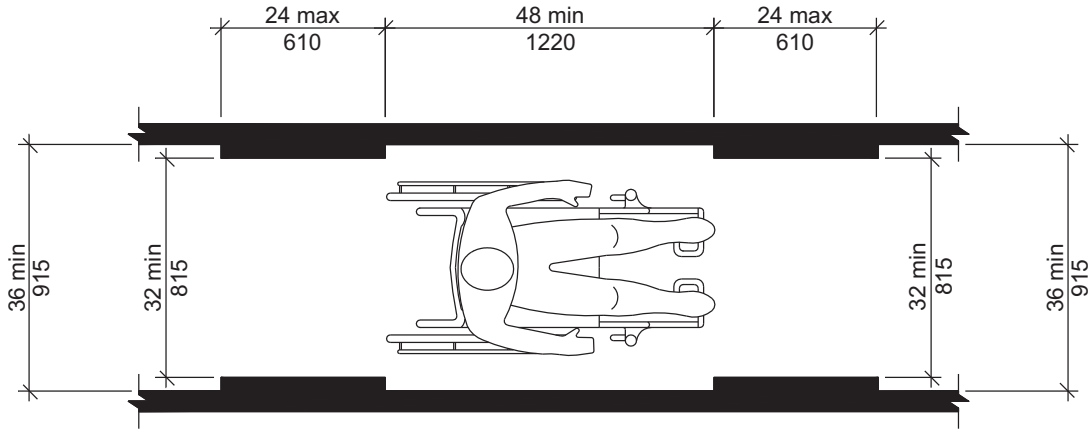

FIGURE 403.5
CLEAR WIDTH OF AN ACCESSIBLE ROUTE

INTERNATIONAL CODE COUNCIL®
Copyright © 2014 ICC. ALL RIGHTS RESERVED. Accessed by William Munson on Jan 4, 2017 9:33:41 PM pursuant to License Agreement with ICC. No further reproduction or distribution authorized. ANY UNAUTHORIZED REPRODUCTION OR DISTRIBUTION IS A VIOLATION OF THE FEDERAL COPYRIGHT ACT AND THE LICENSE AGREEMENT, AND SUBJECT TO CIVIL AND CRIMINAL PENALTIES THEREUNDER.

403.5.1 General. The clear width of an accessible route shall be 36 inches (915 mm) minimum.

Exception: The clear width shall be permitted to be reduced to 32 inches (815 mm) minimum for a length of 24 inches (610 mm) maximum provided the reduced width segments are separated by segments that are 48 inches (1220 mm) minimum in length and 36 inches (915 mm) minimum in width.

403.5.2 Clear width at turn. Where an accessible route makes a 180-degree turn around an object that is less than 48 inches (1220 mm) in width, clear widths shall be 42 inches (1065 mm) minimum approaching the turn, 48 inches (1220 mm) minimum during the turn and 42 inches (1065 mm) minimum leaving the turn.

Exception: Section 403.5.2 shall not apply where the clear width at the turn is 60 inches (1525 mm) minimum.

403.5.3 Passing space. An accessible route with a clear width less than 60 inches (1525 mm) shall provide passing spaces at intervals of 200 feet (61 m) maximum. Passing spaces shall be either a 60-inch (1525 mm) minimum by 60-inch (1525 mm) minimum space, or an intersection of two walking surfaces that provide a T-shaped turning space complying with Section 304.3.2, provided the base and arms of the T-shaped space extend 48 inches (1220 mm) minimum beyond the intersection.

403.5.4 Exterior walking surfaces. Exterior walking surfaces with a slope not steeper than 1:20 that are part of an accessible route shall be 48 inches (1220 mm) minimum in width.

403.6 Handrails. Where handrails are required at the side of a corridor they shall comply with Sections 505.4 through 505.9.

SECTION 404
DOORS AND DOORWAYS

404.1 General. Doors and doorways that are part of an accessible route shall comply with Section 404.

404.2 Manual doors. Manual doors and doorways, and manual gates, including ticket gates, shall comply with Section 404.2.

Exception: Doors, doorways, and gates designed to be operated only by security personnel shall not be required to comply with Sections 404.2.6, 404.2.7, and 404.2.8.

404.2.1 Double-leaf doors and gates. At least one of the active leaves of doorways with two leaves shall comply with Sections 404.2.2 and 404.2.3.

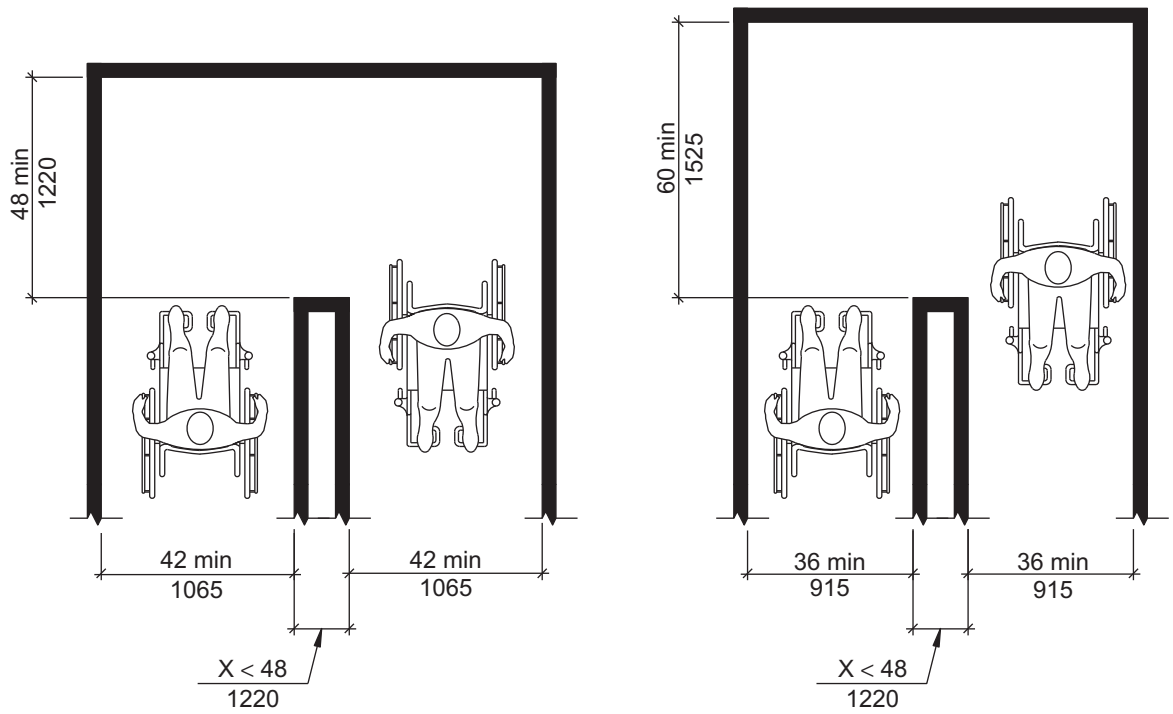

(a)
180 Degree Turn

(b)
180 Degree Turn
(Exception)

FIGURE 403.5.2
CLEAR WIDTH AT 180 TURN

INTERNATIONAL CODE COUNCIL®
Copyright © 2014 ICC. ALL RIGHTS RESERVED. Accessed by William Munson on Jan 4, 2017 9:33:41 PM pursuant to License Agreement with ICC. No further reproduction or distribution authorized. ANY UNAUTHORIZED REPRODUCTION OR DISTRIBUTION IS A VIOLATION OF THE FEDERAL COPYRIGHT ACT AND THE LICENSE AGREEMENT, AND SUBJECT TO CIVIL AND CRIMINAL PENALTIES THEREUNDER.

404.2.2 Clear width. Doorways shall have a clear opening width of 32 inches (815 mm) minimum. Clear opening width of doorways with swinging doors shall be measured between the face of door and stop, with the door open 90 degrees. Openings more than 24 inches (610 mm) in depth at doors and doorways without doors shall provide a clear opening width of 36 inches (915 mm) minimum. There shall be no projections into the clear opening width lower than 34 inches (865 mm) above the floor. Projections into the clear opening width between 34 inches (865 mm) and 80 inches (2030 mm) above the floor shall not exceed 4 inches (100 mm).

Exceptions:

1. Door closers and door stops shall be permitted to be 78 inches (1980 mm) minimum above the floor.
2. In alterations, a projection of $^{5}/_{8}$ inch (16 mm) maximum into the required clear opening width shall be permitted for the latch side stop.

404.2.3 Maneuvering clearances. Minimum maneuvering clearances at doors shall comply with Section 404.2.3 and shall include the full clear opening width of the doorway. Required door maneuvering clearances shall not include knee and toe clearance.

404.2.3.1 Floor surface. Floor surface within the maneuvering clearances shall have a slope not steeper than 1:48 and shall comply with Section 302.

404.2.3.2 Swinging doors. Swinging doors shall have maneuvering clearances complying with Table 404.2.3.2.

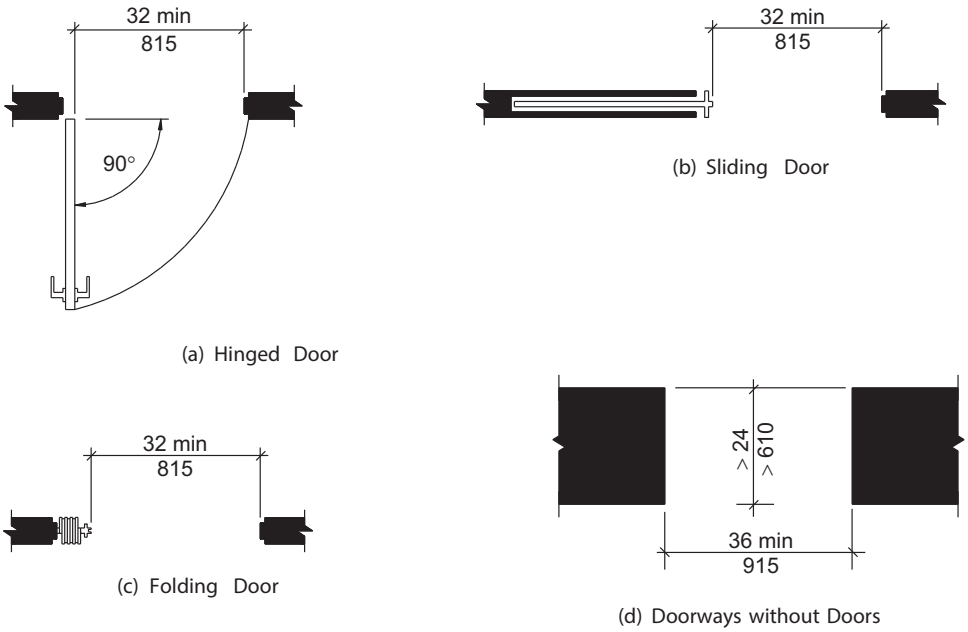

FIGURE 404.2.2
CLEAR WIDTH OF DOORWAYS

TABLE 404.2.3.2
MANEUVERING CLEARANCES AT MANUAL SWINGING DOORS

TYPE OF USE		MANEUVERING CLEARANCES AT MANUAL SWINGING DOORS	
Approach Direction	Door Side	Perpendicular to Doorway	Parallel to Doorway (beyond latch unless noted)
From front	Pull	60 inches (1525 mm)	18 inches (455 mm)
From front	Push	48 inches (1220 mm)	0 inches (0 mm)[3]
From hinge side	Pull	60 inches (1525 mm)	36 inches (915 mm)
From hinge side	Pull	54 inches (1370 mm)	42 inches (1065 mm)
From hinge side	Push	42 inches (1065 mm)[1]	22 inches (560 mm)[3 & 4]
From latch side	Pull	48 inches (1220 mm)[2]	24 inches (610 mm)
From latch side	Push	42 inches (1065 mm)[2]	24 inches (610 mm)

1. Add 6 inches (150 mm) if closer and latch provided.
2. Add 6 inches (150 mm) if closer provided.
3. Add 12 inches (305 mm) beyond latch if closer and latch provided.
4. Beyond hinge side.

INTERNATIONAL CODE COUNCIL®
Copyright © 2014 ICC. ALL RIGHTS RESERVED. Accessed by William Munson on Jan 4, 2017 9:33:41 PM pursuant to License Agreement with ICC. No further reproduction or distribution authorized. ANY UNAUTHORIZED REPRODUCTION OR DISTRIBUTION IS A VIOLATION OF THE FEDERAL COPYRIGHT ACT AND THE LICENSE AGREEMENT, AND SUBJECT TO CIVIL AND CRIMINAL PENALTIES THEREUNDER.

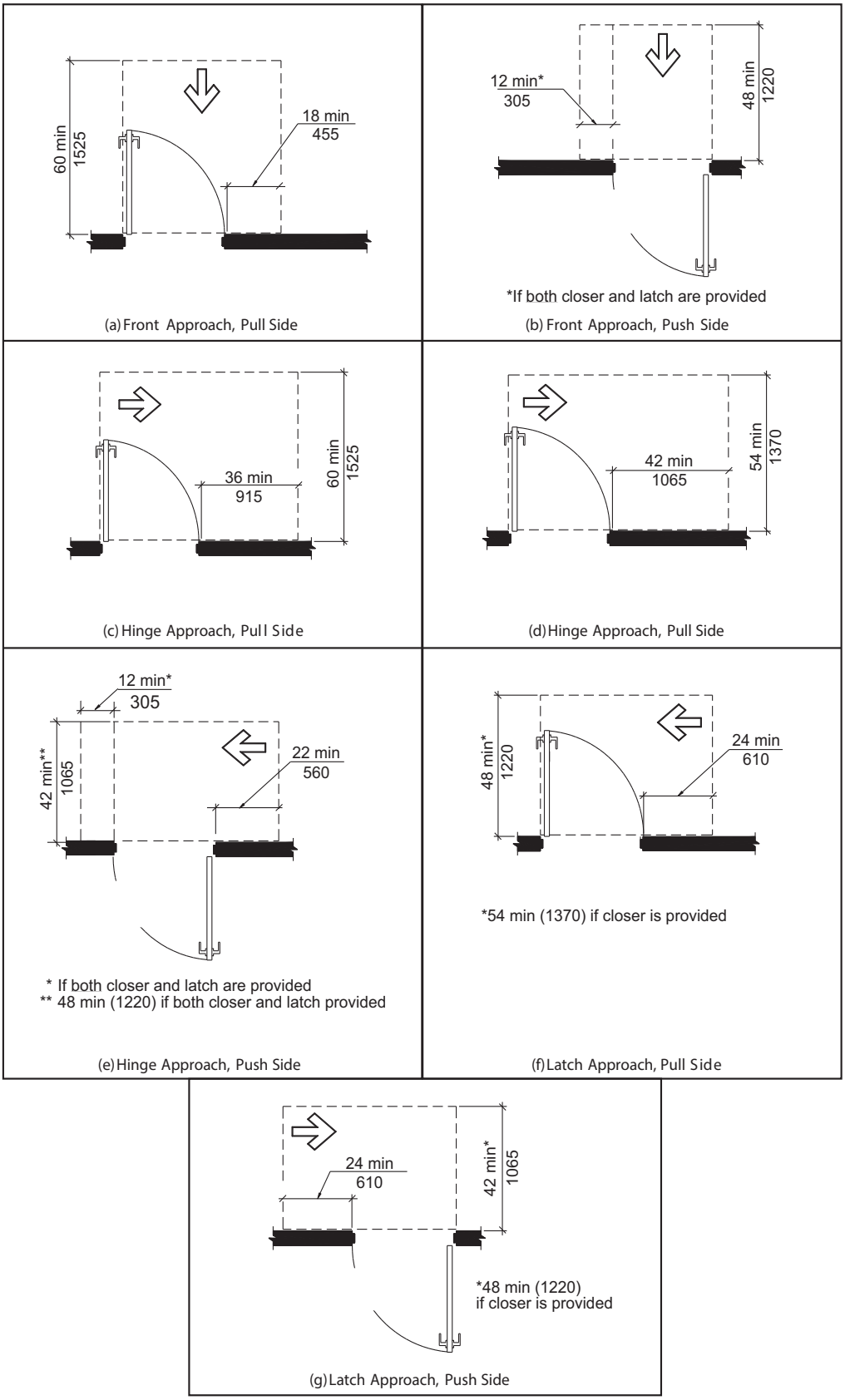

FIGURE 404.2.3.2
MANEUVERING CLEARANCE AT MANUAL SWINGING DOORS

INTERNATIONAL CODE COUNCIL®
Copyright © 2014 ICC. ALL RIGHTS RESERVED. Accessed by William Munson on Jan 4, 2017 9:33:41 PM pursuant to License Agreement with ICC. No further reproduction or distribution authorized. ANY UNAUTHORIZED REPRODUCTION OR DISTRIBUTION IS A VIOLATION OF THE FEDERAL COPYRIGHT ACT AND THE LICENSE AGREEMENT, AND SUBJECT TO CIVIL AND CRIMINAL PENALTIES THEREUNDER.

404.2.3.3 Sliding and folding doors. Sliding doors and folding doors shall have maneuvering clearances complying with Table 404.2.3.3.

TABLE 404.2.3.3
MANEUVERING CLEARANCES AT SLIDING AND FOLDING DOORS

APPROACH DIRECTION	MINIMUM MANEUVERING CLEARANCES	
	Perpendicular to Doorway	Parallel to Doorway (beyond stop or latch side unless noted)
From front	48 inches (1220 mm)	0 inches (0 mm)
From nonlatch side	42 inches (1065 mm)	22 inches (560 mm)[1]
From latch side	42 inches (1065 mm)	24 inches (610 mm)

1. Beyond pocket or hinge side.

404.2.3.4 Doorways without doors. Doorways without doors that are less than 36 inches (915 mm) in width shall have maneuvering clearances complying with Table 404.2.3.4

TABLE 404.2.3.4
MANEUVERING CLEARANCES FOR DOORWAYS WITHOUT DOORS

APPROACH DIRECTION	MINIMUM MANEUVERING CLEARANCES (Perpendicular to Doorway)
From front	48 inches (1220 mm)
From side	(1065 mm)

404.2.3.5 Recessed doors. Where any obstruction within 18 inches (455 mm) of the latch side of a doorway projects more than 8 inches (205 mm) beyond the face of the door, measured perpendicular to the face of the door, maneuvering clearances for a forward approach shall be provided.

404.2.4 Thresholds. If provided, thresholds at doorways shall be $^1/_2$ inch (13 mm) maximum in height. Raised thresholds and changes in level at doorways shall comply with Sections 302 and 303.

Exception: An existing or altered threshold shall be permitted to be $^3/_4$ inch (19 mm) maximum in height provided that the threshold has a beveled edge on each side with a maximum slope of 1:2 for the height exceeding $^1/_4$ inch (6.4 mm).

404.2.5 Two doors in series. Distance between two hinged or pivoted doors in series shall be 48 inches (1220 mm) minimum plus the width of any door swinging into the space. The space between the doors shall provide a turning space complying with Section 304.

404.2.6 Door hardware. Handles, pulls, latches, locks, and other operable parts on accessible doors shall have a shape that is easy to grasp with one hand and does not require tight grasping, pinching, or twisting of the wrist to operate. Operable parts of such hardware shall be 34 inches (865 mm) minimum and 48 inches (1220 mm) maximum above the floor. Where sliding doors are in the fully open position, operating hardware shall be exposed and usable from both sides.

Exception: Locks used only for security purposes and not used for normal operation shall not be required to comply with Section 404.2.6.

404.2.7 Closing speed.

404.2.7.1 Door closers. Door closers shall be adjusted so that from an open position of 90 degrees, the time required to move the door to an open position of 12 degrees shall be 5 seconds minimum.

404.2.7.2 Spring hinges. Door spring hinges shall be adjusted so that from an open position of 70 degrees, the door shall move to the closed position in 1.5 seconds minimum.

404.2.8 Door-opening force. Fire doors shall have the minimum opening force allowable by the appropriate administrative authority. The force for pushing or pulling open doors other than fire doors shall be as follows:

1. Interior hinged door: 5.0 pounds (22.2 N) maximum.
2. Sliding or folding door: 5.0 pounds (22.2 N) maximum.

These forces do not apply to the force required to retract latch bolts or disengage other devices that hold the door in a closed position.

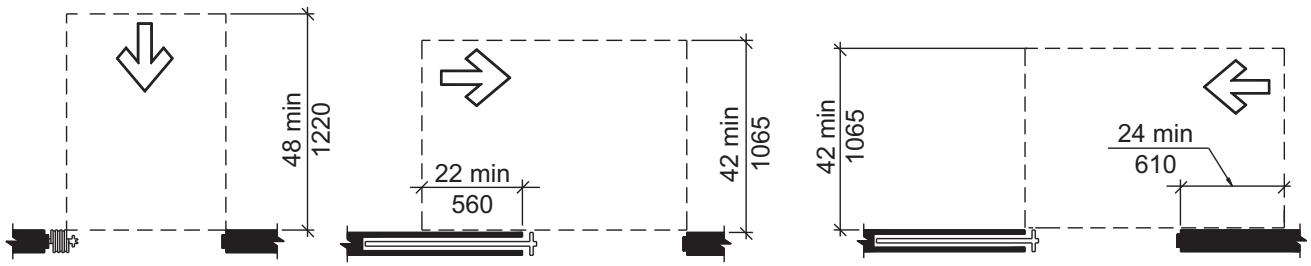

FIGURE 404.2.3.3
MANEUVERING CLEARANCE AT SLIDING AND FOLDING DOORS

INTERNATIONAL CODE COUNCIL®
Copyright © 2014 ICC. ALL RIGHTS RESERVED. Accessed by William Munson on Jan 4, 2017 9:33:41 PM pursuant to License Agreement with ICC. No further reproduction or distribution authorized. ANY UNAUTHORIZED REPRODUCTION OR DISTRIBUTION IS A VIOLATION OF THE FEDERAL COPYRIGHT ACT AND THE LICENSE AGREEMENT, AND SUBJECT TO CIVIL AND CRIMINAL PENALTIES THEREUNDER.

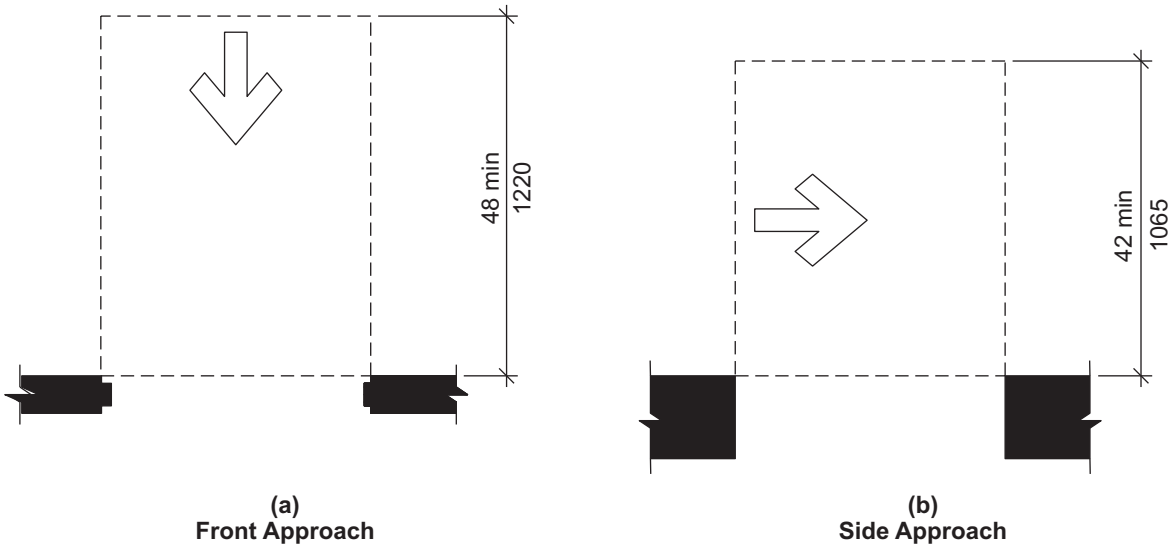

FIGURE 404.2.3.4
MANEUVERING CLEARANCE AT DOORWAYS WITHOUT DOORS

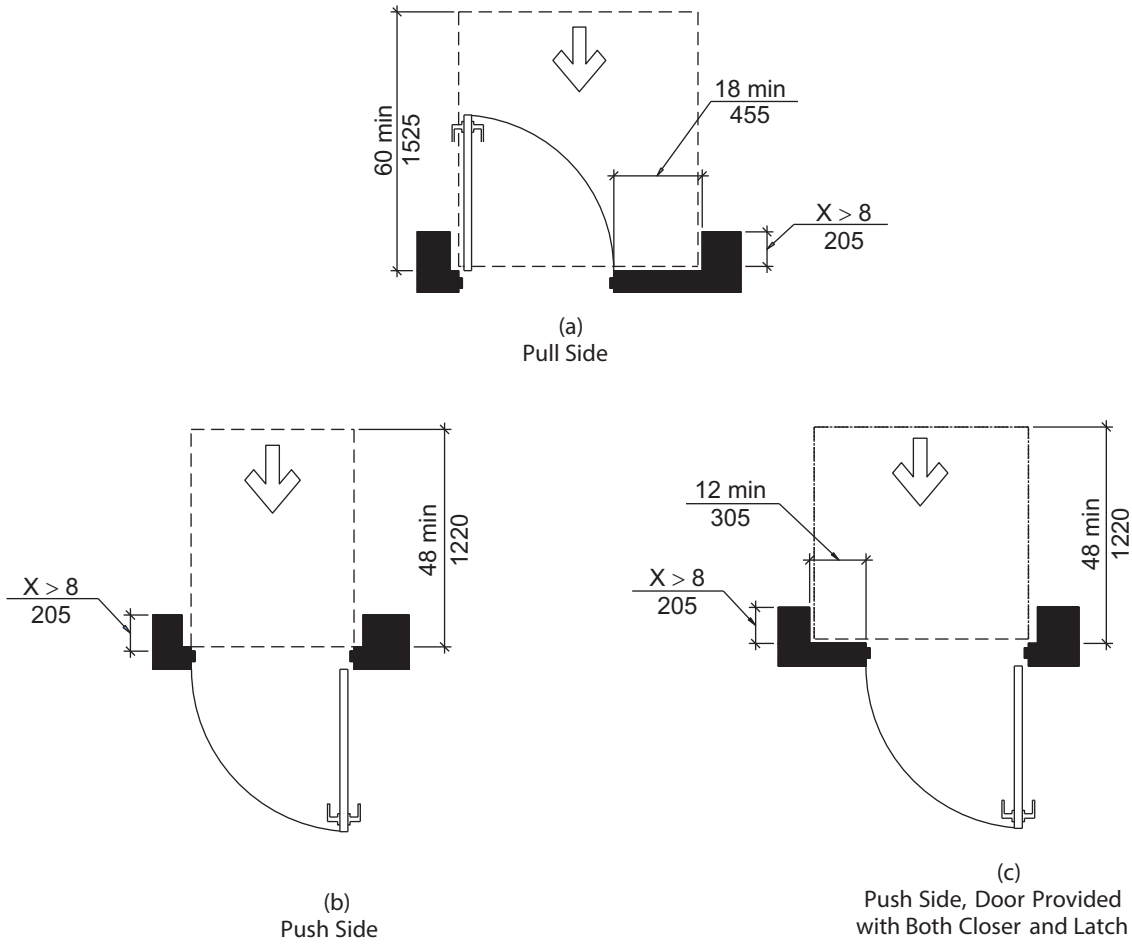

FIGURE 404.2.3.5
MANEUVERING CLEARANCE AT RECESSED DOORS

INTERNATIONAL CODE COUNCIL®
Copyright © 2014 ICC. ALL RIGHTS RESERVED. Accessed by William Munson on Jan 4, 2017 9:33:41 PM pursuant to License Agreement with ICC. No further reproduction or distribution authorized. ANY UNAUTHORIZED REPRODUCTION OR DISTRIBUTION IS A VIOLATION OF THE FEDERAL COPYRIGHT ACT AND THE LICENSE AGREEMENT, AND SUBJECT TO CIVIL AND CRIMINAL PENALTIES THEREUNDER.

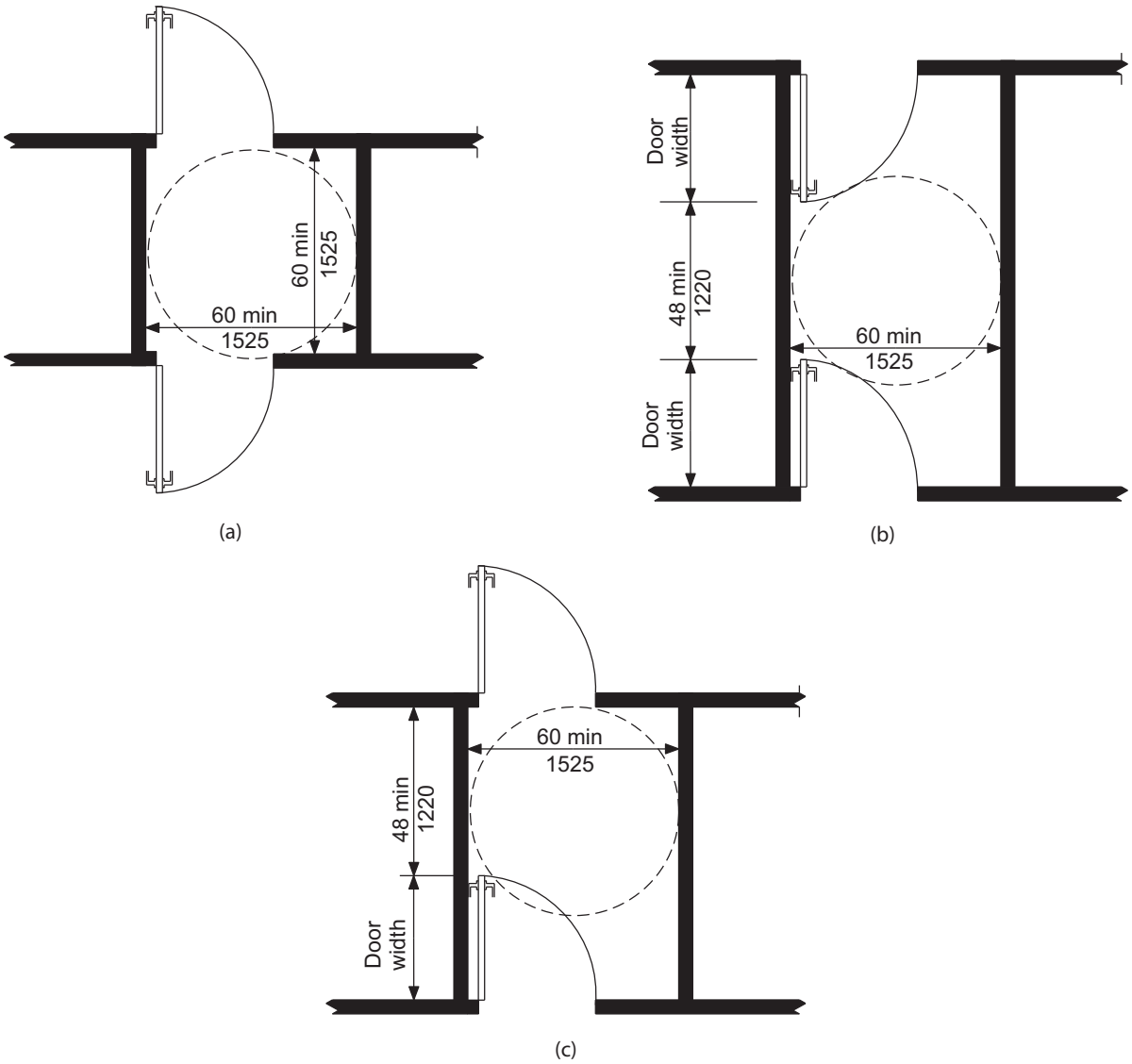

FIGURE 404.2.5
TWO DOORS IN A SERIES

404.2.9 Door surface. Door surfaces within 10 inches (255 mm) of the floor, measured vertically, shall be a smooth surface on the push side extending the full width of the door. Parts creating horizontal or vertical joints in such surface shall be within $^{1}/_{16}$ inch (1.6 mm) of the same plane as the other. Cavities created by added kick plates shall be capped.

Exceptions:

1. Sliding doors shall not be required to comply with Section 404.2.9.
2. Tempered glass doors without stiles and having a bottom rail or shoe with the top leading edge tapered at no less than 60 degrees from the horizontal shall not be required to comply with the 10-inch (255 mm) bottom rail height requirement.
3. Doors that do not extend to within 10 inches (255 mm) of the floor shall not be required to comply with Section 404.2.9.

404.2.10 Vision lites. Doors and sidelites adjacent to doors containing one or more glazing panels that permit viewing through the panels shall have the bottom of at least one panel on either the door or an adjacent sidelite 43 inches (1090 mm) maximum above the floor.

Exception: Vision lites with the lowest part more than 66 inches (1675 mm) above the floor shall not be required to comply with Section 404.2.10.

404.3 Automatic doors. Automatic doors and automatic gates shall comply with Section 404.3. Full powered automatic

INTERNATIONAL CODE COUNCIL®
Copyright © 2014 ICC. ALL RIGHTS RESERVED. Accessed by William Munson on Jan 4, 2017 9:33:41 PM pursuant to License Agreement with ICC. No further reproduction or distribution authorized. ANY UNAUTHORIZED REPRODUCTION OR DISTRIBUTION IS A VIOLATION OF THE FEDERAL COPYRIGHT ACT AND THE LICENSE AGREEMENT, AND SUBJECT TO CIVIL AND CRIMINAL PENALTIES THEREUNDER.

doors shall comply with ANSI/BHMA A156.10 listed in Section 105.2.4. Power-assist and low-energy doors shall comply with ANSI/BHMA A156.19 listed in Section 105.2.3.

Exception: Doors, doorways, and gates designed to be operated only by security personnel shall not be required to comply with Sections 404.3.2, 404.3.4, and 404.3.5.

404.3.1 Clear width. Doorways shall have a clear opening width of 32 inches (815 mm) in power-on and power-off mode. The minimum clear opening width for automatic door systems shall be based on the clear opening width provided with all leafs in the open position.

404.3.2 Maneuvering clearances. Maneuvering clearances at power-assisted doors shall comply with Section 404.2.3. Clearances at automatic doors and gates without standby power and serving an accessible means of egress shall comply with Section 404.2.3.

Exception: Automatic doors and gates which remain open in the power-off condition.

404.3.3 Thresholds. Thresholds and changes in level at doorways shall comply with Section 404.2.4.

404.3.4 Two Doors in series. Doors in series shall comply with Section 404.2.5.

404.3.5 Control switches. Manually operated control switches shall comply with Section 404.3.5.

404.3.5.1 Interior location. Manually operated control switches at interior locations shall comply with Section 309. The clear floor space adjacent to the control switch shall be located beyond the arc of the door swing.

404.3.5.2 Exterior location. Manually operated control switches at exterior locations shall comply with Sections 309.2 and 309.4. The clear floor space adjacent to the control switch shall be located beyond the arc of the door swing, be centered on the control switch, and be positioned for a parallel approach to the control switch. Control switches shall have a 3-inch (75 mm) minimum dimension measured at at least one point, such as diagonal, diameter or one side. Control switches shall be mounted 30 inches (760 mm) minimum, measured to the bottom of the control switch, and 36 inches (915 mm) maximum, measured to the top of the control switch, above the finished floor.

SECTION 405
RAMPS

405.1 General. Ramps along accessible routes shall comply with Section 405.

Exception: In assembly areas, aisle ramps adjacent to seating and not serving elements required to be on an accessible route shall not be required to comply with Section 405.

405.2 Slope. Ramp runs shall have a running slope greater than 1:20 and not steeper than 1:12.

Exception: In existing buildings or facilities, ramps shall be permitted to have slopes steeper than 1:12 complying with Table 405.2 where such slopes are necessary due to space limitations.

TABLE 405.2
ALLOWABLE RAMP DIMENSIONS FOR CONSTRUCTION IN EXISTING SITES, BUILDINGS AND FACILITIES

SLOPE[1]	MAXIMUM RISE
Steeper than 1:10 but not steeper than 1:8	3 inches (75 mm)
Steeper than 1:12 but not steeper than 1:10	6 inches (150 mm)

1. A slope steeper than 1:8 shall not be permitted.

405.3 Cross slope. Cross slope of ramp runs shall not be steeper than 1:48.

405.4 Floor surfaces. Floor surfaces of ramp runs shall comply with Section 302.

405.5 Clear width. The clear width of a ramp run shall be 36 inches (915 mm) minimum. Handrails and handrail supports that are provided on the ramp run shall not project into the required clear width of the ramp run.

405.6 Rise. The rise for any ramp run shall be 30 inches (760 mm) maximum.

405.7 Landings. Ramps shall have landings at the bottom and top of each ramp run. Landings shall comply with Section 405.7.

405.7.1 Slope. Landings shall have a slope not steeper than 1:48 and shall comply with Section 302.

405.7.2 Width. Clear width of landings shall be at least as wide as the widest ramp run leading to the landing.

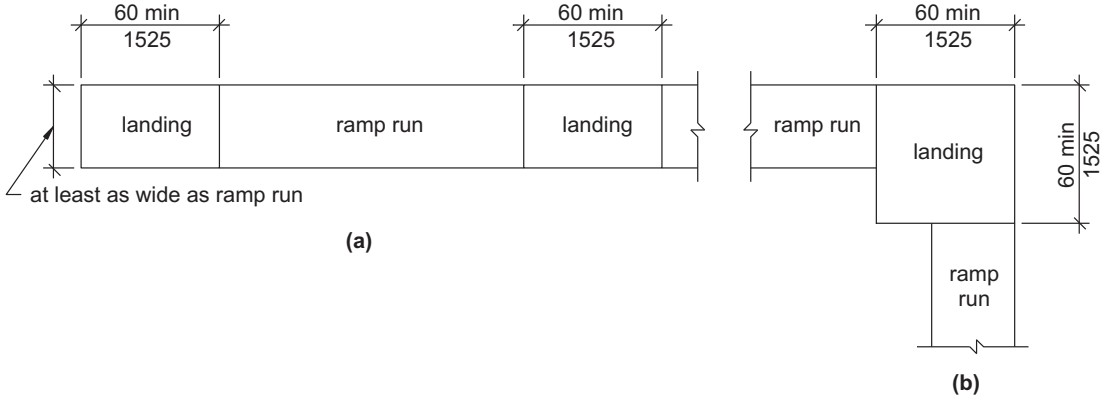

FIGURE 405.7
RAMP LANDINGS

INTERNATIONAL CODE COUNCIL®
Copyright © 2014 ICC. ALL RIGHTS RESERVED. Accessed by William Munson on Jan 4, 2017 9:33:41 PM pursuant to License Agreement with ICC. No further reproduction or distribution authorized. ANY UNAUTHORIZED REPRODUCTION OR DISTRIBUTION IS A VIOLATION OF THE FEDERAL COPYRIGHT ACT AND THE LICENSE AGREEMENT, AND SUBJECT TO CIVIL AND CRIMINAL PENALTIES THEREUNDER.

405.7.3 Length. Landings shall have a clear length of 60 inches (1525 mm) minimum.

405.7.4 Change in direction. Ramps that change direction at ramp landings shall be sized to provide a turning space complying with Section 304.3.

405.7.5 Doorways. Where doorways are adjacent to a ramp landing, maneuvering clearances required by Sections 404.2.3 and 404.3.2 shall be permitted to overlap the landing area. Where a door that is subject to locking is located adjacent to a ramp landing, the landing shall be sized to provide a turning space complying with Section 304.3.

405.8 Handrails. Ramp runs with a rise greater than 6 inches (150 mm) shall have handrails complying with Section 505.

405.9 Edge protection. Edge protection complying with Section 405.9.1 or 405.9.2 shall be provided on each side of ramp runs and at each side of ramp landings.

Exceptions:

1. Edge protection shall not be required on ramps not required to have handrails and that have flared sides complying with Section 406.3.
2. Edge protection shall not be required on the sides of ramp landings serving an adjoining ramp run or stairway.
3. Edge protection shall not be required on the sides of ramp landings having a vertical drop-off of $^1/_2$ inch (13 mm) maximum within 10 inches (255 mm) horizontally of the minimum landing area specified in Section 405.7.
4. Edge protection shall not be required on the sides of ramped aisles where the ramps provide access to the adjacent seats and aisle access ways.

405.9.1 Extended floor surface. The floor surface of the ramp run or ramp landing shall extend 12 inches (305 mm) minimum beyond the inside face of a railing complying with Section 505.

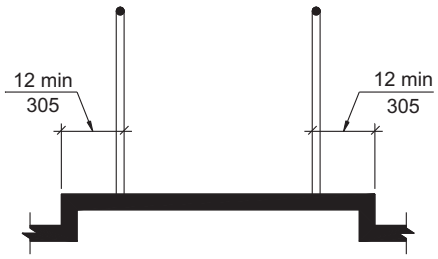

Extended Floor Surface

FIGURE 405.9.1
EXTENDED FLOOR SURFACE

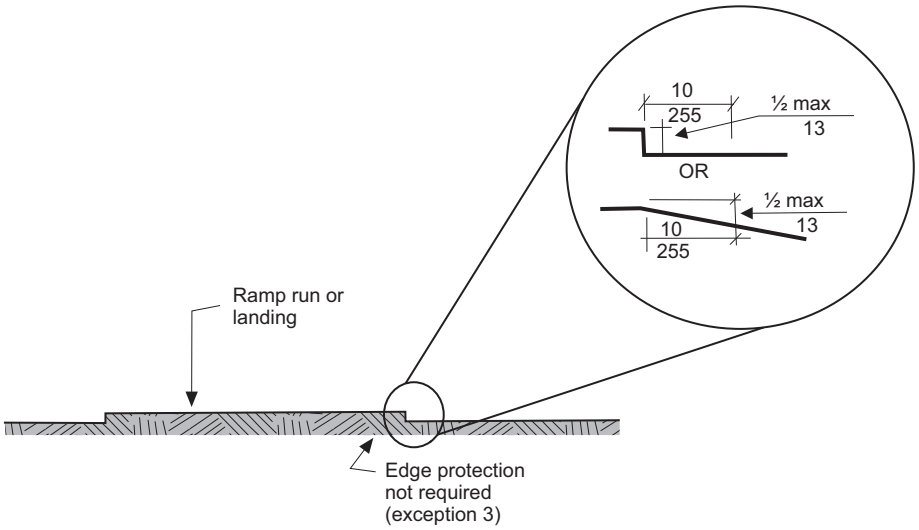

FIGURE 405.9
EDGE PROTECTION—LIMITED DROP OFF

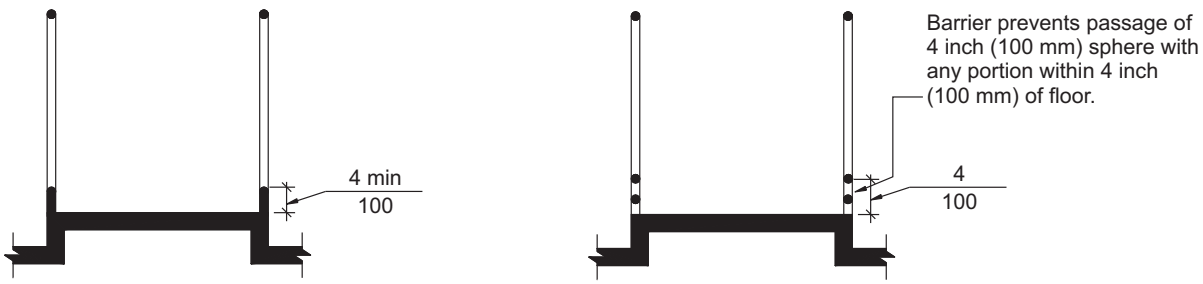

Curb (a) Barrier (b)

FIGURE 405.9.2
RAMP EDGE PROTECTION

INTERNATIONAL CODE COUNCIL®
Copyright © 2014 ICC. ALL RIGHTS RESERVED. Accessed by William Munson on Jan 4, 2017 9:33:41 PM pursuant to License Agreement with ICC. No further reproduction or distribution authorized. ANY UNAUTHORIZED REPRODUCTION OR DISTRIBUTION IS A VIOLATION OF THE FEDERAL COPYRIGHT ACT AND THE LICENSE AGREEMENT, AND SUBJECT TO CIVIL AND CRIMINAL PENALTIES THEREUNDER.

405.9.2 Curb or barrier. A curb complying with Section 405.9.2.1 or a barrier complying with Section 405.9.2.2 shall be provided.

405.9.2.1 Curb. A curb shall be a minimum of 4 inches (100 mm) in height.

405.9.2.2 Barrier. Barriers shall be constructed so that the barrier prevents the passage of a 4-inch (100 mm) diameter sphere where any portion of the sphere is within 4 inches (100 mm) of the floor.

405.10 Wet conditions. Landings subject to wet conditions shall be designed to prevent the accumulation of water.

SECTION 406
CURB RAMPS

406.1 General. Curb ramps on accessible routes shall comply with Sections 406, 405.2, 405.3, and 405.10.

406.2 Counter slope. Counter slopes of adjoining gutters and road surfaces immediately adjacent to the curb ramp shall not be steeper than 1:20. The adjacent surfaces at transitions at curb ramps to walks, gutters and streets shall be at the same level.

406.3 Sides of curb ramps. Where provided, curb ramp flares shall comply with Section 406.3.

406.3.1 Slope. Flares shall not be steeper than 1:10.

406.3.2 Marking. If curbs adjacent to the ramp flares are painted, the painted surface shall extend along the flared portion of the curb.

406.4 Width. Curb ramps shall be 36 inches (915 mm) minimum in width, exclusive of flared sides.

406.5 Floor surface. Floor surfaces of curb ramps shall comply with Section 302.

406.6 Location. Curb ramps and the flared sides of curb ramps shall be located so they do not project into vehicular traffic lanes, parking spaces, or parking access aisles. Curb ramps at marked crossings shall be wholly contained within the markings, excluding any flared sides.

406.7 Landings. Landings shall be provided at the tops of curb ramps. The clear length of the landing shall be 36 inches (915 mm) minimum. The clear width of the landing shall be at least as wide as the curb ramp, excluding flared sides, leading to the landing.

Exception: In alterations, where there is no landing at the top of curb ramps, curb ramp flares shall be provided and shall not be steeper than 1:12.

406.8 Obstructions. Curb ramps shall be located or protected to prevent their obstruction by parked vehicles.

406.9 Handrails. Handrails shall not be required on curb ramps.

406.10 Diagonal curb ramps. Diagonal or corner-type curb ramps with returned curbs or other well-defined edges shall have the edges parallel to the direction of pedestrian flow. The bottoms of diagonal curb ramps shall have 48 inches (1220 mm) minimum clear space outside active traffic lanes of the roadway. Diagonal curb ramps provided at marked crossings shall provide the 48 inches (1220 mm) minimum clear space within the markings. Diagonal curb ramps with flared sides shall have a segment of curb 24 inches (610 mm) minimum in length on each side of the curb ramp and within the marked crossing.

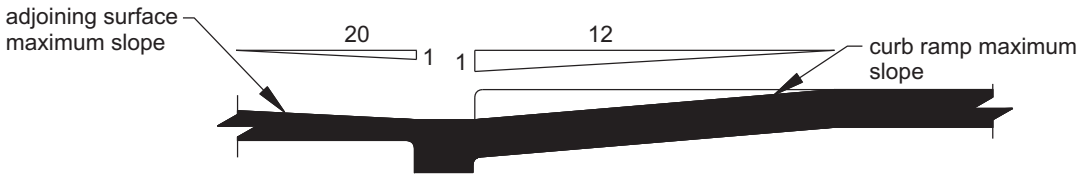

FIGURE 406.2
COUNTER SLOPE OF SURFACES ADJACENT TO CURB RAMPS

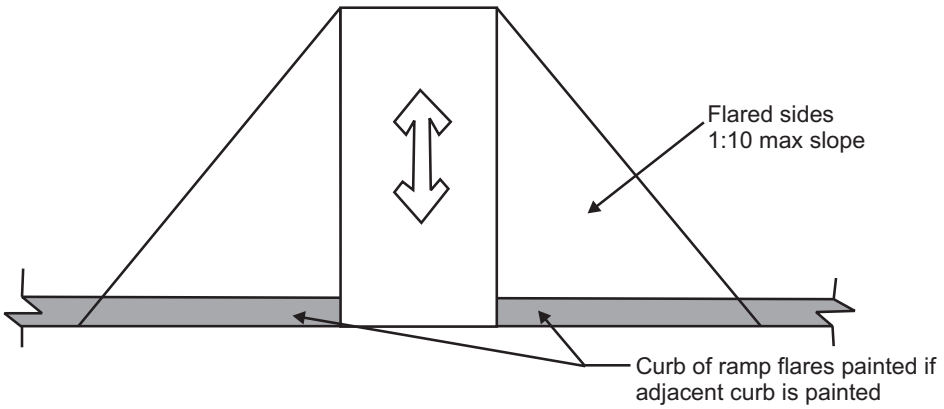

FIGURE 406.3
SIDES OF CURB RAMPS

INTERNATIONAL CODE COUNCIL®
Copyright © 2014 ICC. ALL RIGHTS RESERVED. Accessed by William Munson on Jan 4, 2017 9:33:41 PM pursuant to License Agreement with ICC. No further reproduction or distribution authorized. ANY UNAUTHORIZED REPRODUCTION OR DISTRIBUTION IS A VIOLATION OF THE FEDERAL COPYRIGHT ACT AND THE LICENSE AGREEMENT, AND SUBJECT TO CIVIL AND CRIMINAL PENALTIES THEREUNDER.

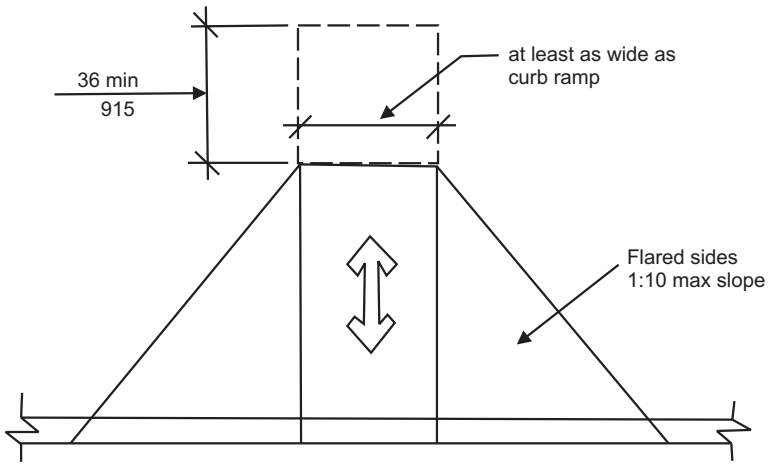

FIGURE 406.7
LANDINGS

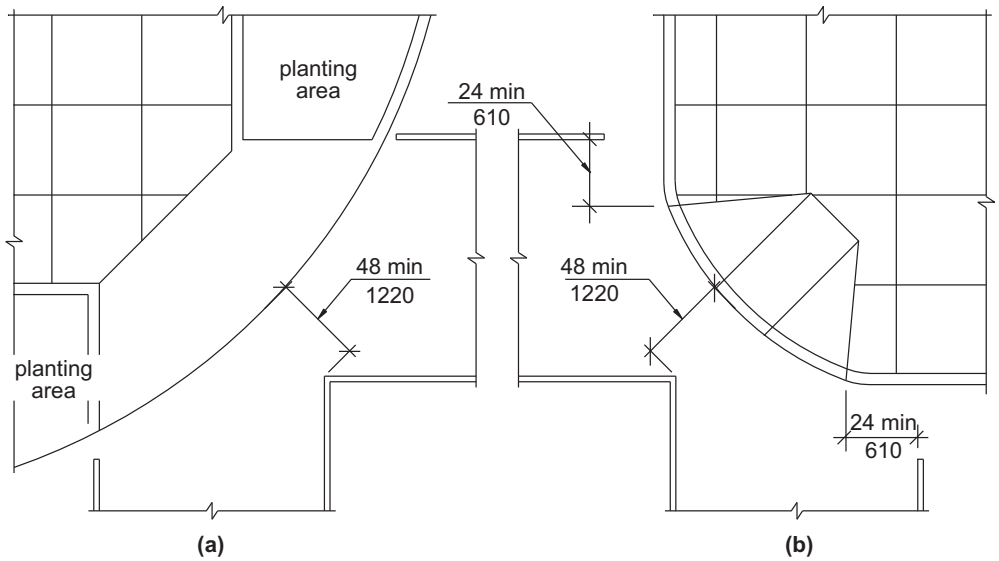

FIGURE 406.10
DIAGONAL CURB RAMPS

406.11 Islands. Raised islands in crossings shall be a cut-through level with the street or have curb ramps at both sides. Each curb ramp shall have a level area 48 inches (1220 mm) minimum in length and 36 inches (915 mm) minimum in width at the top of the curb ramp in the part of the island intersected by the crossings. Each 48-inch (1220 mm) by 36-inch (915 mm) area shall be oriented so the 48-inch (1220 mm) length is in the direction of the running slope of the curb ramp it serves. The 48-inch (1220 mm) by 36-inch (915 mm) areas and the accessible route shall be permitted to overlap.

406.12 Detectable warnings at raised marked crossings. Marked crossings that are raised to the same level as the adjoining sidewalk shall be preceded by a detectable warning 24 inches (610 mm) in depth complying with Section 705. The detectable warning shall extend the full width of the marked crossing.

406.13 Detectable warnings at curb ramps. Where detectable warnings are provided on curb ramps, they shall comply with Sections 406.13 and 705.

406.13.1 Area covered. Detectable warnings shall be 24 inches (610 mm) minimum in depth in the direction of travel. The detectable warning shall extend the full width of the curb ramp or flush surface.

406.13.2 location. The detectable warning shall be located so the edge nearest the curb line is 6 inches (150 mm) minimum and 8 inches (205 mm) maximum from the curb line.

406.14 Detectable warnings at islands or cut-through medians. Where detectable warnings are provided on curb ramps or at raised marked crossings leading to islands or cut-through medians, the island or cut-through median shall be

INTERNATIONAL CODE COUNCIL®
Copyright © 2014 ICC. ALL RIGHTS RESERVED. Accessed by William Munson on Jan 4, 2017 9:33:41 PM pursuant to License Agreement with ICC. No further reproduction or distribution authorized. ANY UNAUTHORIZED REPRODUCTION OR DISTRIBUTION IS A VIOLATION OF THE FEDERAL COPYRIGHT ACT AND THE LICENSE AGREEMENT, AND SUBJECT TO CIVIL AND CRIMINAL PENALTIES THEREUNDER.

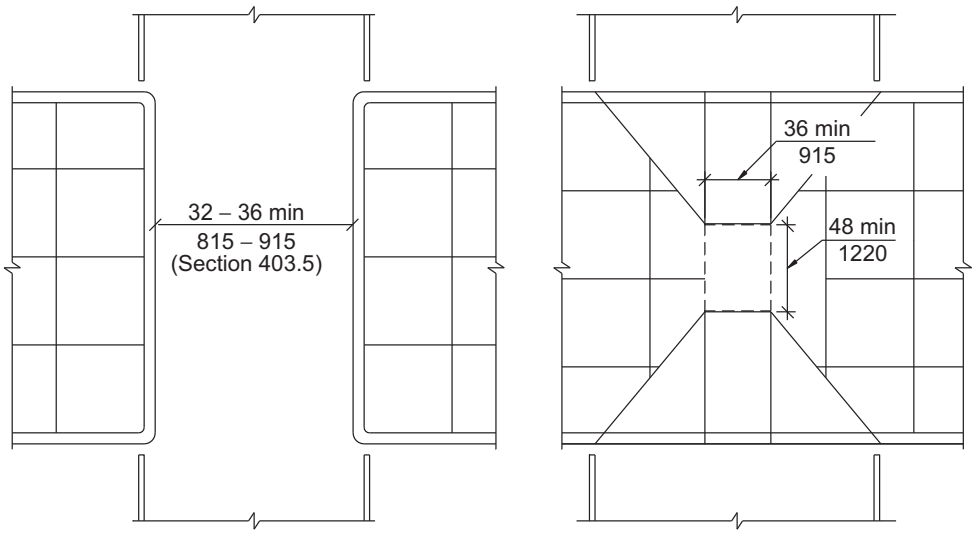

FIGURE 406.11
ISLANDS

provided with detectable warnings complying with Section 705, that are 24 inches (610 mm) in depth, and extend the full width of the pedestrian route or cut-through. Where such island or cut-through median is less than 48 inches (1220 mm) in depth, the entire width and depth of the pedestrian route or cut-through shall have detectable warnings.

SECTION 407
ELEVATORS

407.1 General. Elevators shall comply with Section 407 and Minnesota Rules, Chapter 1307, Minnesota Elevators and Related Devices. Elevators shall be passenger elevators as classified by Minnesota Rules, Chapter 1307, Minnesota Elevators and Related Devices. Elevator operation shall be automatic. Elevators shall not be attendant or key operated and shall provide unassisted entry and exit from the elevator.

Exception: When approved by the administrative authority, attendant or key operation shall be permitted when all occupants have controlled or restricted access to the space served by the elevator.

407.2 Elevator landing requirements. Elevator landings shall comply with Section 407.2.

407.2.1 Call controls. Where elevator call buttons or keypads are provided, they shall comply with Sections 407.2.1 and 309.4. Call buttons shall be raised or flush. Objects beneath hall call buttons shall protrude 1 inch (25 mm) maximum.

Exceptions:

1. Existing elevators shall be permitted to have recessed call buttons.
2. The restriction on objects beneath call buttons shall not apply to existing call buttons.

407.2.1.1 Height. Call buttons and keypads shall be located within one of the reach ranges specified in Section 308, measured to the centerline of the highest operable part.

Exception: Existing call buttons and existing keypads shall be permitted to be located 54 inches (1370 mm) maximum above the floor, measured to the centerline of the highest operable part.

407.2.1.2 Size. Call buttons shall be $^3/_4$ inch (19 mm) minimum in the smallest dimension.

Exception: Existing elevator call buttons shall not be required to comply with Section 407.2.1.2.

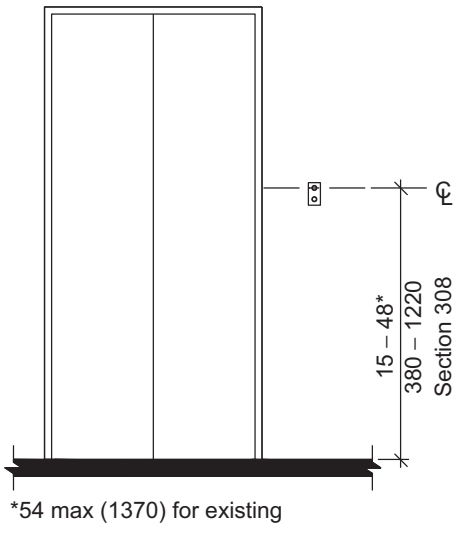

FIGURE 407.2.1.1
HEIGHT OF ELEVATOR CALL BUTTONS

INTERNATIONAL CODE COUNCIL®
Copyright © 2014 ICC. ALL RIGHTS RESERVED. Accessed by William Munson on Jan 4, 2017 9:33:41 PM pursuant to License Agreement with ICC. No further reproduction or distribution authorized. ANY UNAUTHORIZED REPRODUCTION OR DISTRIBUTION IS A VIOLATION OF THE FEDERAL COPYRIGHT ACT AND THE LICENSE AGREEMENT, AND SUBJECT TO CIVIL AND CRIMINAL PENALTIES THEREUNDER.

407.2.1.3 Clear floor space. A clear floor space complying with Section 305 shall be provided at call controls.

407.2.1.4 Location. The call button that designates the up direction shall be located above the call button that designates the down direction.

Exception: Destination-oriented elevators shall not be required to comply with Section 407.2.1.4.

407.2.1.5 Signals. Call buttons shall have visible signals to indicate when each call is registered and when each call is answered. Call buttons shall provide an audible signal or mechanical motion of the button to indicate when each call is registered.

Exceptions:

1. Destination-oriented elevators shall not be required to comply with Section 407.2.1.5, provided a visible signal and audible tones and verbal announcements complying with Section 407.2.1.7 are provided.
2. Existing elevators shall not be required to comply with Section 407.2.1.5.

407.2.1.6 Keypads. Where keypads are provided, keypads shall be in a standard telephone keypad arrangement and shall comply with Section 407.4.7.2.

407.2.1.7 Destination-oriented elevator signals. Destination-oriented elevators shall be provided with a visible signal and audible tones and verbal announcements to indicate which car is responding to a call. The audible tone and verbal announcement shall be activated by pressing a function button. The function button shall be identified by the International Symbol for Accessibility and a raised indication. The International Symbol for Accessibility, complying with Section 703.6.3.1, shall be $^{5}/_{8}$ inch (16 mm) in height and be a visual character complying with Section 703.2. The indication shall be three raised dots, spaced $^{1}/_{4}$ inch (6.4 mm) at base diameter, in the form of an equilateral triangle. The function button shall be located immediately below the keypad arrangement or floor buttons.

407.2.2 Hall signals. Hall signals, including in-car signals, shall comply with Section 407.2.2.

407.2.2.1 Visible and audible signals. A visible and audible signal shall be provided at each hoistway entrance to indicate which car is answering a call and the car's direction of travel. Where in-car signals are provided they shall be visible from the floor area adjacent to the hall call buttons.

Exceptions:

1. Destination-oriented elevators shall not be required to comply with Section 407.2.2.1, provided a visible signal and audible tones and verbal announcements complying with Section 407.2.1.7 are provided.
2. In existing elevators, a signal indicating the direction of car travel shall not be required.

407.2.2.2 Visible signals. Visible signal fixtures shall be centered at 72 inches (1830 mm) minimum above the floor. The visible signal elements shall be $2^{1}/_{2}$ inches (64 mm) minimum between the uppermost and lowest edges of the illuminated shape measured vertically. Signals shall be visible from the floor area adjacent to the hall call button.

Exceptions:

1. Destination-oriented elevators shall be permitted to have signals visible from the floor area adjacent to the hoistway entrance.
2. Existing elevators shall not be required to comply with Section 407.2.2.2.

407.2.2.3 Audible signals. Audible signals shall sound once for the up direction and twice for the down direction, or shall have verbal annunciators that indicate the direction of elevator car travel. Audible signals shall have a frequency of 1500 Hz maximum. Verbal annunciators shall have a frequency of 300 Hz minimum and 3,000 Hz maximum. The audible signal or verbal annunciator shall be 10 dBA minimum above ambient,

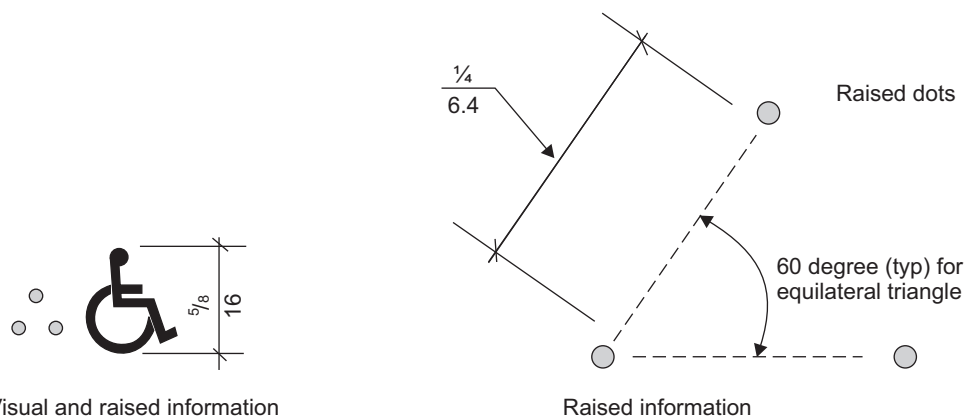

FIGURE 407.2.1.7
DESTINATION-ORIENTED ELEVATOR INDICATION

INTERNATIONAL CODE COUNCIL®
Copyright © 2014 ICC. ALL RIGHTS RESERVED. Accessed by William Munson on Jan 4, 2017 9:33:41 PM pursuant to License Agreement with ICC. No further reproduction or distribution authorized. ANY UNAUTHORIZED REPRODUCTION OR DISTRIBUTION IS A VIOLATION OF THE FEDERAL COPYRIGHT ACT AND THE LICENSE AGREEMENT, AND SUBJECT TO CIVIL AND CRIMINAL PENALTIES THEREUNDER.

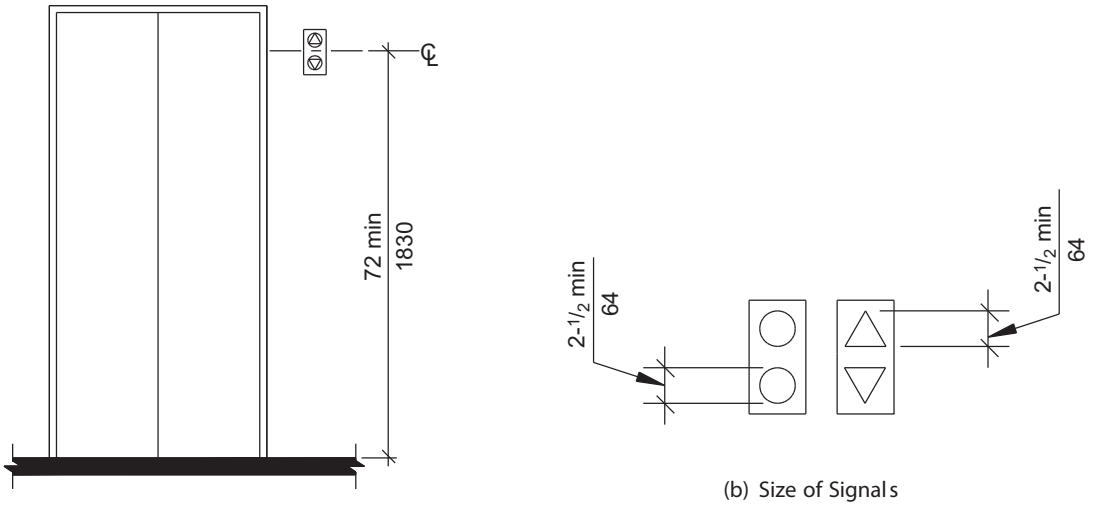

(a) Height of Signals

(b) Size of Signals

FIGURE 407.2.2.2
ELEVATOR VISIBLE SIGNALS

but shall not exceed 80 dBA, measured at the hall call button.

Exceptions:

1. Destination-oriented elevators shall not be required to comply with Section 407.2.2.3, provided the audible tone and verbal announcement is the same as those given at the call button or call button keypad.
2. The requirement for the frequency and range of audible signals shall not apply in existing elevators.

407.2.2.4 Differentiation. Each destination-oriented elevator in a bank of elevators shall have audible and visible means for differentiation.

407.2.3 Hoistway signs. Signs at elevator hoistways shall comply with Section 407.2.3.

407.2.3.1 Floor designation. Floor designations shall be provided in raised characters and braille complying with Sections 703.3 and 703.4. Raised characters shall be 2 inches (51 mm) minimum in height. Floor designations shall be located on both jambs of elevator hoistway entrances. A raised star shall be provided on both jambs at the main entry level.

407.2.3.2 Car identification. Destination-oriented elevators shall provide car identification in raised characters and braille complying with Sections 703.3 and 703.4. Raised characters shall be 2 inches (51 mm) minimum in height. Car identifications shall be located on both jambs of the hoistway immediately below the floor designation.

407.2.4 Destination signs. Where signs indicate that elevators do not serve all landings, signs in raised characters and braille complying with Sections 703.3 and 703.4 shall be provided above the hall call button or keypad.

Exception: Destination oriented elevator systems shall not be required to comply with Section 407.2.4.

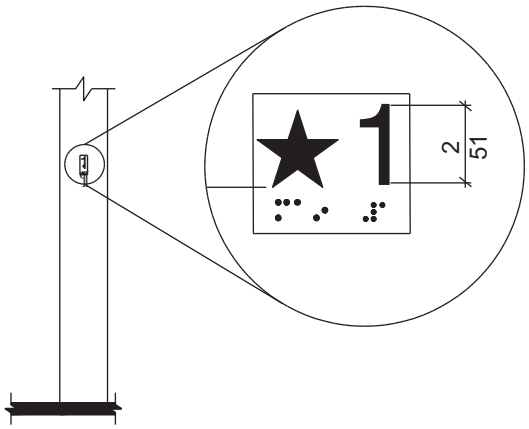

FIGURE 407.2.3.1
FLOOR DESIGNATION

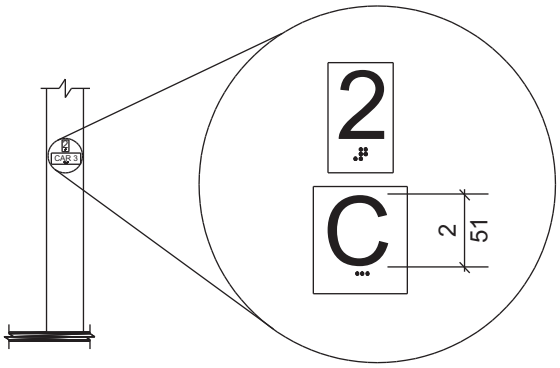

FIGURE 407.2.3.2
DESTINATION-ORIENTED ELEVATOR CAR IDENTIFICATION

INTERNATIONAL CODE COUNCIL®
Copyright © 2014 ICC. ALL RIGHTS RESERVED. Accessed by William Munson on Jan 4, 2017 9:33:41 PM pursuant to License Agreement with ICC. No further reproduction or distribution authorized. ANY UNAUTHORIZED REPRODUCTION OR DISTRIBUTION IS A VIOLATION OF THE FEDERAL COPYRIGHT ACT AND THE LICENSE AGREEMENT, AND SUBJECT TO CIVIL AND CRIMINAL PENALTIES THEREUNDER.

407.3 Elevator door requirements. Hoistway and elevator car doors shall comply with Section 407.3.

407.3.1 Type. Elevator doors shall be horizontal sliding type. Car gates shall be prohibited.

407.3.2 Operation. Elevator hoistway and car doors shall open and close automatically.

Exception: Existing manually operated hoistway swing doors shall be permitted, provided the following criteria are met:

a) The hoistway doors comply with Sections 404.2.2 and 404.2.8;

b) The car door closing is not initiated until the hoistway door is closed.

407.3.3 Reopening device. Elevator doors shall be provided with a reopening device complying with Section 407.3.3 that shall stop and reopen a car door and hoistway door automatically if the door becomes obstructed by an object or person.

Exception: In existing elevators, manually operated doors shall not be required to comply with Section 407.3.3.

407.3.3.1 Height. The reopening device shall be activated by sensing an obstruction passing through the opening at 5 inches (125 mm) nominal and 29 inches (735 mm) nominal above the floor.

407.3.3.2 Contact. The reopening device shall not require physical contact to be activated, although contact shall be permitted before the door reverses.

407.3.3.3 Duration. The reopening device shall remain effective for 20 seconds minimum.

407.3.4 Door and signal timing. The minimum acceptable time from notification that a car is answering a call until the doors of that car start to close shall be calculated from the following equation:

T = D/(1.5 ft/s) or T = D/(455 mm/s) = 5 seconds minimum, where T equals the total time in seconds and D equals the distance (in feet or millimeters) from the point in the lobby or corridor 60 inches (1525 mm) directly in front of the farthest call button controlling that car to the centerline of its hoistway door.

Exceptions:

1. For cars with in-car lanterns, T shall be permitted to begin when the signal is visible from the point 60 inches (1525 mm) directly in front of the farthest hall call button and the audible signal is sounded.
2. Destination-oriented elevators shall not be required to comply with Section 407.3.4.

407.3.5 Door delay. Elevator doors shall remain fully open in response to a car call for 3 seconds minimum.

407.3.6 Width. Elevator door clear opening width shall comply with Table 407.4.1.

Exception: In existing elevators, a power-operated car door complying with Section 404.2.2 shall be permitted.

407.4 Elevator car requirements. Elevator cars shall comply with Section 407.4.

407.4.1 Inside Dimensions. Inside dimensions of elevator cars shall comply with Table 407.4.1.

Exception: Existing elevator car configurations that provide a clear floor area of 16 square feet (1.5 m^2) minimum, and provide a clear inside dimension of 36 inches (915 mm) minimum in width and 54 inches (1370 mm) minimum in depth, shall be permitted.

407.4.2 Floor Surfaces. Floor surfaces in elevator cars shall comply with Section 302.

407.4.3 Platform to hoistway clearance. The clearance between the car platform sill and the edge of any hoistway landing shall comply with Minnesota Rules, Chapter 1307, Minnesota Elevators and Related Devices.

407.4.4 Leveling. Each car shall automatically stop and maintain position at floor landings within a tolerance of $^1/_2$ inch (13 mm) under rated loading to zero loading conditions.

407.4.5 Illumination. The level of illumination at the car controls, platform, car threshold, and car landing sill shall comply with Minnesota Rules, Chapter 1307, Minnesota Elevators and Related Devices.

407.4.6 Elevator car controls. Where provided, elevator car controls shall comply with Sections 407.4.6 and 309.

Exception: In existing elevators, where a new car operating panel complying with Section 407.4.6 is provided, existing car operating panels shall not be required to comply with Section 407.4.6.

TABLE 407.4.1
MINIMUM DIMENSIONS OF ELEVATOR CARS

DOOR LOCATION	DOOR CLEAR OPENING WIDTH	INSIDE CAR, SIDE TO SIDE	INSIDE CAR, BACK WALL TO FRONT RETURN	INSIDE CAR, BACK WALL TO INSIDE FACE
Centered	42 inches (1065 mm)	80 inches (2030 mm)	51 inches (1295 mm)	54 inches (1370 mm)
Side (off center)	36 inches (915 mm)[1]	68 inches (1725 mm)	51 inches (1295 mm)	54 inches (1370 mm)
Any	36 inches (915 mm)[1]	54 inches (1370 mm)	80 inches (2030 mm)	80 inches (2030 mm)
Any	36 inches (915 mm)[1]	60 inches (1525 mm)[2]	60 inches (1525 mm)[2]	60 inches (1525 mm)[2]

1. A tolerance of minus $^5/_8$ inch (16 mm) is permitted.
2. Other car configurations that provide a 36-inch (915 mm) door clear opening width and a turning space complying with Section 304 with the door closed are permitted.

INTERNATIONAL CODE COUNCIL®
Copyright © 2014 ICC. ALL RIGHTS RESERVED. Accessed by William Munson on Jan 4, 2017 9:33:41 PM pursuant to License Agreement with ICC. No further reproduction or distribution authorized. ANY UNAUTHORIZED REPRODUCTION OR DISTRIBUTION IS A VIOLATION OF THE FEDERAL COPYRIGHT ACT AND THE LICENSE AGREEMENT, AND SUBJECT TO CIVIL AND CRIMINAL PENALTIES THEREUNDER.

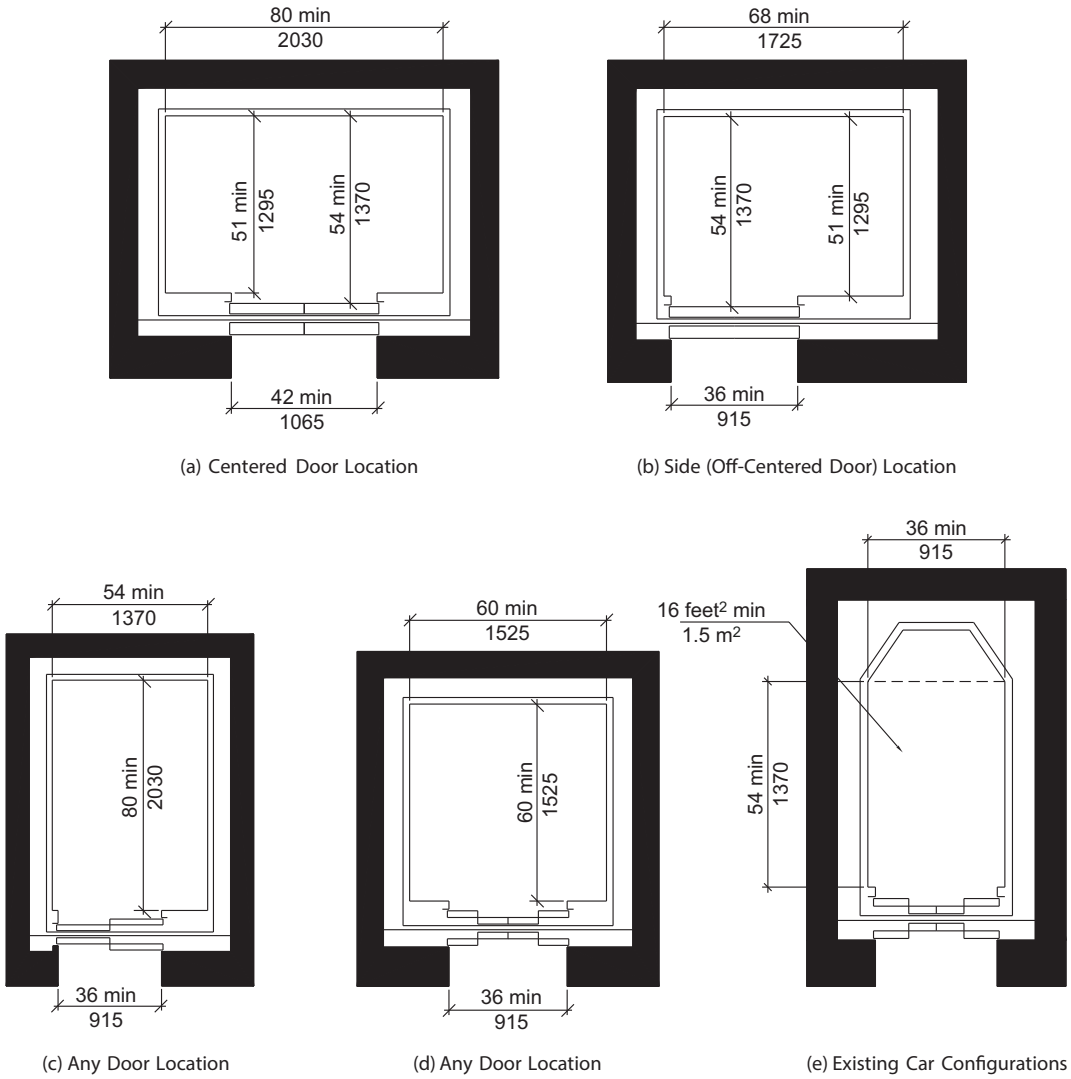

FIGURE 407.4.1
INSIDE DIMENSIONS OF ELEVATOR CARS

407.4.6.1 Location. Controls shall be located within one of the reach ranges specified in Section 308.

Exceptions:

1. Where the elevator panel complies with Section 407.4.8.
2. In existing elevators, where a parallel approach is provided to the controls, car control buttons with floor designations shall be permitted to be located 54 inches (1370 mm) maximum above the floor. Where the panel is changed, it shall comply with Section 407.4.6.1.

407.4.6.2 Buttons. Car control buttons with floor designations shall be raised or flush, and shall comply with Section 407.4.6.2.

Exception: In existing elevators, buttons shall be permitted to be recessed.

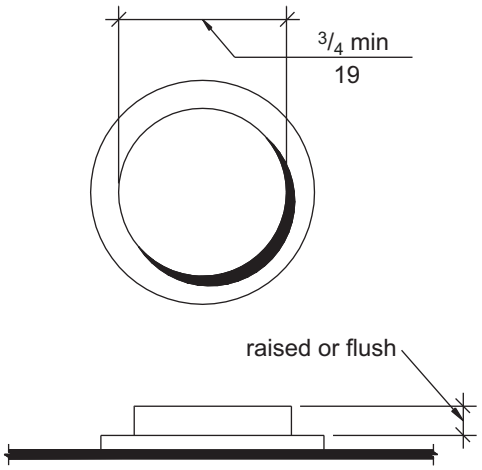

FIGURE 407.4.6.2
ELEVATOR CAR CONTROL BUTTONS

INTERNATIONAL CODE COUNCIL®
Copyright © 2014 ICC. ALL RIGHTS RESERVED. Accessed by William Munson on Jan 4, 2017 9:33:41 PM pursuant to License Agreement with ICC. No further reproduction or distribution authorized. ANY UNAUTHORIZED REPRODUCTION OR DISTRIBUTION IS A VIOLATION OF THE FEDERAL COPYRIGHT ACT AND THE LICENSE AGREEMENT, AND SUBJECT TO CIVIL AND CRIMINAL PENALTIES THEREUNDER.

407.4.6.2.1 Size. Buttons shall be $^3/_4$ inch (19 mm) minimum in their smallest dimension.

407.4.6.2.2 Arrangement. Buttons shall be arranged with numbers in ascending order. Floors shall be designated . . . -4, -3, -2, -1, 0, 1, 2, 3, 4, etcetera, with floors below the main entry floor designated with minus numbers. Numbers shall be permitted to be omitted, provided the remaining numbers are in sequence. Where a telephone keypad arrangement is used, the number key ("#") shall be utilized to enter the minus symbol ("-"). When two or more columns of buttons are provided they shall read from left to right.

407.4.6.3 Keypads. Where provided, car control keypads shall be in a standard telephone keypad arrangement and shall comply with Section 407.4.7.2.

407.4.6.4 Emergency controls. Emergency controls shall comply with Section 407.4.6.4.

407.4.6.4.1 Height. Emergency control buttons shall have their centerlines 35 inches (890 mm) minimum above the floor.

407.4.6.4.2 Location. Emergency controls, including the emergency alarm, shall be grouped at the bottom of the panel.

407.4.7 Designations and indicators of car controls. Designations and indicators of car controls shall comply with Section 407.4.7.

Exceptions:

1. In existing elevators, where a new car operating panel complying with Section 407.4.7 is provided, existing car operating panels shall not be required to comply with Section 407.4.7.
2. Where existing building floor designations differ from the arrangement required by Section 407.4.6.2.2, or are alphanumeric, a new operating panel shall be permitted to use such existing building floor designations.

407.4.7.1 Buttons. Car control buttons shall comply with Section 407.4.7.1.

407.4.7.1.1 Type. Control buttons shall be identified by raised characters and braille complying with Sections 703.3 and 703.4.

407.4.7.1.2 Location. Raised character and braille designations shall be placed immediately to the left of the control button to which the designations apply. Where a negative number is used to indicate a negative floor, the braille designation shall be a cell with the dots 3 and 6 followed by the ordinal number.

Exception: Where space on an existing car operating panel precludes raised characters and braille to the left of the control button, markings shall be placed as near to the control button as possible.

407.4.7.1.3 Symbols. The control button for the emergency stop, alarm, door open, door close, main entry floor, and phone, shall be identified with raised symbols and braille as shown in Table 407.4.7.1.3.

407.4.7.1.4 Visible indicators. Buttons with floor designations shall be provided with visible indicators to show that a call has been registered. The visible indication shall extinguish when the car arrives at the designated floor.

407.4.7.2 Keypads. Keypad keys shall be identified by visual characters complying with Section 703.2 centered on the corresponding keypad button. The number five key shall have a single raised dot. The dot shall have a base diameter of 0.118 inch (3 mm) minimum and 0.120 inch (3.05 mm) maximum, and a height of 0.025 inch (0.6 mm) minimum and 0.037 inch (0.9 mm) maximum.

407.4.8 Elevator car call sequential step scanning. Elevator car call sequential step scanning shall be provided where car control buttons are provided more than 48 inches (1220 mm) above the floor. Floor selection shall be accomplished by applying momentary or constant pressure to the up or down scan button. The up scan button shall sequentially select floors above the current floor. The down scan button shall sequentially select floors below the current floor. When pressure is removed from the up or down scan button for more than 2 seconds, the last floor selected shall be registered as a car call. The up and down scan button shall be located adjacent to or immediately above the emergency control buttons.

407.4.9 Car position indicators. Audible and visible car position indicators shall be provided in elevator cars.

407.4.9.1 Visible indicators. Visible indicators shall comply with Section 407.4.9.1.

407.4.9.1.1 Size. Characters shall be $^1/_2$ inch (13 mm) minimum in height.

407.4.9.1.2 Location. Indicators shall be located above the car control panel or above the door.

407.4.9.1.3 Floor arrival. As the car passes a floor and when a car stops at a floor served by the elevator, the corresponding character shall illuminate.

Exception: Destination-oriented elevators shall not be required to comply with Section 407.4.9.1.3, provided the visible indicators extinguish when the call has been answered.

407.4.9.1.4 Destination indicator. In destination-oriented elevators, a display shall be provided in the car with visible indicators to show car destinations.

INTERNATIONAL CODE COUNCIL®
Copyright © 2014 ICC. ALL RIGHTS RESERVED. Accessed by William Munson on Jan 4, 2017 9:33:41 PM pursuant to License Agreement with ICC. No further reproduction or distribution authorized. ANY UNAUTHORIZED REPRODUCTION OR DISTRIBUTION IS A VIOLATION OF THE FEDERAL COPYRIGHT ACT AND THE LICENSE AGREEMENT, AND SUBJECT TO CIVIL AND CRIMINAL PENALTIES THEREUNDER.

Control Button Type	Raised Symbol	Braille Message	Proportions (Open circles indicate unused dots within each braille cell
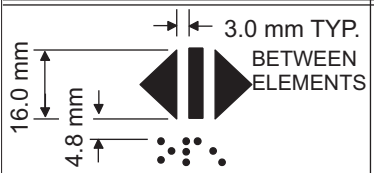 DOOR OPEN		op“en”	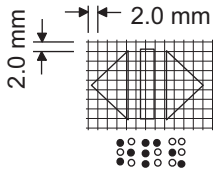
REAR/SIDE DOOR OPEN		op“en”	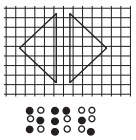
DOOR CLOSE		close	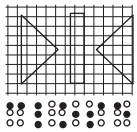
REAR/SIDE DOOR CLOSE		close	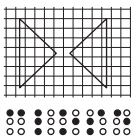
MAIN		ma“in”	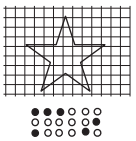
ALARM		al“ar”m	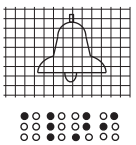
PHONE		ph“one”	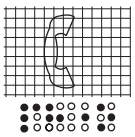
EMERGENCY STOP (WHEN PROVIDED) X on face of octagon is not required to be tactile		“st”op	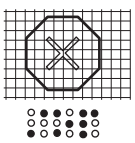

TABLE 407.4.7.1.3
CONTROL BUTTON IDENTIFICATION

INTERNATIONAL CODE COUNCIL®
Copyright © 2014 ICC. ALL RIGHTS RESERVED. Accessed by William Munson on Jan 4, 2017 9:33:41 PM pursuant to License Agreement with ICC. No further reproduction or distribution authorized. ANY UNAUTHORIZED REPRODUCTION OR DISTRIBUTION IS A VIOLATION OF THE FEDERAL COPYRIGHT ACT AND THE LICENSE AGREEMENT, AND SUBJECT TO CIVIL AND CRIMINAL PENALTIES THEREUNDER.

407.4.9.2 Audible indicators. Audible indicators shall comply with Section 407.4.9.2.

407.4.9.2.1 Signal type. The signal shall be an automatic verbal annunciator that announces the floor at which the car is about to stop. The verbal announcement indicating the floor shall be completed prior to the initiation of the door opening.

Exception: For elevators other than destination-oriented elevators that have a rated speed of 200 feet per minute (1 m/s) maximum, a non-verbal audible signal with a frequency of 1500 Hz maximum that sounds as the car passes or is about to stop at a floor served by the elevator shall be permitted.

407.4.9.2.2 Signal level. The verbal annunciator shall be 10 dBA minimum above ambient, but shall not exceed 80 dBA, measured at the annunciator.

407.4.9.2.3 Frequency. The verbal annunciator shall have a frequency of 300 Hz minimum and 3,000 Hz maximum.

407.4.10 Emergency communications. Emergency two-way communication systems between the elevator car and a point outside the hoistway shall comply with Section 407.4.10 and Minnesota Rules, Chapter 1307, Minnesota Elevators and Related Devices.

407.4.10.1 Height. The highest operable part of a two-way communication system shall comply with Section 308.

407.4.10.2 Identification. Raised characters and braille complying with Sections 703.3 and 703.4 and raised symbols complying with Section 407.4.7.1.3 shall be provided adjacent to the device.

SECTION 408
LIMITED-USE/LIMITED-APPLICATION ELEVATORS

408.1 General. Limited-use/limited-application elevators shall comply with Section 408 and Minnesota Rules, Chapter 1307, Minnesota Elevators and Related Devices. Elevator operation shall be automatic. Limited-use/limited-application elevators shall not be attendant or key operated and shall provide unassisted entry and exit from the elevator.

Exception: When approved by the administrative authority, attendant or key operation shall be permitted when all occupants have controlled or restricted access to the space served by the elevator.

408.2 Elevator landing requirements. Landings serving limited-use/limited application elevators shall comply with Section 408.2.

408.2.1 Call controls. Elevator call buttons and keypads shall comply with Section 407.2.1.

408.2.2 Hall signals. Hall signals shall comply with Section 407.2.2.

408.2.3 Hoistway signs. Signs at elevator hoistways shall comply with Section 407.2.3.

408.3 Elevator door requirements. Elevator hoistway doors shall comply with Section 408.3.

408.3.1 Sliding doors. Sliding hoistway and car doors shall comply with Sections 407.3.1 through 407.3.3, and 408.3.3.

408.3.2 Swinging doors. Swinging hoistway doors shall open and close automatically and shall comply with Sections 408.3.2, 404, and 407.3.2.

408.3.2.1 Power operation. Swinging doors shall be power-operated and shall comply with ANSI/BHMA A156.19 listed in Section 105.2.3.

408.3.2.2 Duration. Power-operated swinging doors shall remain open for 20 seconds minimum when activated.

408.3.3 Door Location and width. Car doors shall comply with Section 408.3.3.

408.3.3.1 Cars with single door or doors on opposite ends. Car doors shall be positioned at the narrow end of cars with a single door and on cars with doors on opposite ends. Doors shall provide a clear opening width of 32 inches (815 mm) minimum.

408.3.3.2 Cars with doors on adjacent sides. Car doors shall be permitted to be located on adjacent sides of cars that provide an 18 square foot (1.67 m^2) platform. Doors located on the narrow end of cars shall provide a clear opening width of 36 inches (915 mm) minimum. Doors located on the long side shall provide a clear opening width of 42 inches (1065 mm) minimum and be located as far as practicable from the door on the narrow end.

Exception: Car doors that provide a clear opening width of 36 inches (915 mm) minimum shall be permitted to be located on adjacent sides of cars that provide a clear floor area of 51 inches (1295 mm) in width and 51 inches (1295 mm) in depth.

408.4 Elevator car requirements. Elevator cars shall comply with Section 408.4.

408.4.1 Inside dimensions. Elevator cars shall provide a clear floor width of 42 inches (1065 mm) minimum. The clear floor area shall not be less than 15.75 square feet (1.46 m^2).

Exception: For installations in existing buildings, elevator cars that provide a clear floor area of 15 square feet (1.4 m^2) minimum, and provide a clear inside dimension of 36 inches (915 mm) minimum in width and 54 inches (1370 mm) minimum in depth, shall be permitted. This exception shall not apply to cars with doors on adjacent sides.

408.4.2 Floor surfaces. Floor surfaces in elevator cars shall comply with Section 302.

408.4.3 Platform to hoistway clearance. The clearance between the car platform sill and the edge of any hoistway landing shall comply with Minnesota Rules, Chapter 1307, Minnesota Elevators and Related Devices.

INTERNATIONAL CODE COUNCIL®
Copyright © 2014 ICC. ALL RIGHTS RESERVED. Accessed by William Munson on Jan 4, 2017 9:33:41 PM pursuant to License Agreement with ICC. No further reproduction or distribution authorized. ANY UNAUTHORIZED REPRODUCTION OR DISTRIBUTION IS A VIOLATION OF THE FEDERAL COPYRIGHT ACT AND THE LICENSE AGREEMENT, AND SUBJECT TO CIVIL AND CRIMINAL PENALTIES THEREUNDER.

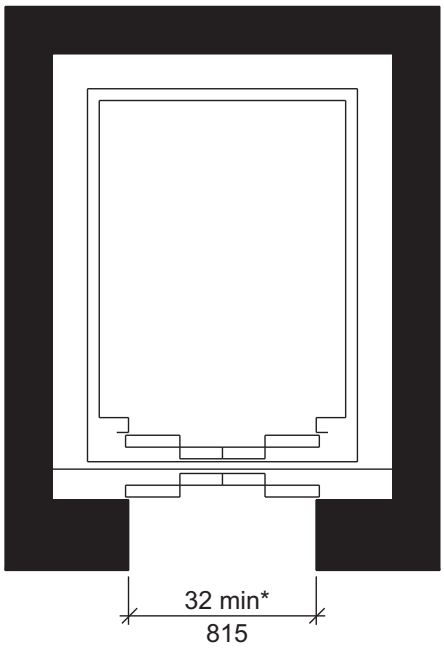

(a) Car with Single Door

*Door opening size from Section 408.3.3

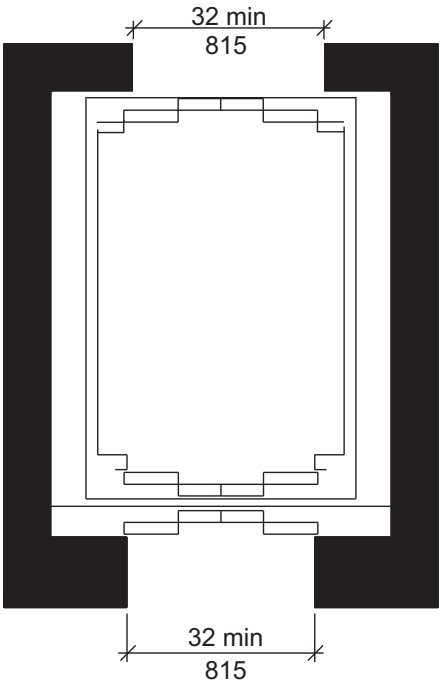

(b) Doors on Opposite Sides

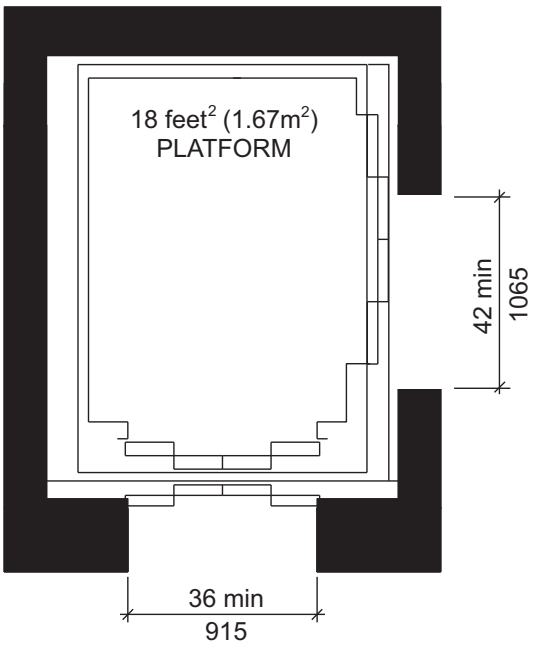

(c) Doors on Adjacent Sides

FIGURE 408.3.3
DOOR LOCATION FOR LIMITED USE/LIMITED APPLICATION (LULA) ELEVATORS

INTERNATIONAL CODE COUNCIL®
Copyright © 2014 ICC. ALL RIGHTS RESERVED. Accessed by William Munson on Jan 4, 2017 9:33:41 PM pursuant to License Agreement with ICC. No further reproduction or distribution authorized. ANY UNAUTHORIZED REPRODUCTION OR DISTRIBUTION IS A VIOLATION OF THE FEDERAL COPYRIGHT ACT AND THE LICENSE AGREEMENT, AND SUBJECT TO CIVIL AND CRIMINAL PENALTIES THEREUNDER.

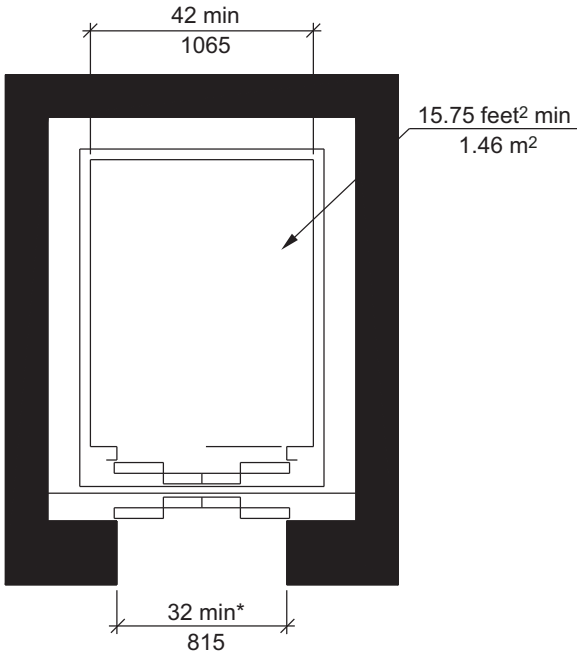

(a) New Construction

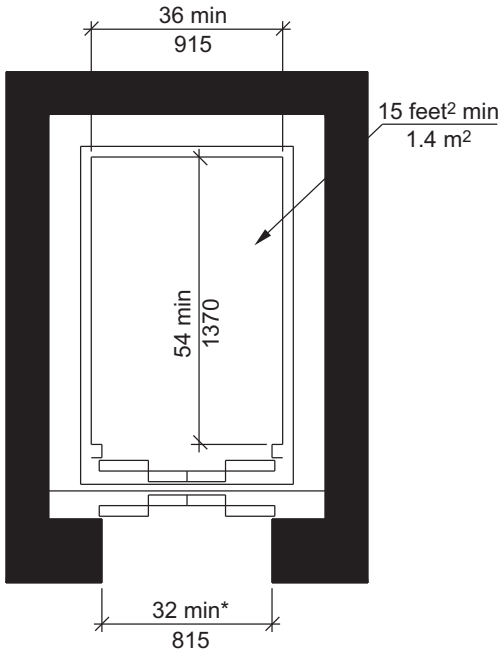

(b) Existing Building Exception

*Door opening size from Section 408.3.3

FIGURE 408.4.1
INSIDE DIMENSIONS OF LIMITED USE/LIMITED APPLICATION (LULA) ELEVATOR CARS

INTERNATIONAL CODE COUNCIL®
Copyright © 2014 ICC. ALL RIGHTS RESERVED. Accessed by William Munson on Jan 4, 2017 9:33:41 PM pursuant to License Agreement with ICC. No further reproduction or distribution authorized. ANY UNAUTHORIZED REPRODUCTION OR DISTRIBUTION IS A VIOLATION OF THE FEDERAL COPYRIGHT ACT AND THE LICENSE AGREEMENT, AND SUBJECT TO CIVIL AND CRIMINAL PENALTIES THEREUNDER.

408.4.4 Leveling. Elevator car leveling shall comply with Section 407.4.4.

408.4.5 Illumination. Elevator car illumination shall comply with Section 407.4.5.

408.4.6 Elevator car controls. Elevator car controls shall comply with Section 407.4.6. Control panels shall be centered on a side wall.

408.4.7 Designations and indicators of car controls. Designations and indicators of car controls shall comply with Section 407.4.7.

408.4.8 Emergency communications. Car emergency signaling devices complying with Section 407.4.10 shall be provided.

SECTION 409
PRIVATE RESIDENCE ELEVATORS

409.1 General. Private residence elevators shall comply with Section 409 and Minnesota Rules, Chapter 1307, Minnesota Elevators and Related Devices. Elevator operation shall be automatic.

Exception: Elevators complying with Section 407 or 408 shall not be required to comply with Section 409.

409.2 Call Controls. Call buttons at elevator landings shall comply with Section 309. Call buttons shall be $^3/_4$ inch (19 mm) minimum in their smallest dimension.

409.3 Doors and gates. Elevator car and hoistway doors and gates shall comply with Sections 409.3 and 404.

Exception: The maneuvering clearances required by Section 404.2.3 shall not apply for approaches to the push side of swinging doors.

409.3.1 Power operation. Elevator car doors and gates shall be power operated and shall comply with ANSI/BHMA A156.19 listed in Section 105.2.3. Elevator cars with a single opening shall have low energy power operated hoistway doors and gates.

Exception: Hoistway doors or gates shall be permitted to be of the self-closing, manual type, where that door or gate provides access to a narrow end of the car that serves only one landing.

409.3.2 Duration. Power operated doors and gates shall remain open for 20 seconds minimum when activated.

409.3.3 Door or gate location and width. Car gates or doors positioned at a narrow end of the clear floor area required by Section 409.4.1 shall provide a clear opening width of 32 inches (815 mm) minimum. Car gates or doors positioned on adjacent sides shall provide a clear opening width of 42 inches (1065 mm) minimum.

409.4 Elevator car requirements. Elevator cars shall comply with Section 409.4.

409.4.1 Inside Dimensions. Elevator cars shall provide a clear floor area 36 inches (915 mm) minimum in width and 48 inches (1220 mm) minimum in depth.

409.4.2 Floor surfaces. Floor surfaces in elevator cars shall comply with Section 302.

409.4.3 Platform to hoistway clearance. The clearance between the car platform sill and the edge of any hoistway landing shall be $1^1/_4$ inches (32 mm) maximum.

409.4.4 Leveling. Each car shall automatically stop at a floor landing within a tolerance of $^1/_2$ inch (13 mm) under rated loading to zero loading conditions.

409.4.5 Illumination. The level of illumination at the car controls, platform, and car threshold and landing sill shall be 5 foot-candles (54 lux) minimum.

409.4.6 Elevator car controls. Elevator car controls shall comply with Sections 409.4.6 and 309.4.

409.4.6.1 Buttons. Control buttons shall be $^3/_4$ inch (19 mm) minimum in their smallest dimension. Control buttons shall be raised or flush.

409.4.6.2 Height. Buttons with floor designations shall comply with Section 309.3.

409.4.6.3 Location. Controls shall be on a sidewall, 12 inches (305 mm) minimum from any adjacent wall.

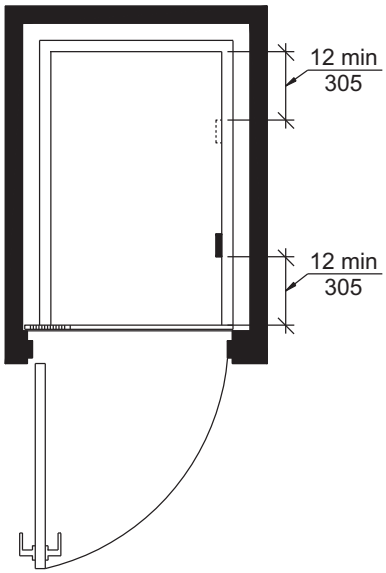

FIGURE 409.4.6.3
LOCATION OF CONTROLS IN PRIVATE RESIDENCE ELEVATORS

409.4.7 Emergency communications. Emergency communications systems shall comply with Section 409.4.7.

409.4.7.1 Type. A telephone and emergency signal device shall be provided in the car.

409.4.7.2 Operable parts. The telephone and emergency signaling device shall comply with Section 309.3 and 309.4.

409.4.7.3 Compartment. If the device is in a closed compartment, the compartment door hardware shall comply with Section 309.

409.4.7.4 Cord. The telephone cord shall be 29 inches (735 mm) minimum in length.

INTERNATIONAL CODE COUNCIL®
Copyright © 2014 ICC. ALL RIGHTS RESERVED. Accessed by William Munson on Jan 4, 2017 9:33:41 PM pursuant to License Agreement with ICC. No further reproduction or distribution authorized. ANY UNAUTHORIZED REPRODUCTION OR DISTRIBUTION IS A VIOLATION OF THE FEDERAL COPYRIGHT ACT AND THE LICENSE AGREEMENT, AND SUBJECT TO CIVIL AND CRIMINAL PENALTIES THEREUNDER.

SECTION 410
PLATFORM LIFTS

410.1 General. Platform lifts shall comply with Section 410 and Minnesota Rules, Chapter 1307, Minnesota Elevators and Related Devices. Platform lifts shall not be attendant or key operated and shall provide unassisted entry and exit from the lift.

Exception: When approved by the administrative authority, attendant or key operation shall be permitted when all occupants have controlled or restricted access to the space served by the lift.

410.2 Lift entry. Lifts with doors or gates shall comply with Section 410.2.1. Lifts with ramps shall comply with Section 410.2.2.

410.2.1 Doors and gates. Doors and gates shall be low energy power operated doors or gates complying with Section 404.3. Doors shall remain open for 20 seconds minimum. On lifts with one door or with doors on opposite ends, the end door clear opening width shall be 32 inches (815 mm) minimum. On lifts with one door on a narrow end and one door on a long side, the end door clear opening width shall be 36 inches (915 mm) minimum. Side door clear opening width shall be 42 inches (1065 mm) minimum. Where a door is provided on a long side and on a narrow end of a lift, the side door shall be located with either the strike side or the hinge side in the corner furthest from the door on the narrow end.

Exceptions:

1. Doors or gates shall be permitted to be of the self-closing, manual type, where that door or gate provides access to a narrow end of the platform that serves only one landing. This exception shall not apply to doors or gates with ramps.
2. Lifts serving two landings maximum and having doors or gates on adjacent sides shall be permitted to have self closing manual doors or gates provided that the side door or gate is located with the strike side furthest from the end door. This exception shall not apply to door or gates with ramps.

410.2.2 Ramps. Ramp widths shall not be less than the platform opening they serve.

410.3 Floor Surfaces. Floor surfaces of platform lifts shall comply with Section 302.

410.4 Platform to runway clearance. The clearance between the platform sill and the edge of any runway landing shall be $1^1/_4$ inch (32 mm) maximum.

410.5 Clear floor space. Clear floor space of platform lifts shall comply with Section 410.5.

410.5.1 Lifts with single door or doors on opposite ends. Platform lifts with a single door or with doors on opposite ends shall provide a clear floor width of 36 inches (915 mm) minimum and a clear floor depth of 48 inches (1220 mm) minimum.

410.5.2 Lifts with doors on adjacent sides. Platform lifts with doors on adjacent sides shall provide a clear floor width of 42 inches (1065 mm) minimum and a clear floor depth of 60 inches (1525 mm) minimum.

Exception: Deleted.

410.6 Operable parts. Controls for platform lifts shall comply with Section 309.

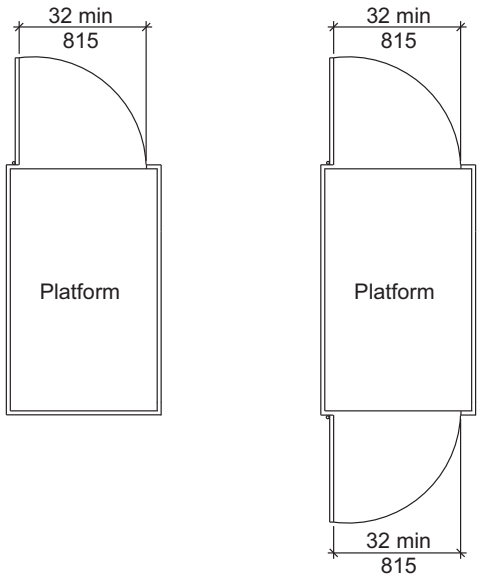

(a) Platform lift with door at one end or opposite ends

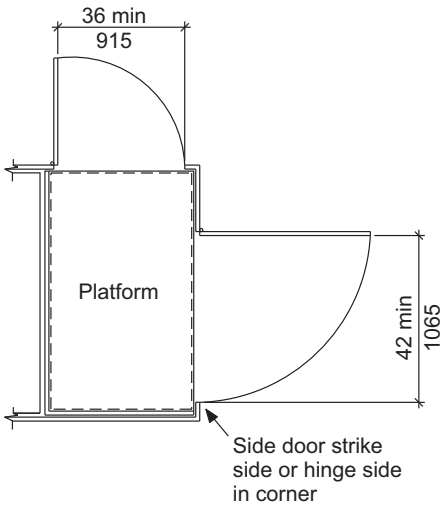

(b) Platform with doors on adjacent sides

FIGURE 410.2.1
PLATFORM LIFT DOORS AND GATES

INTERNATIONAL CODE COUNCIL®
Copyright © 2014 ICC. ALL RIGHTS RESERVED. Accessed by William Munson on Jan 4, 2017 9:33:41 PM pursuant to License Agreement with ICC. No further reproduction or distribution authorized. ANY UNAUTHORIZED REPRODUCTION OR DISTRIBUTION IS A VIOLATION OF THE FEDERAL COPYRIGHT ACT AND THE LICENSE AGREEMENT, AND SUBJECT TO CIVIL AND CRIMINAL PENALTIES THEREUNDER.

INTERNATIONAL CODE COUNCIL®
Copyright © 2014 ICC. ALL RIGHTS RESERVED. Accessed by William Munson on Jan 4, 2017 9:33:41 PM pursuant to License Agreement with ICC. No further reproduction or distribution authorized. ANY UNAUTHORIZED REPRODUCTION OR DISTRIBUTION IS A VIOLATION OF THE FEDERAL COPYRIGHT ACT AND THE LICENSE AGREEMENT, AND SUBJECT TO CIVIL AND CRIMINAL PENALTIES THEREUNDER.

CHAPTER 5
GENERAL SITE AND BUILDING ELEMENTS

SECTION 501
GENERAL

501.1 Scope. General site and building elements required to be accessible by the scoping provisions adopted by the administrative authority shall comply with the applicable provisions of Chapter 5.

SECTION 502
PARKING SPACES

502.1 General. Accessible car and van parking spaces shall comply with Section 502.

502.2 Vehicle space size. Car and van parking spaces shall be 96 inches (2440 mm) minimum in width.

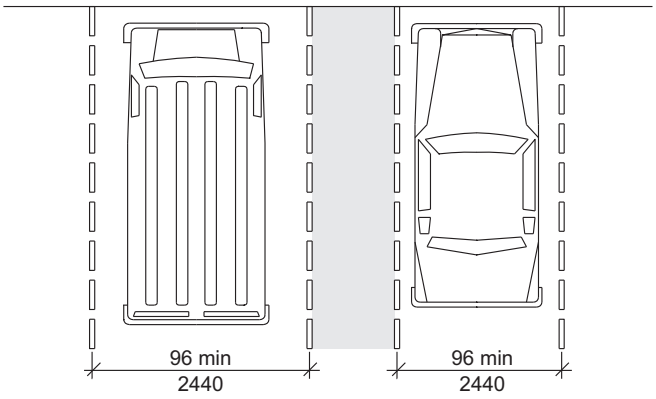

FIGURE 502.2
VEHICLE PARKING SPACE SIZE

502.3 Vehicle space marking. Car and van parking spaces shall be marked to define the width. Where parking spaces are marked with lines, the width measurements of parking spaces and adjacent access aisles shall be made from the centerline of the markings.

Exception: Where parking spaces or access aisles are not adjacent to another parking space or access aisle, measurements shall be permitted to include the full width of the line defining the parking space or access aisle.

502.4 Access aisle. Car and van parking spaces shall have an adjacent access aisle complying with Section 502.4.

502.4.1 Location. Access aisles shall adjoin an accessible route. Two parking spaces shall be permitted to share a common access aisle. Access aisles shall not overlap with the vehicular way. Parking spaces shall be permitted to have access aisles placed on either side of the car or van parking space. Van parking spaces that are angled shall have access aisles located on the passenger side of the parking space.

502.4.2 Width. Access aisles serving car and van parking spaces shall be 96 inches (2440 mm) minimum in width.

502.4.3 Length. Access aisles shall extend the full length of the parking spaces they serve.

502.4.4 Marking. Access aisles shall be marked so as to discourage parking in them and be provided with the designation "no parking." The "no parking" designation shall be provided on a sign centered at the head end of the access aisle a maximum of 96 inches (2440 mm) from the head of the access aisle, and be mounted 60 inches (1525 mm) minimum and 66 inches (1676 mm) maximum above the floor of the access aisle, measured to the bottom of the sign. Where access aisles are marked with lines, the width

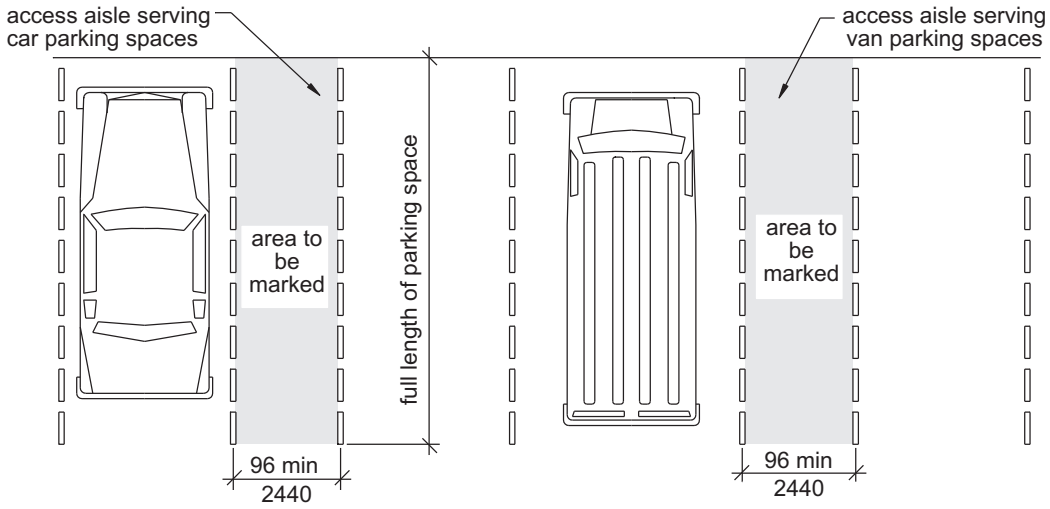

FIGURE 502.4
PARKING SPACE ACCESS AISLE

INTERNATIONAL CODE COUNCIL®
Copyright © 2014 ICC. ALL RIGHTS RESERVED. Accessed by William Munson on Jan 4, 2017 9:33:41 PM pursuant to License Agreement with ICC. No further reproduction or distribution authorized. ANY UNAUTHORIZED REPRODUCTION OR DISTRIBUTION IS A VIOLATION OF THE FEDERAL COPYRIGHT ACT AND THE LICENSE AGREEMENT, AND SUBJECT TO CIVIL AND CRIMINAL PENALTIES THEREUNDER.

measurements of access aisles and adjacent parking spaces shall be made from the centerline of the markings.

Exceptions:

1. A sign indicating no parking shall not be required where the sign would obstruct a curb ramp or pedestrian route. In this case, the no parking designation shall be provided on the surface of the access aisle.
2. A sign indicating no parking shall not be required where parking spaces and access aisles are enclosed or otherwise protected from the elements. In this case, the no parking designation shall be provided on the surface of the access aisle.
3. Where access aisles or parking spaces are not adjacent to another access aisle or parking space, measurements shall be permitted to include the full width of the line defining the access aisle or parking space.

502.5 Floor Surfaces. Parking spaces and access aisles shall comply with Section 302 and have surface slopes not steeper than 1:48. Access aisles shall be at the same level as the parking spaces they serve.

502.6 Vertical clearance. A vertical clearance of 98 inches (2490 mm) minimum shall be provided at the following locations:

1. Parking spaces for vans.
2. The access aisles serving parking spaces for vans.
3. The vehicular routes serving parking spaces for vans.

502.7 Identification. Accessible parking spaces shall be identified by signs complying with Minnesota Statutes, Section 169.346, and include the International Symbol of Accessibility complying with Section 703.6.3.1. Where all accessible parking spaces do not provide a minimum vertical clearance of 98 inches (2490 mm), signs identifying van parking spaces shall contain the designation "van accessible." Signs shall be centered at the head end of the parking space a maximum of 96 inches (2440 mm) from the head of the parking space, and be mounted 60 inches (1525 mm) minimum and 66 inches (1676 mm) maximum above the floor of the parking space, measured to the bottom of the sign.

Exception: Parallel parking spaces shall have a sign located on the side, at the head end of the parking space.

502.8 Relationship to accessible routes. Parking spaces and access aisles shall be designed so that cars and vans, when parked, cannot obstruct the required clear width of adjacent accessible routes.

SECTION 503
PASSENGER LOADING ZONES

503.1 General. Accessible passenger loading zones shall comply with Section 503.

503.2 Vehicle pull-up space size. Passenger loading zones shall provide a vehicular pull-up space 96 inches (2440 mm) minimum in width and 20 feet (6095 mm) minimum in length.

503.3 Access aisle. Passenger loading zones shall have an adjacent access aisle complying with Section 503.3.

503.3.1 Location. Access aisles shall adjoin an accessible route. Access aisles shall not overlap the vehicular way.

503.3.2 Width. Access aisles serving vehicle pull-up spaces shall be 60 inches (1525 mm) minimum in width.

503.3.3 Length. Access aisles shall be 20 feet (6095 mm) minimum in length.

503.3.4 Marking. Access aisles shall be marked so as to discourage parking in them.

503.4 Floor surfaces. Vehicle pull-up spaces and access aisles serving them shall comply with Section 302 and shall have slopes not steeper than 1:48. Access aisles shall be at the same level as the vehicle pull-up space they serve.

503.5 Vertical clearance. A vertical clearance of 114 inches (2895 mm) minimum shall be provided at the following locations:

1. Vehicle pull-up spaces;
2. The access aisles serving vehicle pull-up spaces;
3. A vehicular route from an entrance to the passenger loading zone, and;
4. A vehicular route from the passenger loading zone to a vehicular exit serving vehicle pull-up spaces.

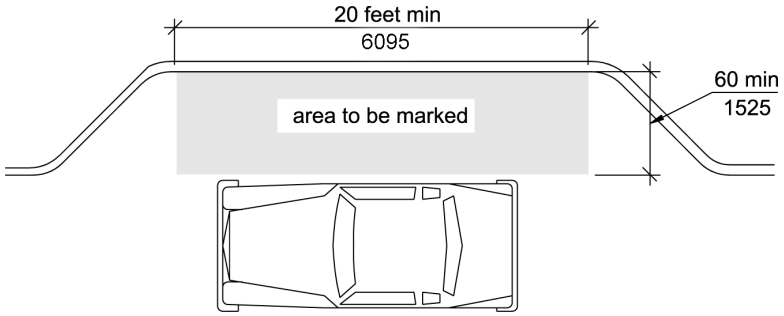

FIGURE 503.3
PASSENGER LOADING ZONE ACCESS AISLE

INTERNATIONAL CODE COUNCIL®
Copyright © 2014 ICC. ALL RIGHTS RESERVED. Accessed by William Munson on Jan 4, 2017 9:33:41 PM pursuant to License Agreement with ICC. No further reproduction or distribution authorized. ANY UNAUTHORIZED REPRODUCTION OR DISTRIBUTION IS A VIOLATION OF THE FEDERAL COPYRIGHT ACT AND THE LICENSE AGREEMENT, AND SUBJECT TO CIVIL AND CRIMINAL PENALTIES THEREUNDER.

SECTION 504
STAIRWAYS

504.1 General. Accessible stairs shall comply with Section 504.

504.2 Treads and risers. All steps on a flight of stairs shall have uniform riser height and uniform tread depth. Risers shall be 4 inches (100 mm) minimum and 7 inches (180 mm) maximum in height. Treads shall be 11 inches (280 mm) minimum in depth.

504.3 Open risers. Open risers shall not be permitted.

504.4 Tread surface. Stair treads shall comply with Section 302 and shall have a slope not steeper than 1:48.

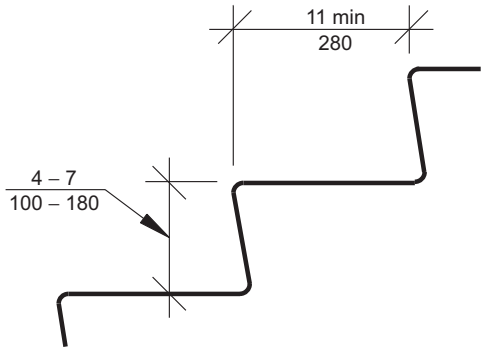

FIGURE 504.2
TREADS AND RISERS FOR ACCESSIBLE STAIRWAYS

504.5 Nosings. The radius of curvature at the leading edge of the tread shall be $^1/_2$ inch (13 mm) maximum. Nosings that project beyond risers shall have the underside of the leading edge curved or beveled. Risers shall be permitted to slope under the tread at an angle of 30 degrees maximum from vertical. The permitted projection of the nosing shall be $1^1/_2$ inches (38 mm) maximum over the tread or floor below.

504.5.1 Visual contrast. The leading 2 inches (51 mm) of the tread shall have visual contrast of dark-on-light or light-on-dark from the remainder of the tread.

504.6 Handrails. Stairs shall have handrails complying with Section 505.

504.7 Wet conditions. Stair treads and landings subject to wet conditions shall be designed to prevent the accumulation of water.

504.8 Lighting. Lighting for interior stairways shall comply with Section 504.8.

504.8.1 Illumination level. Lighting facilities shall be capable of providing 10 foot-candles (108 lux) of illuminance measured at the center of tread surfaces and on landing surfaces within 24 inches (610 mm) of step nosings.

504.8.2 Lighting controls. If provided, occupancy-sensing automatic controls shall activate the stairway lighting so the illuminance level required by Section 504.8.1 is provided on the entrance landing, each stair flight adjacent to the entrance landing, and on the landings above and below the entrance landing prior to any step being used.

504.9 Stair level identification. Stair level identification signs in raised characters and braille complying with Sections 703.3 and 703.4 shall be located at each floor level landing in all enclosed stairways adjacent to the door leading from the stairwell into the corridor to identify the floor level. The exit door discharging to the outside or to the level of exit discharge shall have a sign with raised characters and braille stating "EXIT."

SECTION 505
HANDRAILS

505.1 General. Handrails required by Section 405.8 for ramps, or Section 504.6 for stairs, shall comply with Section 505.

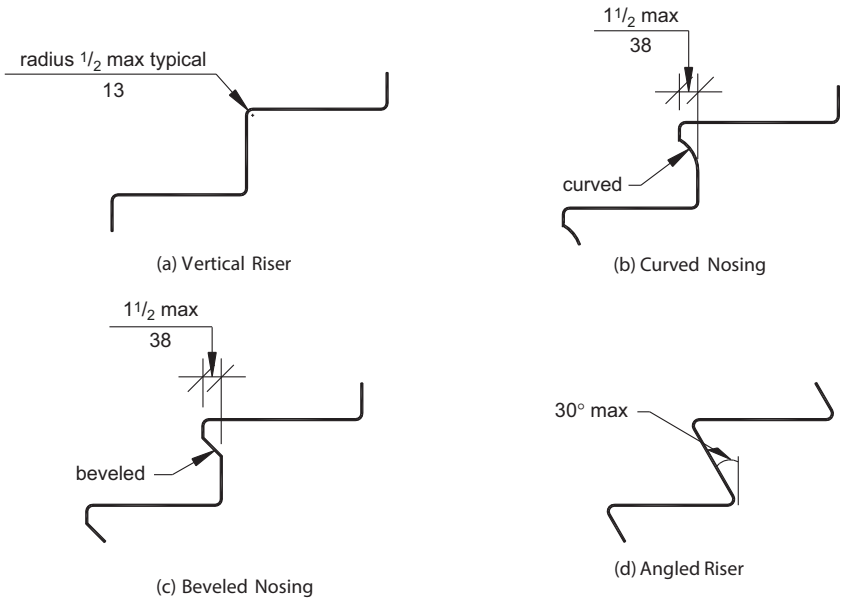

FIGURE 504.5
STAIR NOSINGS

INTERNATIONAL CODE COUNCIL®
Copyright © 2014 ICC. ALL RIGHTS RESERVED. Accessed by William Munson on Jan 4, 2017 9:33:41 PM pursuant to License Agreement with ICC. No further reproduction or distribution authorized. ANY UNAUTHORIZED REPRODUCTION OR DISTRIBUTION IS A VIOLATION OF THE FEDERAL COPYRIGHT ACT AND THE LICENSE AGREEMENT, AND SUBJECT TO CIVIL AND CRIMINAL PENALTIES THEREUNDER.

505.2 Location. Handrails shall be provided on both sides of stairs and ramps.

Exceptions:

1. In assembly seating areas, handrails shall not be required on both sides along aisle stairs, provided with a handrail either at the side or within the aisle.
2. In assembly seating areas, handrails shall not be required on the sides of ramped aisles serving seats.

505.3 Continuity. Handrails shall be continuous within the full length of each stair flight or ramp run. Inside handrails on switchback or dogleg stairs or ramps shall be continuous between flights or runs. Other handrails shall comply with Sections 505.10 and 307.

Exception: Handrails shall not be required to be continuous in aisles serving seating where handrails are discontinuous to provide access to seating and to permit crossovers within the aisles.

505.4 Height. Top of gripping surfaces of handrails shall be 34 inches (865 mm) minimum and 38 inches (965 mm) maximum vertically above stair nosings, ramp surfaces and walking surfaces. Handrails shall be at a consistent height above stair nosings, ramp surfaces and walking surfaces.

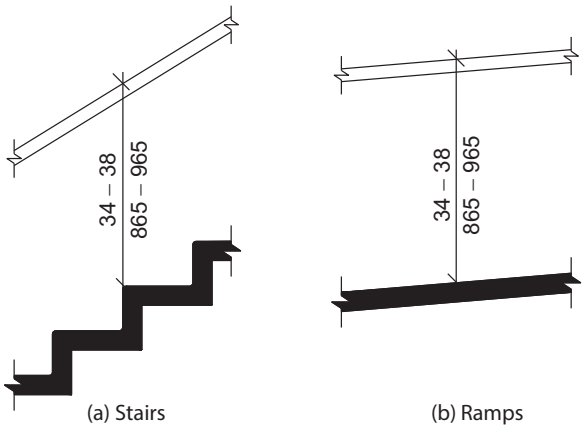

FIGURE 505.4
HANDRAIL HEIGHT

505.5 Clearance. Clearance between handrail gripping surface and adjacent surfaces shall be $1^1/_2$ inches (38 mm) minimum.

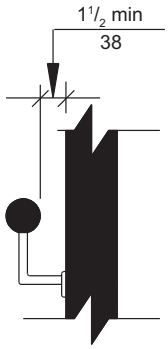

FIGURE 505.5
HANDRAIL CLEARANCE

505.6 Gripping surface. Gripping surfaces shall be continuous, without interruption by newel posts, other construction elements, or obstructions.

Exceptions:

1. Handrail brackets or balusters attached to the bottom surface of the handrail shall not be considered obstructions, provided the brackets or balusters comply with the following criteria:
   a. Not more than 20 percent of the handrail length is obstructed,
   b. Horizontal projections beyond the sides of the handrail occur $1^1/_2$ inches (38 mm) minimum below the bottom of the handrail, and provided that for each $^1/_2$ inch (13 mm) of additional handrail perimeter dimension above 4 inches (100 mm), the vertical clearance dimension of $1^1/_2$ inch (38 mm) can be reduced by $^1/_8$ inch (3.2 mm), and
   c. Edges shall be rounded.
2. Where handrails are provided along walking surfaces with slopes not steeper than 1:20, the bottoms of handrail gripping surfaces shall be permitted to be obstructed along their entire length where they are integral to crash rails or bumper guards.

505.7 Cross section. Handrails shall have a cross section complying with Section 505.7.1 or 505.7.2.

505.7.1 Circular cross section. Handrails with a circular cross section shall have an outside diameter of $1^1/_4$ inches (32 mm) minimum and 2 inches (51 mm) maximum.

505.7.2 Noncircular cross sections. Handrails with a noncircular cross section shall have a perimeter dimension of 4 inches (100 mm) minimum and $6^1/_4$ inches (160 mm) maximum, and a cross-section dimension of $2^1/_4$ inches (57 mm) maximum.

505.8 Surfaces. Handrails, and any wall or other surfaces adjacent to them, shall be free of any sharp or abrasive elements. Edges shall be rounded.

505.9 Fittings. Handrails shall not rotate within their fittings.

505.10 Handrail extensions. Handrails shall extend beyond and in the same direction of stair flights and ramp runs in accordance with Section 505.10.

Exceptions:

1. Continuous handrails at the inside turn of stairs and ramps.
2. Handrail extensions are not required in aisles serving seating where the handrails are discontinuous to provide access to seating and to permit crossovers within the aisle.
3. In alterations, full extensions of handrails shall not be required where such extensions would be hazardous due to plan configuration.

INTERNATIONAL CODE COUNCIL®
Copyright © 2014 ICC. ALL RIGHTS RESERVED. Accessed by William Munson on Jan 4, 2017 9:33:41 PM pursuant to License Agreement with ICC. No further reproduction or distribution authorized. ANY UNAUTHORIZED REPRODUCTION OR DISTRIBUTION IS A VIOLATION OF THE FEDERAL COPYRIGHT ACT AND THE LICENSE AGREEMENT, AND SUBJECT TO CIVIL AND CRIMINAL PENALTIES THEREUNDER.

505.10.1 Top and bottom extension at ramps. Ramp handrails shall extend horizontally above the landing 12 inches (305 mm) minimum beyond the top and bottom of ramp runs. Extensions shall return to a wall, guard, or floor, or shall be continuous to the handrail of an adjacent ramp run.

505.10.2 Top extension at stairs. At the top of a stair flight, handrails shall extend horizontally above the landing for 12 inches (305 mm) minimum beginning directly above the landing nosing. Extensions shall return to a wall, guard, or the landing surface, or shall be continuous to the handrail of an adjacent stair flight.

505.10.3 Bottom extension at stairs. At the bottom of a stair flight, handrails shall extend at the slope of the stair flight for a horizontal distance equal to one tread depth beyond the bottom tread nosing. Extensions shall return to a wall, guard, or the landing surface, or shall be continuous to the handrail of an adjacent stair flight.

SECTION 506
WINDOWS

506.1 General. Accessible windows shall have operable parts complying with Section 309.

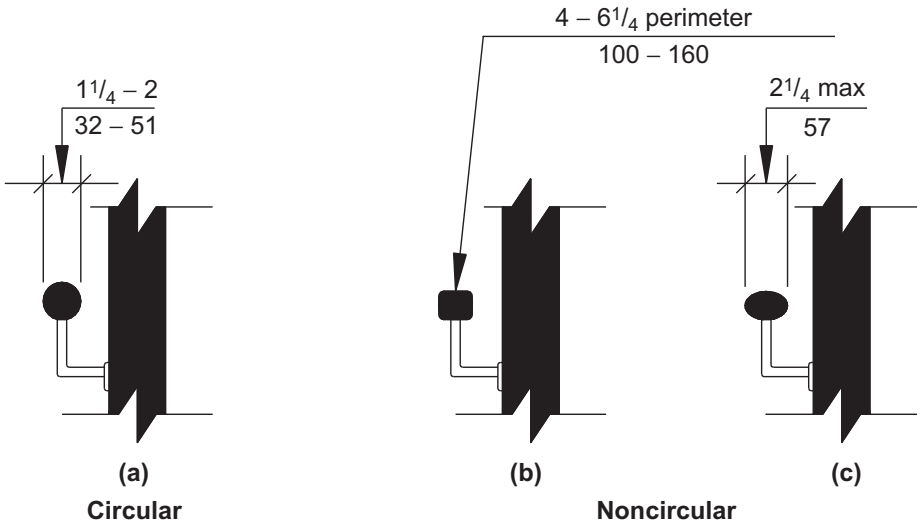

FIGURE 505.7
HANDRAIL CROSS SECTION

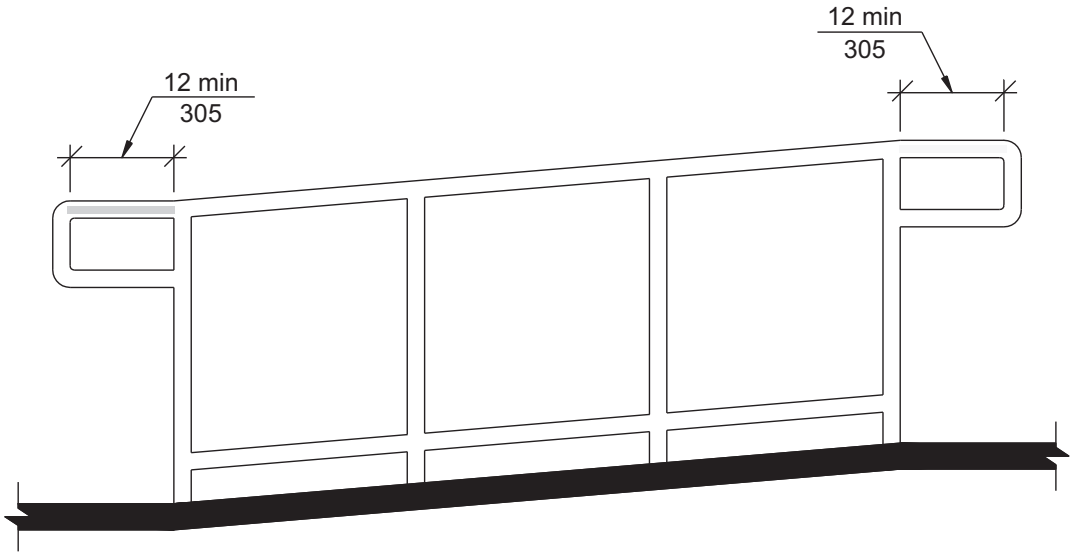

FIGURE 505.10.1
TOP AND BOTTOM HANDRAIL EXTENSIONS AT RAMPS

INTERNATIONAL CODE COUNCIL®
Copyright © 2014 ICC. ALL RIGHTS RESERVED. Accessed by William Munson on Jan 4, 2017 9:33:41 PM pursuant to License Agreement with ICC. No further reproduction or distribution authorized. ANY UNAUTHORIZED REPRODUCTION OR DISTRIBUTION IS A VIOLATION OF THE FEDERAL COPYRIGHT ACT AND THE LICENSE AGREEMENT, AND SUBJECT TO CIVIL AND CRIMINAL PENALTIES THEREUNDER.

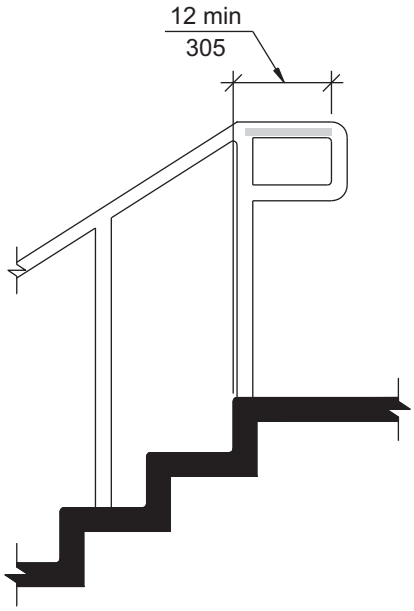

FIGURE 505.10.2
TOP HANDRAIL EXTENSIONS AT STAIRS

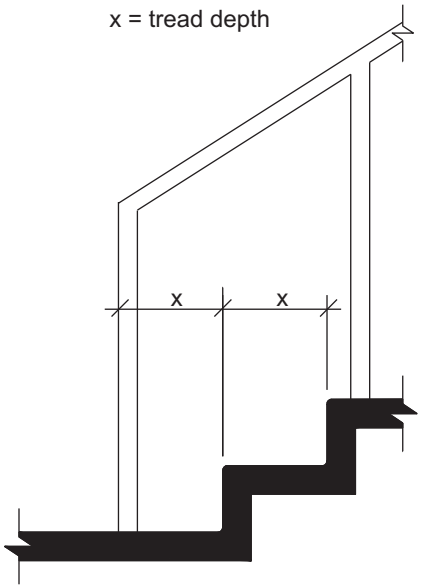

FIGURE 505.10.3
BOTTOM HANDRAIL EXTENSIONS AT STAIRS

INTERNATIONAL CODE COUNCIL®
Copyright © 2014 ICC. ALL RIGHTS RESERVED. Accessed by William Munson on Jan 4, 2017 9:33:41 PM pursuant to License Agreement with ICC. No further reproduction or distribution authorized. ANY UNAUTHORIZED REPRODUCTION OR DISTRIBUTION IS A VIOLATION OF THE FEDERAL COPYRIGHT ACT AND THE LICENSE AGREEMENT, AND SUBJECT TO CIVIL AND CRIMINAL PENALTIES THEREUNDER.

CHAPTER 6
PLUMBING ELEMENTS AND FACILITIES

SECTION 601
GENERAL

601.1 Scope. Plumbing elements and facilities required to be accessible by scoping provisions adopted by the administrative authority shall comply with the applicable provisions of Chapter 6.

SECTION 602
DRINKING FOUNTAINS

602.1 General. Accessible drinking fountains shall comply with Sections 602 and 307.

602.2 Clear floor space. A clear floor space complying with Section 305, positioned for a forward approach to the drinking fountain, shall be provided. Knee and toe space complying with Section 306 shall be provided. The clear floor space shall be centered on the drinking fountain.

Exceptions:

1. Drinking fountains for standing persons.
2. Drinking fountains primarily for children's use shall be permitted where the spout outlet is 30 inches (760 mm) maximum above the floor, a parallel approach complying with Section 305 is provided and the clear floor space is centered on the drinking fountain.

➡

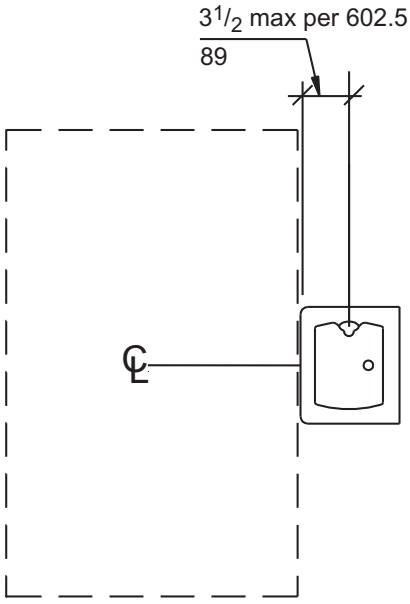

FIGURE 602.2
PARALLEL APPROACH AT DRINKING FOUNTAINS PRIMARILY FOR CHILDREN'S USE—(EXCEPTION 2)

602.3 Operable parts. Operable parts shall comply with Section 309.

602.4 Spout outlet height. Spout outlets of wheelchair accessible drinking fountains shall be 36 inches (915 mm) maximum above the floor. Spout outlets of drinking fountains for standing persons shall be 38 inches (965 mm) minimum and 43 inches (1090 mm) maximum above the floor.

602.5 Spout location. The spout shall be located 15 inches (380 mm) minimum from the vertical support and 5 inches (125 mm) maximum from the front edge of the drinking fountain, including bumpers. Where only a parallel approach is provided, the spout shall be located $3^1/_2$ inches (90 mm) maximum from the front edge of the drinking fountain, including bumpers.

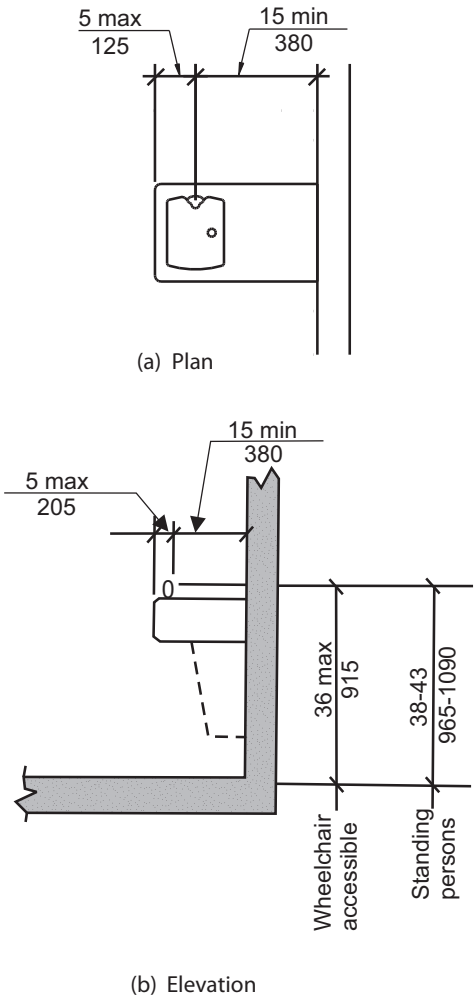

FIGURE 602.5
DRINKING FOUNTAIN SPOUT LOCATION

INTERNATIONAL CODE COUNCIL®
Copyright © 2014 ICC. ALL RIGHTS RESERVED. Accessed by William Munson on Jan 4, 2017 9:33:41 PM pursuant to License Agreement with ICC. No further reproduction or distribution authorized. ANY UNAUTHORIZED REPRODUCTION OR DISTRIBUTION IS A VIOLATION OF THE FEDERAL COPYRIGHT ACT AND THE LICENSE AGREEMENT, AND SUBJECT TO CIVIL AND CRIMINAL PENALTIES THEREUNDER.

602.6 Water flow. The spout shall provide a flow of water 4 inches (100 mm) minimum in height. The angle of the water stream from spouts within 3 inches (75 mm) of the front of the drinking fountain shall be 30 degrees maximum, and from spouts between 3 inches (75 mm) and 5 inches (125 mm) from the front of the drinking fountain shall be 15 degrees maximum, measured horizontally relative to the front face of the drinking fountain.

SECTION 603
TOILET AND BATHING ROOMS

603.1 General. Accessible toilet and bathing rooms shall comply with Section 603.

603.2 Clearances.

603.2.1 Turning space. A turning space complying with Section 304 shall be provided within the room. The required turning space shall not be provided within a toilet compartment.

603.2.2 Door swing. Doors shall not swing into the clear floor space or clearance for any fixture.

Exceptions:

1. Doors to a toilet or bathing room for a single occupant, accessed only through a private office and not for common use or public use shall be permitted to swing into the clear floor space, provided the swing of the door can be reversed to comply with Section 603.2.2.
2. Where the room is for individual use and a clear floor space complying with Section 305.3 is provided within the room beyond the arc of the door swing, the door shall not be required to comply with Section 603.2.2.

603.3 Mirrors. Where mirrors are located above lavatories, a mirror shall be located over the accessible lavatory and shall be mounted with the bottom edge of the reflecting surface 40 inches (1015 mm) maximum above the floor. Where mirrors are located above counters that do not contain lavatories, the mirror shall be mounted with the bottom edge of the reflecting surface 40 inches (1015 mm) maximum above the floor.

Exception: Other than within Accessible dwelling or sleeping units, mirrors are not required over the lavatories or counters if a mirror is located within the same toilet or bathing room and mounted with the bottom edge of the reflecting surface 35 inches (890 mm) maximum above the floor.

603.4 Coat Hooks and shelves. Coat hooks shall be located within one of the reach ranges specified in Section 308. Shelves shall be 40 inches (1015 mm) minimum and 48 inches (1220 mm) maximum above the floor.

603.5 Diaper changing tables. Diaper changing tables shall comply with Sections 309 and 902. Diaper changing tables shall not be located within toilet compartments.

603.6 Operable parts. Operable parts on towel dispensers and hand dryers serving accessible lavatories shall comply with Table 603.6.

SECTION 604
WATER CLOSETS AND TOILET COMPARTMENTS

604.1 General. Accessible water closets and toilet compartments shall comply with Section 604. Compartments containing more than one plumbing fixture shall comply with Section 603. Wheelchair accessible compartments shall comply with Section 604.9. Ambulatory accessible compartments shall comply with Section 604.10.

Exception: Water closets and toilet compartments primarily for children's use shall be permitted to comply with Section 604.11 as applicable.

604.2 Location. The water closet shall be located with a wall or partition to the rear and to one side. The centerline of the water closet shall be 16 inches (405 mm) minimum and 18 inches (455 mm) maximum from the side wall or partition. Water closets located in ambulatory accessible compartments specified in Section 604.10 shall have the centerline of the water closet 17 inches (430 mm) minimum and 19 inches (485 mm) maximum from the side wall or partition.

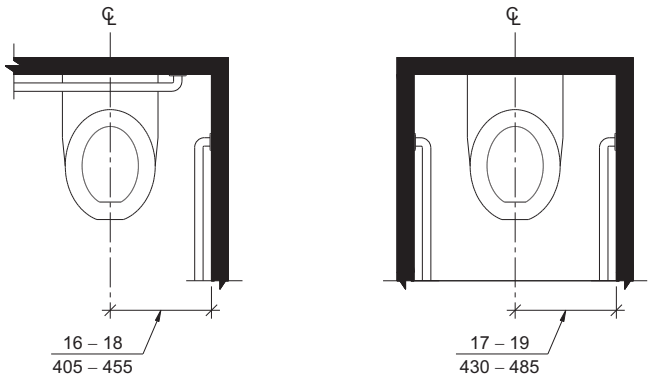

FIGURE 604.2
WATER CLOSET LOCATION

TABLE 603.6
MAXIMUM REACH DEPTH AND HEIGHT

Maximum Reach Depth	0.5 inch (13 mm)	2 inches (51 mm)	5 inches (125 mm)	6 inches (150 mm)	9 inches (230 mm)	11 inches (280 mm)
Maximum Reach Height	48 inches (1220 mm)	46 inches (1170 mm)	42 inches (1065 mm)	40 inches (1015 mm)	36 inches (915 mm)	34 inches (865 mm)

INTERNATIONAL CODE COUNCIL®
Copyright © 2014 ICC. ALL RIGHTS RESERVED. Accessed by William Munson on Jan 4, 2017 9:33:41 PM pursuant to License Agreement with ICC. No further reproduction or distribution authorized. ANY UNAUTHORIZED REPRODUCTION OR DISTRIBUTION IS A VIOLATION OF THE FEDERAL COPYRIGHT ACT AND THE LICENSE AGREEMENT, AND SUBJECT TO CIVIL AND CRIMINAL PENALTIES THEREUNDER.

604.3 Clearance.

604.3.1 Clearance width. Clearance around a water closet shall be 60 inches (1525 mm) minimum in width, measured perpendicular from the sidewall.

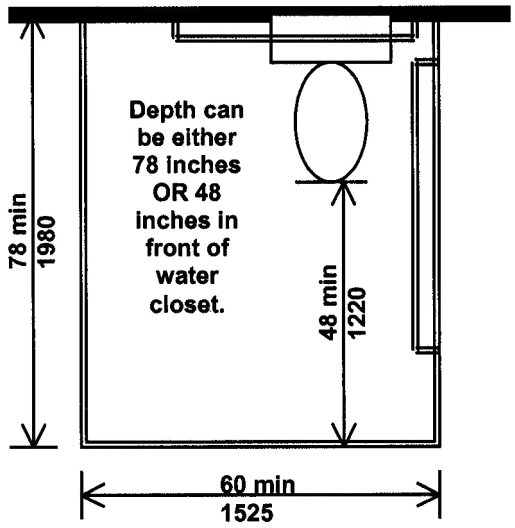

FIGURE 604.3
SIZE OF CLEARANCE FOR WATER CLOSET

604.3.2 Clearance depth. The depth of the clearance around the water closet shall be measured perpendicular from the rear wall and comply with Section 604.3.2.1 or 604.3.2.2.

604.3.2.1 Overall clearance. The overall clearance around the water closet shall be 78 inches (1980 mm) minimum in depth.

604.3.2.2 Water closet clearance. The depth of the clearance around the water closet shall be 48 inches (1220 mm) minimum plus the depth of the water closet fixture.

604.3.3 Clearance overlap. The required clearance around the water closet shall be permitted to overlap the water closet, associated grab bars, toilet paper and sanitary seat cover dispensers, sanitary napkin receptacles, coat hooks, a shelf measuring 6 inches (150 mm) maximum in depth by 12 inches (305 mm) maximum in width, accessible routes, clear floor space at other fixtures, and the turning space. No other fixtures or obstructions, including protruding towel dispensers or waste receptacles, shall be within the required water closet clearance.

Exception: A diaper changing table shall be permitted on the wall facing the front of the water closet in family or assisted-use toilet rooms and bathing rooms.

604.4 Height. The height of water closet seats shall be 17 inches (430 mm) minimum and 19 inches (485 mm) maximum above the floor, measured to the top of the seat. Seats shall not be sprung to return to a lifted position.

Exception: A water closet in a toilet room for a single occupant, accessed only through a private office and not for common use or public use, shall not be required to comply with Section 604.4.

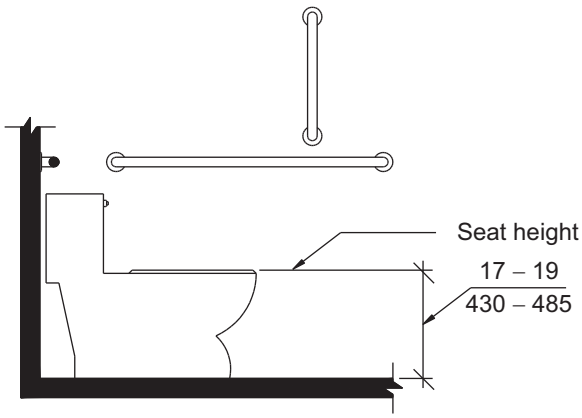

Note: For children's dimensions see Figure 604.11.4

FIGURE 604.4
WATER CLOSET SEAT HEIGHT

604.5 Grab bars. Grab bars for water closets shall comply with Section 609 and shall be provided in accordance with Sections 604.5.1 and 604.5.2. Grab bars shall be provided on the rear wall and on the side wall closest to the water closet.

Exceptions:

1. Grab bars are not required to be installed in a toilet room for a single occupant, accessed only through a private office and not for common use or public use, provided reinforcement has been installed in walls and located so as to permit the installation of grab bars complying with Section 604.5.
2. In detention or correction facilities, grab bars are not required to be installed in housing or holding cells or rooms that are specially designed without protrusions for purposes of suicide prevention.

604.5.1 Fixed side wall grab bars. Fixed side wall grab bars shall comply with Sections 604.5.1.1 and 604.5.1.2.

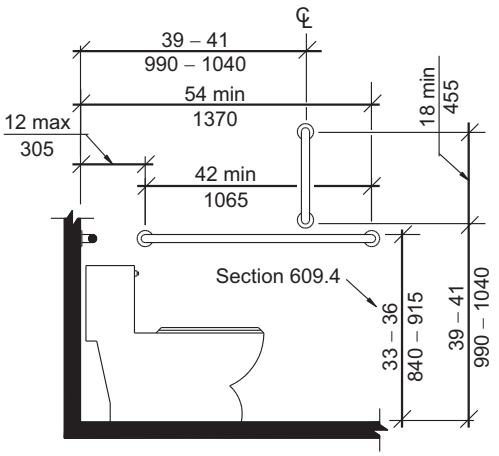

Note: For children's dimensions see Figure 609.4.2

FIGURE 604.5.1
SIDE WALL GRAB BAR FOR WATER CLOSET

INTERNATIONAL CODE COUNCIL®
Copyright © 2014 ICC. ALL RIGHTS RESERVED. Accessed by William Munson on Jan 4, 2017 9:33:41 PM pursuant to License Agreement with ICC. No further reproduction or distribution authorized. ANY UNAUTHORIZED REPRODUCTION OR DISTRIBUTION IS A VIOLATION OF THE FEDERAL COPYRIGHT ACT AND THE LICENSE AGREEMENT, AND SUBJECT TO CIVIL AND CRIMINAL PENALTIES THEREUNDER.

604.5.1.1 Horizontal fixed side wall grab bars. Horizontal fixed side wall grab bars shall be 42 inches (1065 mm) minimum in length, located 12 inches (305 mm) maximum from the rear wall and extending 54 inches (1370 mm) minimum from the rear wall.

604.5.1.2 Vertical fixed side wall grab bars. Vertical fixed side wall grab bars shall be 18 inches (455 mm) minimum in length and shall be mounted with the bottom of the bar located 39 inches (990 mm) minimum and 41 inches (1040 mm) maximum above the floor, with the centerline of the bar located 39 inches (990 mm) minimum and 41 inches (1040 mm) maximum from the rear wall.

604.5.1.2.1 Children's use vertical fixed side wall grab bars. Vertical fixed side wall grab bars primarily for children's use shall be 18 inches (455 mm) minimum in length and be mounted with the bottom of the bar located between 21 inches (535 mm) minimum and 30 inches (760 mm) maximum above the floor, with the centerline of the bar located between 34 inches (865 mm) minimum and 36 inches (915 mm) maximum from the rear wall.

604.5.2 Rear wall grab bars. The rear wall grab bar shall be 36 inches (915 mm) minimum in length, and extend from the centerline of the water closet 12 inches (305 mm) minimum on the side closest to the wall, and 24 inches (610 mm) minimum on the transfer side.

Exceptions:

1. The rear grab bar shall be permitted to be 24 inches (610 mm) minimum in length, centered on the water closet, where wall space does not permit a grab bar 36 inches (915 mm) minimum in length due to the location of a recessed fixture adjacent to the water closet.

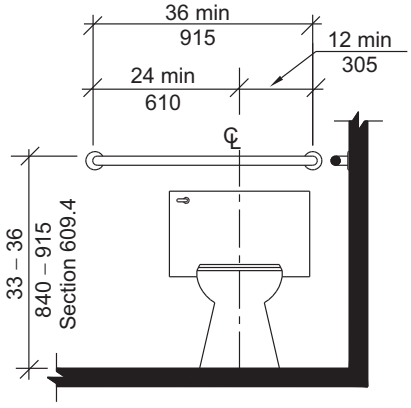

Note: For children's dimensions see Figure 609.4.2

FIGURE 604.5.2
REAR WALL GRAB BAR FOR WATER CLOSET

2. Where an administrative authority requires flush controls for flush valves to be located in a position that conflicts with the location of the rear grab bar, that grab bar shall be permitted to be split or shifted to the open side of the toilet area.

604.6 Flush controls. Flush controls shall be hand operated or automatic. Hand operated flush controls shall comply with Section 309. Flush controls shall be located on the open side of the water closet.

Exception: In ambulatory accessible compartments complying with Section 604.10, flush controls shall be permitted to be located on either side of the water closet.

604.7 Dispensers. Toilet paper dispensers shall comply with Section 309.4. Dispensers located above the grab bar shall be recessed and the outlet of the dispenser shall be located within an area 24 inches (610 mm) minimum and 36 inches (915 mm) maximum from the rear wall. Where the dispenser is located below the grab bar, the outlet of the dispenser shall be located within an area 24 inches (610 mm) minimum and 42 inches (1065 mm) maximum from the rear wall. The outlet of the dispenser shall be located 18 inches (455 mm) minimum and 48 inches (1220 mm) maximum above the floor. Dispensers shall comply with Section 609.3. Dispensers shall not be of the type that control delivery, or do not allow continuous paper flow.

604.8 Coat hooks and shelves. Coat hooks provided within toilet compartments shall be 48 inches (1220 mm) maximum above the floor. Shelves shall be 40 inches (1015 mm) minimum and 48 inches (1220 mm) maximum above the floor.

604.9 Wheelchair accessible compartments.

604.9.1 General. Wheelchair accessible compartments shall comply with Section 604.9.

604.9.2 Size. Toilet compartment clearance shall comply with Section 604.3.

604.9.2.1 Minimum area. Deleted.

604.9.2.2 Compartment for children's use. Deleted.

604.9.3 Doors. Toilet compartment doors, including door hardware, shall comply with Section 404 unless the approach to the compartment door is to the latch side of the compartment door, then the clearance between the door and any obstruction shall be 42 inches (1065 mm) minimum. The door shall be self-closing. A door pull complying with Section 404.2.6 shall be placed on both sides of the door near the latch. Toilet compartment doors shall not swing into the compartment unless a clear floor space complying with Section 305.3 is provided within the compartment, beyond the arc of the door swing.

604.9.3.1 Door opening location. The farthest edge of toilet compartment door opening shall be located in the front wall or partition or in the side wall or partition as required by Table 604.9.3.1.

604.9.4 Approach. Wheelchair accessible compartments shall be arranged for left-hand or right-hand approach to the water closet.

INTERNATIONAL CODE COUNCIL®
Copyright © 2014 ICC. ALL RIGHTS RESERVED. Accessed by William Munson on Jan 4, 2017 9:33:41 PM pursuant to License Agreement with ICC. No further reproduction or distribution authorized. ANY UNAUTHORIZED REPRODUCTION OR DISTRIBUTION IS A VIOLATION OF THE FEDERAL COPYRIGHT ACT AND THE LICENSE AGREEMENT, AND SUBJECT TO CIVIL AND CRIMINAL PENALTIES THEREUNDER.

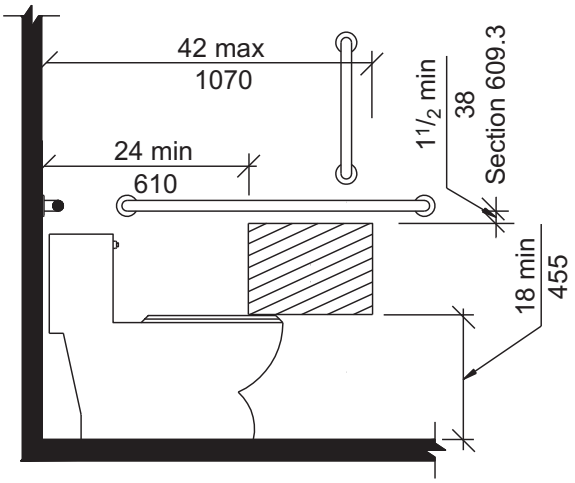

(a) Protruding Dispenser Below Grab Bar

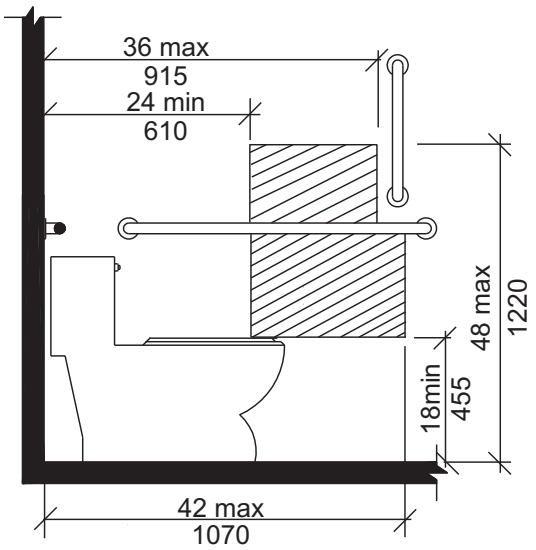

(c) Recessed Dispenser

Note: For children's dimensions see Fig. 604.11.7 dispenser outlet location

FIGURE 604.7
DISPENSER OUTLET LOCATION

INTERNATIONAL CODE COUNCIL®
Copyright © 2014 ICC. ALL RIGHTS RESERVED. Accessed by William Munson on Jan 4, 2017 9:33:41 PM pursuant to License Agreement with ICC. No further reproduction or distribution authorized. ANY UNAUTHORIZED REPRODUCTION OR DISTRIBUTION IS A VIOLATION OF THE FEDERAL COPYRIGHT ACT AND THE LICENSE AGREEMENT, AND SUBJECT TO CIVIL AND CRIMINAL PENALTIES THEREUNDER.

TABLE 604.9.3.1
DOOR OPENING LOCATION

DOOR OPENING LOCATION	MEASURED FROM	DIMENSION
Front Wall or Partition	From the side wall or partition closet to the water closet	56 inches (1420 mm) minimum
	or	
	From the side wall or partition farthest from the water closet	4 inches (100 mm) maximum
Side Wall or Partition Wall-Hung Water Closet	From the rear wall	52 inches (1320 mm) minimum
	or	
	From the front wall or partition	4 inches (100 mm) minimum
Side Wall or Partition Floor-Mounted Water Closet	From the rear wall	55 inches (1395 mm) minimum
	or	
	From the front wall or partition	4 inches (100 mm) maximum

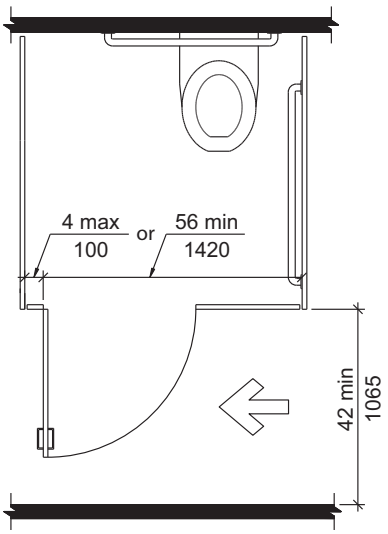

(a) Front partition

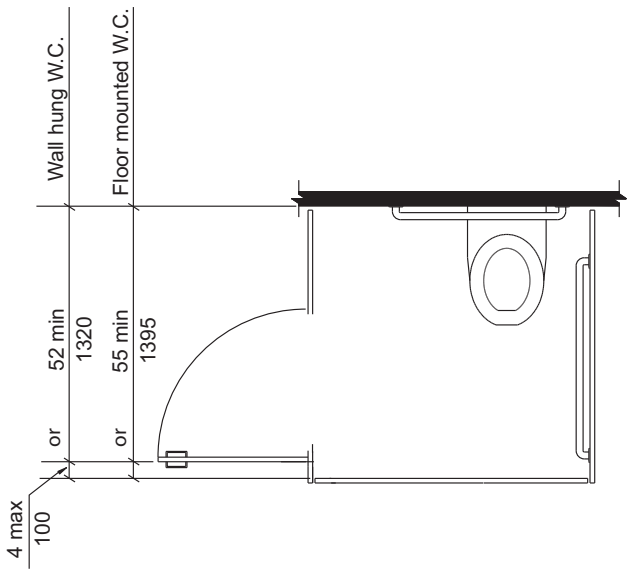

(b) Side wall or partition

FIGURE 604.9.3.1
WHEELCHAIR ACCESSIBLE COMPARTMENT DOOR OPENINGS

INTERNATIONAL CODE COUNCIL®
Copyright © 2014 ICC. ALL RIGHTS RESERVED. Accessed by William Munson on Jan 4, 2017 9:33:41 PM pursuant to License Agreement with ICC. No further reproduction or distribution authorized. ANY UNAUTHORIZED REPRODUCTION OR DISTRIBUTION IS A VIOLATION OF THE FEDERAL COPYRIGHT ACT AND THE LICENSE AGREEMENT, AND SUBJECT TO CIVIL AND CRIMINAL PENALTIES THEREUNDER.

604.9.5 Toe clearance. Toe clearance for compartments primarily for children's use shall comply with Section 604.9.5.2. Toe clearance for other wheelchair accessible compartments shall comply with Section 604.9.5.1.

604.9.5.1 Toe clearance at compartments. The front partition and at least one side partition shall provide a toe clearance of 9 inches (230 mm) minimum above the floor and extending 6 inches (150 mm) beyond the compartment side face of the partition, exclusive of partition support members.

Exceptions:

1. Toe clearance at the front partition is not required in a compartment greater than 62 inches (1575 mm) in depth with a wall-hung water closet, or greater than 65 inches (1650 mm) in depth with a floor-mounted water closet.
2. Toe clearance at the side partition is not required in a compartment greater than 66 inches (1675 mm) in width.

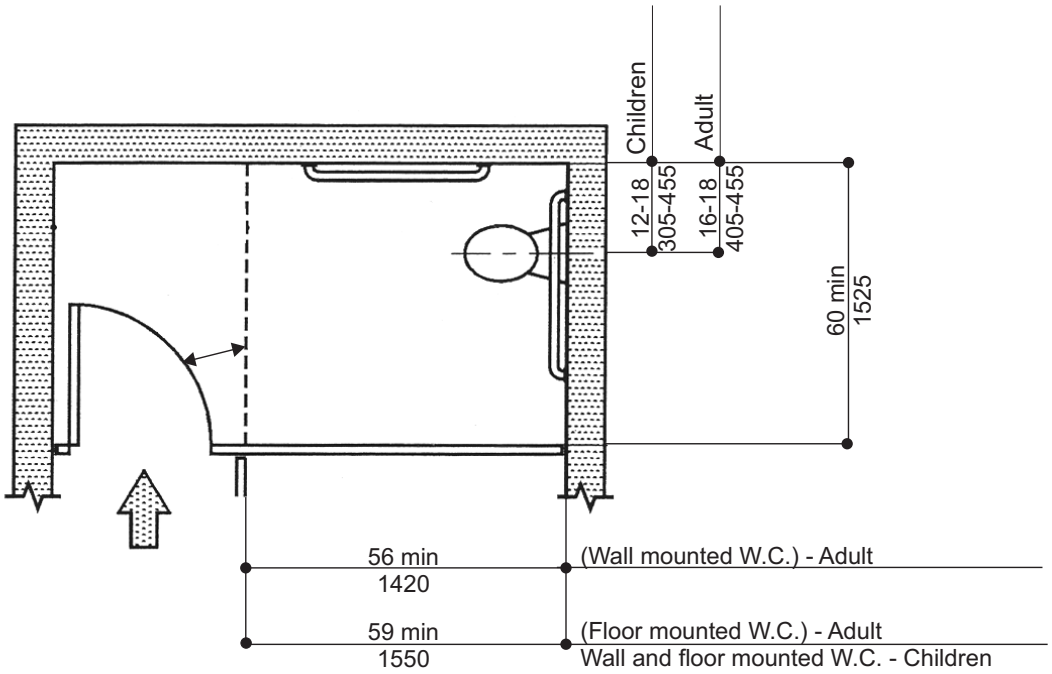

FIGURE 604.9.3.1(C)
WHEELCHAIR ACCESSIBLE COMPARTMENT DOOR OPENINGS—ALTERNATE

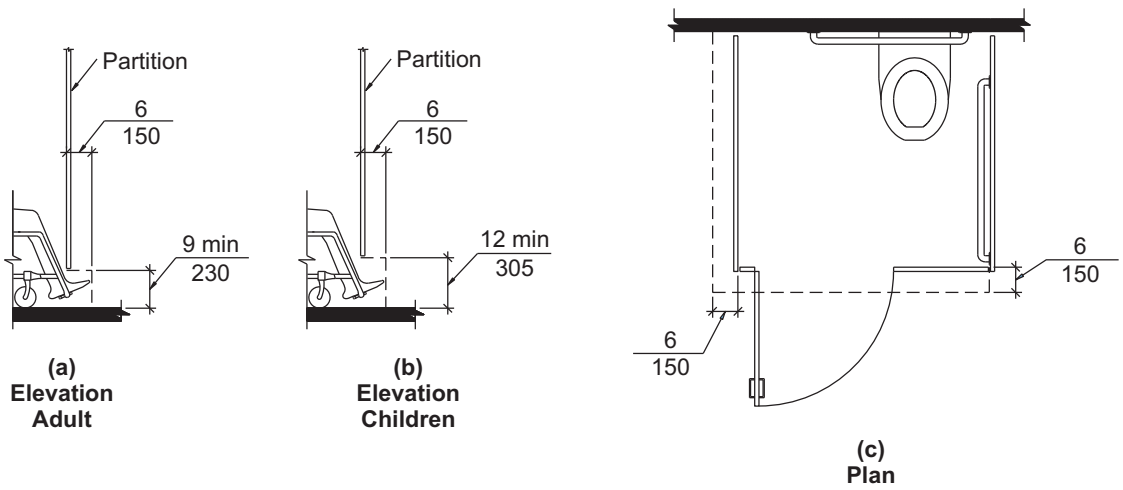

FIGURE 604.9.5
WHEELCHAIR ACCESSIBLE COMPARTMENT TOE CLEARANCE

INTERNATIONAL CODE COUNCIL®
Copyright © 2014 ICC. ALL RIGHTS RESERVED. Accessed by William Munson on Jan 4, 2017 9:33:41 PM pursuant to License Agreement with ICC. No further reproduction or distribution authorized. ANY UNAUTHORIZED REPRODUCTION OR DISTRIBUTION IS A VIOLATION OF THE FEDERAL COPYRIGHT ACT AND THE LICENSE AGREEMENT, AND SUBJECT TO CIVIL AND CRIMINAL PENALTIES THEREUNDER.

604.9.5.2 Toe clearance at compartments for children's use. The front partition and at least one side partition of compartments primarily for children's use shall provide a toe clearance of 12 inches (305 mm) minimum above the floor and extending 6 inches (150 mm) beyond the compartment side face of the partition, exclusive of partition support members.

Exceptions:

1. Toe clearance at the front partition is not required in a compartment greater than 65 inches (1650 mm) in depth.
2. Toe clearance at the side partition is not required in a compartment greater than 66 inches (1675 mm) in width.

604.9.6 Grab Bars. Grab bars shall comply with Section 609. Side wall grab bars complying with Section 604.5.1 located on the wall closest to the water closet, and a rear wall grab bar complying with Section 604.5.2, shall be provided.

604.10 Ambulatory accessible compartments.

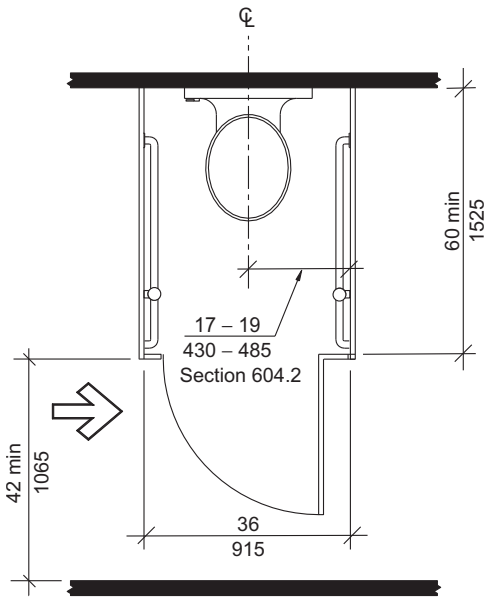

FIGURE 604.10
AMBULATORY ACCESSIBLE COMPARTMENT

604.10.1 General. Ambulatory accessible compartments shall comply with Section 604.10.

604.10.2 Size. The minimum area of an ambulatory accessible compartment shall be 60 inches (1525 mm) minimum in depth and 36 inches (915 mm) in width.

604.10.3 Doors. Toilet compartment doors, including door hardware, shall comply with Section 404, except if the approach is to the latch side of the compartment door the clearance between the door side of the compartment and any obstruction shall be 42 inches (1065 mm) minimum. The door shall be self-closing. A door pull complying with Section 404.2.6 shall be placed on both sides of the door near the latch. Compartment doors shall not swing into the required minimum area of the compartment.

Exception: Door maneuvering clearance complying with Section 404.2.3.2 shall not be required on the compartment side of the door.

MNMNMN

604.10.4 Grab bars. Grab bars shall comply with Section 609. Side wall grab bars complying with Section 604.5.1 shall be provided on both sides of the compartment.

604.11 Water closets and toilet compartments for children's use.

604.11.1 General. Accessible water closets and toilet compartments primarily for children's use shall comply with Section 604.11.

604.11.2 Location. The water closet primarily for children's use shall be located with a wall or partition to the rear and to one side. The centerline of the water closet shall be 12 inches (305 mm) minimum and 18 inches (455 mm) maximum from the side wall or partition. Water closets located in ambulatory accessible toilet compartments specified in Section 604.10 shall be located as specified in Section 604.2.

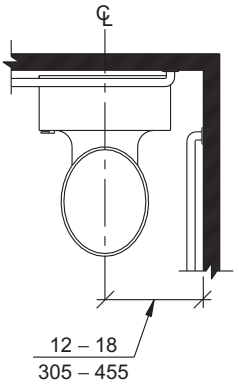

FIGURE 604.11.2
CHILDREN'S WATER CLOSET LOCATION

604.11.3 Clearance. A clearance around the water closet primarily for children's use complying with Section 604.3 shall be provided.

604.11.4 Height. The height of water closet seats primarily for children's use shall be 11 inches (280 mm) minimum and 17 inches (430 mm) maximum above the floor, measured to the top of the seat. Seats shall not be sprung to return to a lifted position.

604.11.5 Grab bars. Grab bars for water closets primarily for children's use shall comply with Section 604.5.

604.11.6 Flush controls. Flush controls primarily for children's use shall be hand operated or automatic. Hand operated flush controls shall comply with Sections 309.2 and 309.4 and shall be installed 36 inches (915 mm) maximum above the floor. Flush controls shall be located on the open side of the water closet.

Exception: In ambulatory accessible compartments complying with Section 604.10, flush controls shall be permitted to be located on either side of the water closet.

INTERNATIONAL CODE COUNCIL®
Copyright © 2014 ICC. ALL RIGHTS RESERVED. Accessed by William Munson on Jan 4, 2017 9:33:41 PM pursuant to License Agreement with ICC. No further reproduction or distribution authorized. ANY UNAUTHORIZED REPRODUCTION OR DISTRIBUTION IS A VIOLATION OF THE FEDERAL COPYRIGHT ACT AND THE LICENSE AGREEMENT, AND SUBJECT TO CIVIL AND CRIMINAL PENALTIES THEREUNDER.

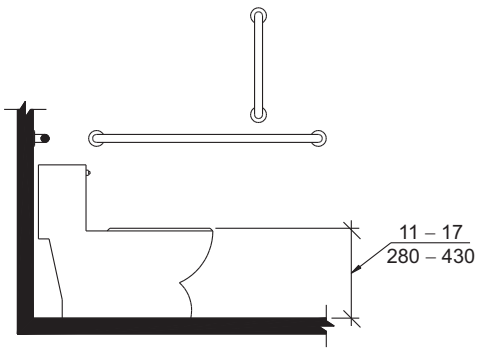

Note: For adult dimensions see Figure 604.4

FIGURE 604.11.4
CHILDREN'S WATER CLOSET HEIGHT

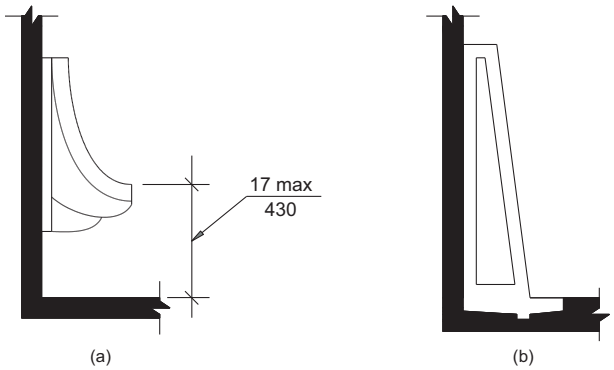

FIGURE 605.2
HEIGHT OF URINALS

604.11.7 Dispensers. Toilet paper dispensers primarily for children's use shall comply with Section 309.4. The outlet of dispensers shall be located within an area 24 inches (610 mm) minimum and 42 inches (1065 mm) maximum from the rear wall. The outlet of the dispenser shall be 14 inches (355 mm) minimum and 19 inches (485 mm) maximum above the floor. There shall be a clearance of $1^1/_2$ inches (38 mm) minimum below the grab bar. Dispensers shall not be of a type that control delivery or do not allow continuous paper flow.

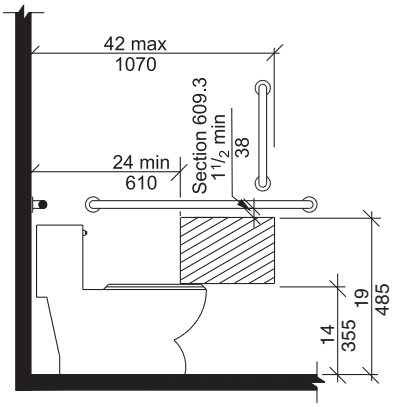

Note: For adult dimensions see Figure 604.7

FIGURE 604.11.7
CHILDREN'S DISPENSER OUTLET LOCATION

604.11.8 Toilet compartments. Toilet compartments primarily for children's use shall comply with Sections 604.9 and 604.10, as applicable.

SECTION 605
URINALS

605.1 General. Accessible urinals shall comply with Section 605.

605.2 Height and depth. Urinals shall be of the stall type or shall be of the wall hung type with the rim at 17 inches (430 mm) maximum above the floor. Wall hung urinals shall be $13^1/_2$ inches (345 mm) minimum in depth measured from the outer face of the urinal rim to the wall.

605.3 Clear floor space. A clear floor space complying with Section 305, positioned for forward approach, shall be provided.

605.4 Flush controls. Flush controls shall be hand operated or automatic. Hand operated flush controls shall comply with Section 309.

SECTION 606
LAVATORIES AND SINKS

606.1 General. Accessible lavatories and sinks shall comply with Section 606.

606.2 Clear floor space. A clear floor space complying with Section 305.3, positioned for forward approach, shall be provided. Knee and toe clearance complying with Section 306 shall be provided. The dip of the overflow shall not be considered in determining knee and toe clearances.

Exceptions:

1. A parallel approach complying with Section 305 and centered on the sink, shall be permitted to a kitchen sink in a space where a cook top or conventional range is not provided.
2. The requirement for knee and toe clearance shall not apply to a lavatory in a toilet or bathing facility for a single occupant, accessed only through a private office and not for common use or public use.
3. A knee clearance of 24 inches (610 mm) minimum above the floor shall be permitted at lavatories and sinks used primarily by children ages 6 through 12 where the rim or counter surface is 31 inches (785 mm) maximum above the floor.
4. A parallel approach complying with Section 305 and centered on the sink, shall be permitted at lavatories and sinks used primarily by children ages 5 and younger.
5. The requirement for knee and toe clearance shall not apply to more than one bowl of a multibowl sink.
6. A parallel approach complying with Section 305 and centered on the sink, shall be permitted at wet bars.
7. A parallel approach complying with Section 305 shall be permitted to a service sink requiring a deep bowl. MNMN

INTERNATIONAL CODE COUNCIL®
Copyright © 2014 ICC. ALL RIGHTS RESERVED. Accessed by William Munson on Jan 4, 2017 9:33:41 PM pursuant to License Agreement with ICC. No further reproduction or distribution authorized. ANY UNAUTHORIZED REPRODUCTION OR DISTRIBUTION IS A VIOLATION OF THE FEDERAL COPYRIGHT ACT AND THE LICENSE AGREEMENT, AND SUBJECT TO CIVIL AND CRIMINAL PENALTIES THEREUNDER.

606.3 Height. The front of lavatories and sinks shall be 34 inches (865 mm) maximum above the floor, measured to the higher of the rim or counter surface.

Exception: A lavatory in a toilet or bathing facility for a single occupant, accessed only through a private office and not for common use or public use, shall not be required to comply with Section 606.3.

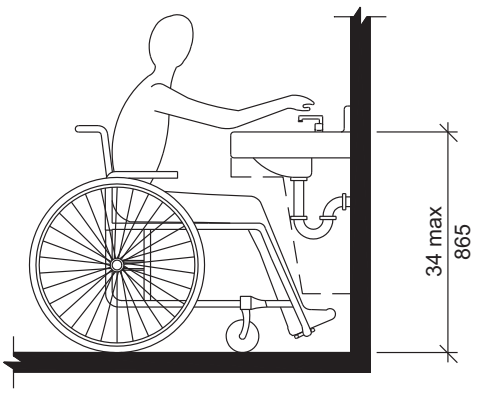

FIGURE 606.3
HEIGHT OF LAVATORIES AND SINKS

606.4 Faucets. Faucets shall comply with Section 309. Hand-operated metering faucets shall remain open for 10 seconds minimum.

606.5 Lavatories with enhanced reach range. Where enhanced reach range is required at lavatories, faucets and soap dispenser controls shall have a reach depth of 11 inches (280 mm) maximum or, if automatic, shall be activated within a reach depth of 11 inches (280 mm) maximum. Water and soap flow shall be provided with a reach depth of 11 inches (280 mm) maximum.

606.6 Exposed pipes and surfaces. Water supply and drain pipes under lavatories and sinks shall be insulated or otherwise configured to protect against contact. There shall be no sharp or abrasive surfaces under lavatories and sinks.

SECTION 607
BATHTUBS

607.1 General. Accessible bathtubs shall comply with Section 607.

607.2 Clearance. A clearance in front of bathtubs extending the length of the bathtub and 30 inches (760 mm) minimum in depth shall be provided. Where a permanent seat is provided at the head end of the bathtub, the clearance shall extend 12 inches (305 mm) minimum beyond the wall at the head end of the bathtub.

607.3 Seat. A permanent seat at the head end of the bathtub or a removable in-tub seat shall be provided. Seats shall comply with Section 610.

607.4 Grab bars. Grab bars shall comply with Section 609 and shall be provided in accordance with Section 607.4.1 or 607.4.2.

Exception: Grab bars shall not be required to be installed in a bathing facility for a single occupant accessed only through a private office and not for common use or public use, provided reinforcement has been installed in walls and located so as to permit the installation of grab bars complying with Section 607.4.

607.4.1 Bathtubs with permanent seats. For bathtubs with permanent seats, grab bars complying with Section 607.4.1 shall be provided.

607.4.1.1 Back wall. Two horizontal grab bars shall be provided on the back wall, one complying with Section 609.4 and the other located 8 inches (205 mm) minimum and 10 inches (255 mm) maximum above the rim of the bathtub. Each grab bar shall be located 15 inches (380 mm) maximum from the head end wall and extend to 12 inches (305 mm) maximum from the control end wall.

607.4.1.2 control end wall. Control end wall grab bars shall comply with Section 607.4.1.2.

Exception: An L-shaped continuous grab bar of equivalent dimensions and positioning shall be permitted to serve the function of separate vertical and horizontal grab bars.

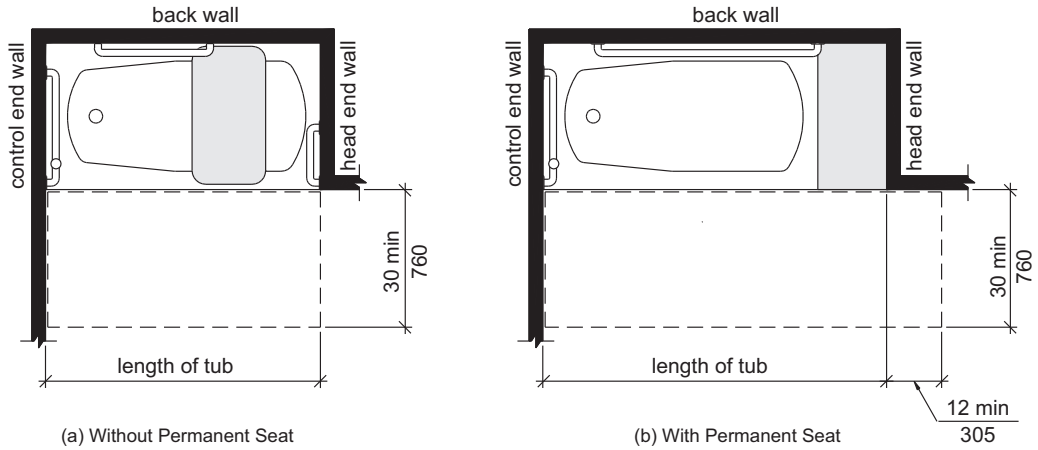

FIGURE 607.2
CLEARANCE FOR BATHTUBS

INTERNATIONAL CODE COUNCIL®
Copyright © 2014 ICC. ALL RIGHTS RESERVED. Accessed by William Munson on Jan 4, 2017 9:33:41 PM pursuant to License Agreement with ICC. No further reproduction or distribution authorized. ANY UNAUTHORIZED REPRODUCTION OR DISTRIBUTION IS A VIOLATION OF THE FEDERAL COPYRIGHT ACT AND THE LICENSE AGREEMENT, AND SUBJECT TO CIVIL AND CRIMINAL PENALTIES THEREUNDER.

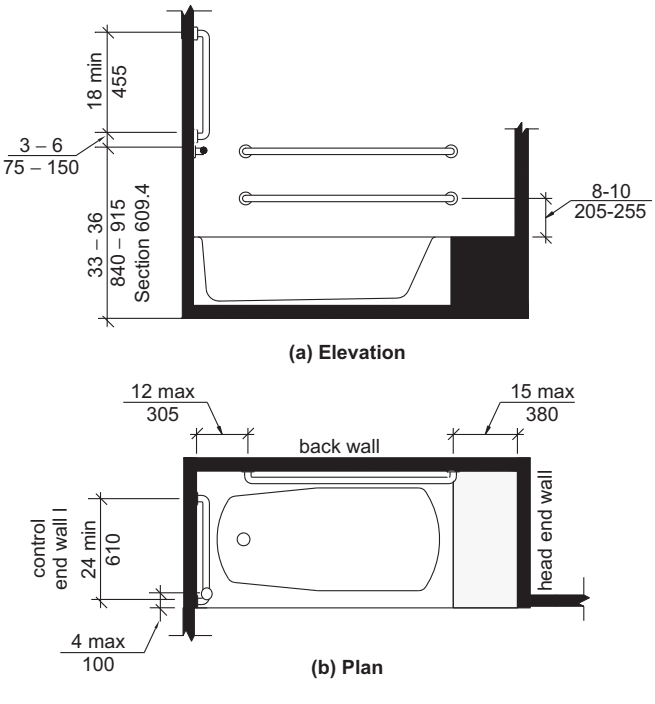

FIGURE 607.4.1
GRAB BARS FOR BATHTUBS WITH PERMANENT SEATS

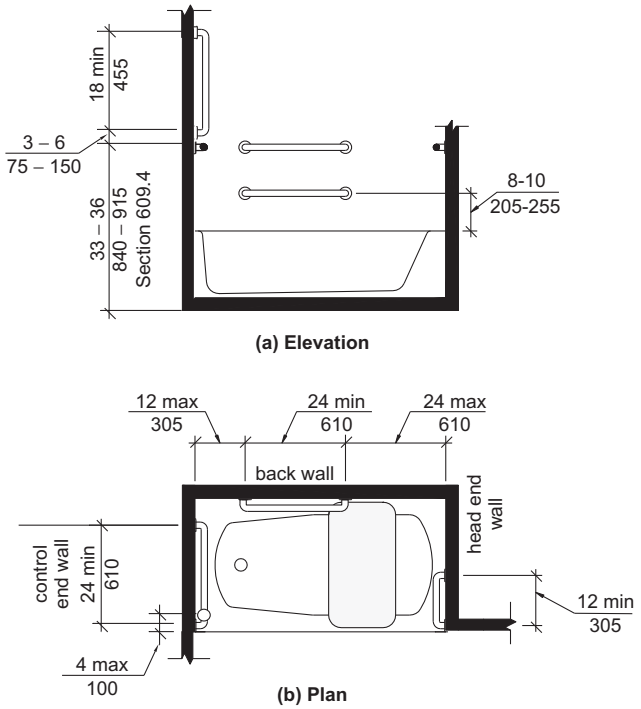

FIGURE 607.4.2
GRAB BARS FOR BATHTUBS WITHOUT PERMANENT SEATS

607.4.1.2.1 Horizontal grab bar. A horizontal grab bar 24 inches (610 mm) minimum in length shall be provided on the control end wall beginning near the front edge of the bathtub and extending toward the inside corner of the bathtub.

607.4.1.2.2 Vertical grab bar. A vertical grab bar 18 inches (455 mm) minimum in length shall be provided on the control end wall 3 inches (75 mm) minimum and 6 inches (150 mm) maximum above the horizontal grab bar, and 4 inches (100 mm) maximum inward from the front edge of the bathtub.

607.4.2 Bathtubs without permanent seats. For bathtubs without permanent seats, grab bars complying with Section 607.4.2 shall be provided.

607.4.2.1 Back wall. Two horizontal grab bars shall be provided on the back wall, one complying with Section 609.4 and the other located 8 inches (205 mm) minimum and 10 inches (255 mm) maximum above the rim of the bathtub. Each grab bar shall be 24 inches (610 mm) minimum in length, located 24 inches (610 mm) maximum from the head end wall and extend to 12 inches (305 mm) maximum from the control end wall.

607.4.2.2 Control end wall. Control end wall grab bars shall comply with Section 607.4.1.2.

607.4.2.3 Head end wall. A horizontal grab bar 12 inches (305 mm) minimum in length shall be provided on the head end wall at the front edge of the bathtub.

607.5 Controls. Controls, other than drain stoppers, shall be provided on an end wall, located between the bathtub rim and grab bar, and between the open side of the bathtub and the centerline of the width of the bathtub. Controls shall comply with Section 309.4.

607.6 Hand shower. A hand shower with a hose 59 inches (1500 mm) minimum in length, that can be used as both a fixed shower head and as a hand shower, shall be provided. The hand shower shall have a control with a nonpositive shut-off feature. Where provided, an adjustable-height hand shower mounted on a vertical bar shall be installed so as to not obstruct the use of grab bars.

607.7 Bathtub enclosures. Enclosures for bathtubs shall not obstruct controls, faucets, shower and spray units or obstruct transfer from wheelchairs onto bathtub seats or into bathtubs. Enclosures on bathtubs shall not have tracks installed on the rim of the bathtub.

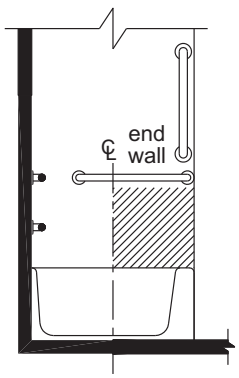

FIGURE 607.5
LOCATION OF BATHTUB CONTROLS

INTERNATIONAL CODE COUNCIL®
Copyright © 2014 ICC. ALL RIGHTS RESERVED. Accessed by William Munson on Jan 4, 2017 9:33:41 PM pursuant to License Agreement with ICC. No further reproduction or distribution authorized. ANY UNAUTHORIZED REPRODUCTION OR DISTRIBUTION IS A VIOLATION OF THE FEDERAL COPYRIGHT ACT AND THE LICENSE AGREEMENT, AND SUBJECT TO CIVIL AND CRIMINAL PENALTIES THEREUNDER.

607.8 Water temperature. Bathtubs shall deliver water that is 120°F (49°C) maximum.

SECTION 608
SHOWER COMPARTMENTS

608.1 General. Accessible shower compartments shall comply with Section 608.

608.2 Size, clearance and seat. Shower compartments shall have sizes, clearances and seats complying with Section 608.2.

608.2.1 Transfer-type shower compartments. Transfer-type shower compartments shall comply with Section 608.2.1.

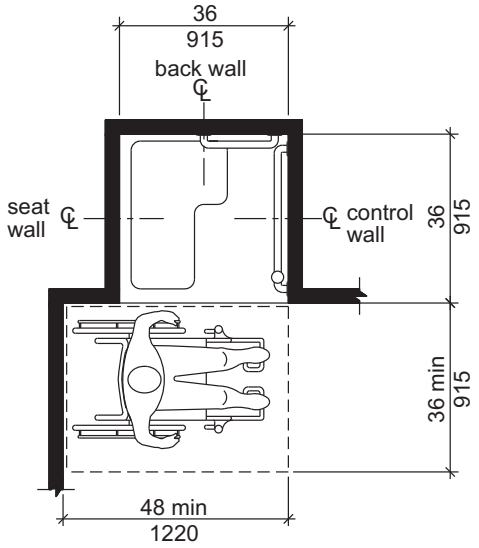

Note: inside finished dimensions measured at the center points of opposing sides

FIGURE 608.2.1
TRANSFER-TYPE SHOWER COMPARTMENT SIZE AND CLEARANCE

608.2.1.1 Size. Transfer-type shower compartments shall have a clear inside dimension of 36 inches (915 mm) in width and 36 inches (915 mm) in depth, measured at the center point of opposing sides. An entry 36 inches (915 mm) minimum in width shall be provided.

608.2.1.2 Clearance. A clearance of 48 inches (1220 mm) minimum in length measured perpendicular from the control wall, and 36 inches (915 mm) minimum in depth shall be provided adjacent to the open face of the compartment.

608.2.1.3 Seat. A folding or non-folding seat complying with Section 610 shall be provided on the wall opposite the control wall.

Exception: A seat is not required to be installed in a shower for a single occupant, accessed only through a private office and not for common use or public use, provided reinforcement has been installed in walls and located so as to permit the installation of a shower seat.

608.2.2 Standard roll-in-type shower compartments. Standard roll-in-type shower compartments shall comply with Section 608.2.2.

608.2.2.1 Size. Standard roll-in-type shower compartments shall have a clear inside dimension of 60 inches (1525 mm) minimum in width and 30 inches (760 mm) minimum in depth, measured at the center point of opposing sides. An entry 60 inches (1525 mm) minimum in width shall be provided.

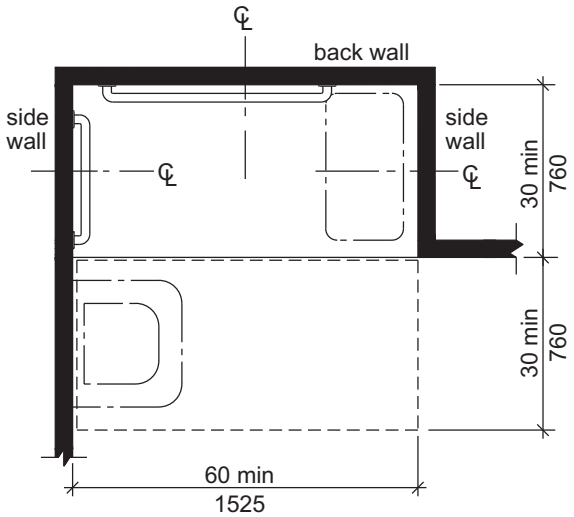

Note: inside finished dimensions measured at the center points of opposing sides

FIGURE 608.2.2
STANDARD ROLL-IN-TYPE SHOWER COMPARTMENT SIZE AND CLEARANCE

608.2.2.2 Clearance. A clearance of 60 inches (1525 mm) minimum in length adjacent to the 60-inch (1525 mm) width of the open face of the shower compartment, and 30 inches (760 mm) minimum in depth, shall be provided.

Exception: A lavatory complying with Section 606 shall be permitted at the end of the clearance opposite the seat.

608.2.2.3 Seat. A folding seat complying with Section 610 shall be provided on an end wall.

Exceptions:

1. A seat is not required to be installed in a shower for a single occupant accessed only through a private office and not for common use or public use, provided reinforcement has been installed in walls and located so as to permit the installation of a shower seat.
2. A fixed seat shall be permitted where the seat does not overlap the minimum clear inside dimension required by Section 608.2.2.1.

608.2.3 Alternate roll-in-type shower compartments. Alternate roll-in-type shower compartments shall comply with Section 608.2.3.

INTERNATIONAL CODE COUNCIL®
Copyright © 2014 ICC. ALL RIGHTS RESERVED. Accessed by William Munson on Jan 4, 2017 9:33:41 PM pursuant to License Agreement with ICC. No further reproduction or distribution authorized. ANY UNAUTHORIZED REPRODUCTION OR DISTRIBUTION IS A VIOLATION OF THE FEDERAL COPYRIGHT ACT AND THE LICENSE AGREEMENT, AND SUBJECT TO CIVIL AND CRIMINAL PENALTIES THEREUNDER.

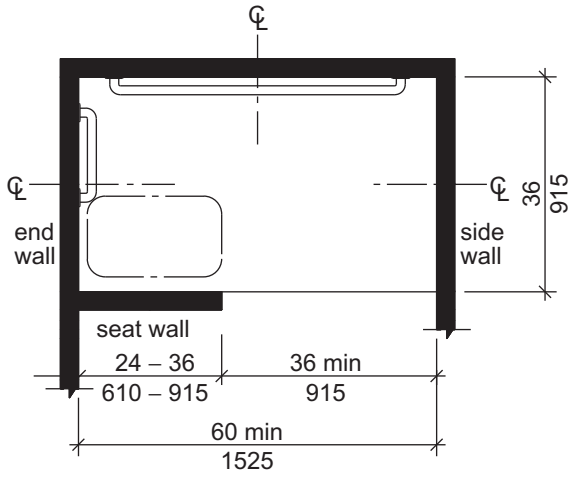

Note: inside finished dimensions measured at the center points of opposing sides

FIGURE 608.2.3
ALTERNATE ROLL-IN-TYPE SHOWER COMPARTMENT SIZE AND CLEARANCE

608.2.3.1 Size. Alternate roll-in shower compartments shall have a clear inside dimension of 60 inches (1525 mm) minimum in width, and 36 inches (915 mm) in depth, measured at the center point of opposing sides. An entry 36 inches (915) mm) minimum in width shall be provided at one end of the 60-inch (1525 mm) width of the compartment. A seat wall, 24 inches (610 mm) minimum and 36 inches (915 mm) maximum in length, shall be provided on the entry side of the compartment.

608.2.3.2 Seat. A folding seat complying with Section 610 shall be provided on the seat wall opposite the back wall.

Exception: A seat is not required to be installed in a shower for a single occupant, accessed only through a private office and not for common use or public use, provided reinforcement has been installed in walls and located so as to permit the installation of a shower seat.

608.3 Grab bars. Grab bars shall comply with Section 609 and shall be provided in accordance with Section 608.3. Where multiple grab bars are used, required horizontal grab bars shall be installed at the same height above the floor.

Exception: Grab bars are not required to be installed in a shower for a single occupant, accessed only through a private office and not for common use or public use, provided reinforcement has been installed in walls and located so as to permit the installation of grab bars complying with Section 608.3.

608.3.1 Transfer-type showers. Grab bars for transfer type showers shall comply with Section 608.3.1.

608.3.1.1 Horizontal grab bars. Horizontal grab bars shall be provided across the control wall and on the back wall to a point 18 inches (455 mm) from the control wall.

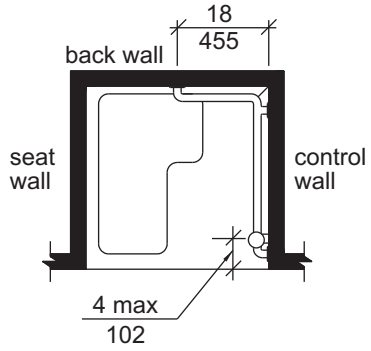

FIGURE 608.3.1
GRAB BARS IN TRANSFER-TYPE SHOWERS

608.3.1.2 Vertical grab bar. A vertical grab bar 18 inches (455 mm) minimum in length shall be provided on the control end wall 3 inches (75 mm) minimum and 6 inches (150 mm) maximum above the horizontal grab bar, and 4 inches (100 mm) maximum inward from the front edge of the shower.

608.3.2 Standard roll-in-type showers. In standard roll-in type showers, a grab bar shall be provided on the back wall beginning at the edge of the seat. The grab bars shall not be provided above the seat. The back wall grab bar shall extend the length of the wall but shall not be required to exceed 48 inches (1220 mm) in length. Where a side wall is provided opposite the seat within 72 inches (1830 mm) of the seat wall, a grab bar shall be provided on the side wall opposite the seat. The side wall grab bar shall extend the length of the wall but shall not be required to exceed 30 inches (760 mm) in length. Grab bars shall be 6 inches (150 mm) maximum from the adjacent wall.

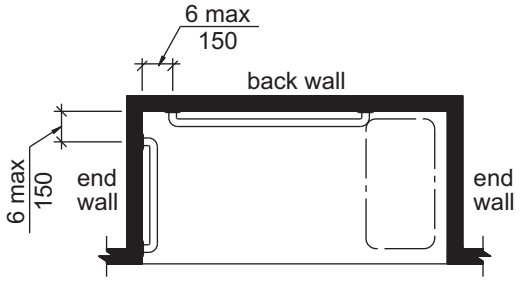

With Seat

FIGURE 608.3.2
GRAB BARS IN STANDARD ROLL-IN-TYPE SHOWERS

608.3.3 Alternate roll-in-type showers. In alternate roll-in type showers, grab bars shall be provided on the back wall and the end wall adjacent to the seat. Grab bars shall not be provided above the seat. Grab bars shall be 6 inches (150 mm) maximum from the adjacent wall.

INTERNATIONAL CODE COUNCIL®
Copyright © 2014 ICC. ALL RIGHTS RESERVED. Accessed by William Munson on Jan 4, 2017 9:33:41 PM pursuant to License Agreement with ICC. No further reproduction or distribution authorized. ANY UNAUTHORIZED REPRODUCTION OR DISTRIBUTION IS A VIOLATION OF THE FEDERAL COPYRIGHT ACT AND THE LICENSE AGREEMENT, AND SUBJECT TO CIVIL AND CRIMINAL PENALTIES THEREUNDER.

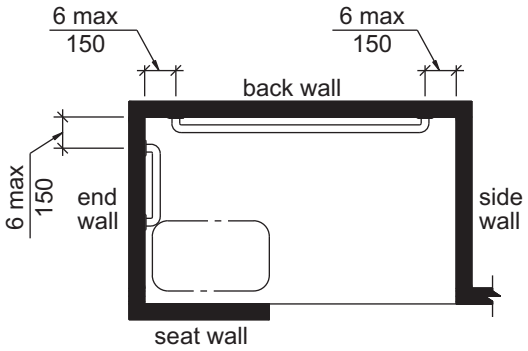

FIGURE 608.3.3
GRAB BARS IN ALTERNATE ROLL-IN-TYPE SHOWERS

608.4 Controls and hand showers. Controls and hand showers shall comply with Sections 608.4 and 309.4.

608.4.1 Transfer-type showers. In transfer-type showers, the controls and hand shower shall be located:

1. On the control wall opposite the seat.
2. At a height of 38 inches (965 mm) minimum and 48 inches (1220 mm) maximum above the shower floor, and
3. 15 inches (380 mm) maximum, from the centerline of the control wall toward the shower opening.

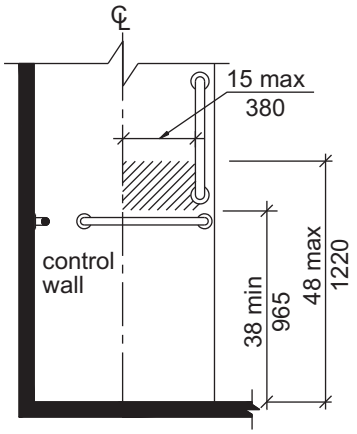

FIGURE 608.4.1
TRANSFER-TYPE SHOWER
CONTROLS AND HANDSHOWER LOCATION

608.4.2 Standard roll-in showers. In standard roll-in showers, the controls and hand shower shall be located on the back wall above the grab bar, 48 inches (1220 mm) maximum above the shower floor and 16 inches (405 mm) minimum and 27 inches (685 mm) maximum from the end wall behind the seat.

608.4.3 Alternate roll-in showers. In alternate roll-in showers, the controls and hand shower shall be located 38 inches (965 mm) minimum and 48 inches (1220 mm) maximum above the shower floor. In alternate roll-in showers with controls and hand shower located on the end wall adjacent to the seat, the controls and hand shower shall be 27 inches (685 mm) maximum from the seat wall. In alternate roll-in showers with the controls and hand shower located on the back wall opposite the seat, the controls and hand shower shall be located within 15 inches (380 mm), left or right, of the centerline of the seat.

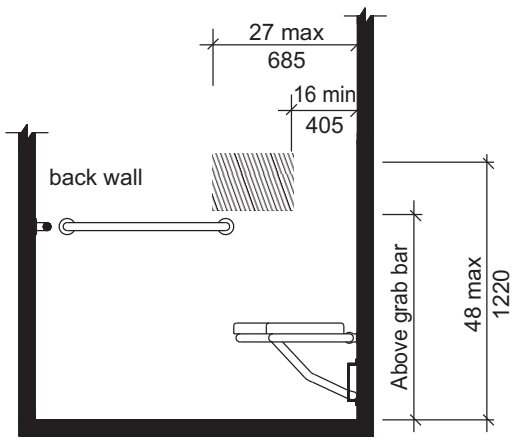

With Seat

FIGURE 608.4.2
STANDARD ROLL-IN-TYPE SHOWER
CONTROL AND HANDSHOWER LOCATION

608.5 Hand showers. A hand shower with a hose 59 inches (1500 mm) minimum in length, that can be used both as a fixed shower head and as a hand shower, shall be provided. The hand shower shall have a control with a nonpositive shut-off feature. Where provided, an adjustable-height hand shower mounted on a vertical bar shall be installed so as to not obstruct the use of grab bars.

Exception: A fixed shower head located 48 inches (1220 mm) maximum above the shower floor shall be permitted in lieu of a hand shower when approved by the administrative authority due to concerns for security or safety.

608.6 Thresholds. Thresholds in roll-in-type shower compartments shall be $^1/_2$ inch (13 mm) maximum in height in accordance with Section 303. In transfer-type shower compartments, thresholds $^1/_2$ inch (13 mm) maximum in height shall be beveled, rounded, or vertical.

Exception: In existing facilities, in transfer-type shower compartments where provision of a threshold $^1/_2$ inch (13 mm) in height would disturb the structural reinforcement of the floor slab, a threshold 2 inches (51 mm) maximum in height shall be permitted.

608.7 Shower enclosures. Shower compartment enclosures for shower compartments shall not obstruct controls or obstruct transfer from wheelchairs onto shower seats.

608.8 Water temperature. Showers shall deliver water that is 120°F (49°C) maximum.

SECTION 609
GRAB BARS

609.1 General. Grab bars in accessible toilet or bathing facilities shall comply with Section 609.

INTERNATIONAL CODE COUNCIL®
Copyright © 2014 ICC. ALL RIGHTS RESERVED. Accessed by William Munson on Jan 4, 2017 9:33:41 PM pursuant to License Agreement with ICC. No further reproduction or distribution authorized. ANY UNAUTHORIZED REPRODUCTION OR DISTRIBUTION IS A VIOLATION OF THE FEDERAL COPYRIGHT ACT AND THE LICENSE AGREEMENT, AND SUBJECT TO CIVIL AND CRIMINAL PENALTIES THEREUNDER.

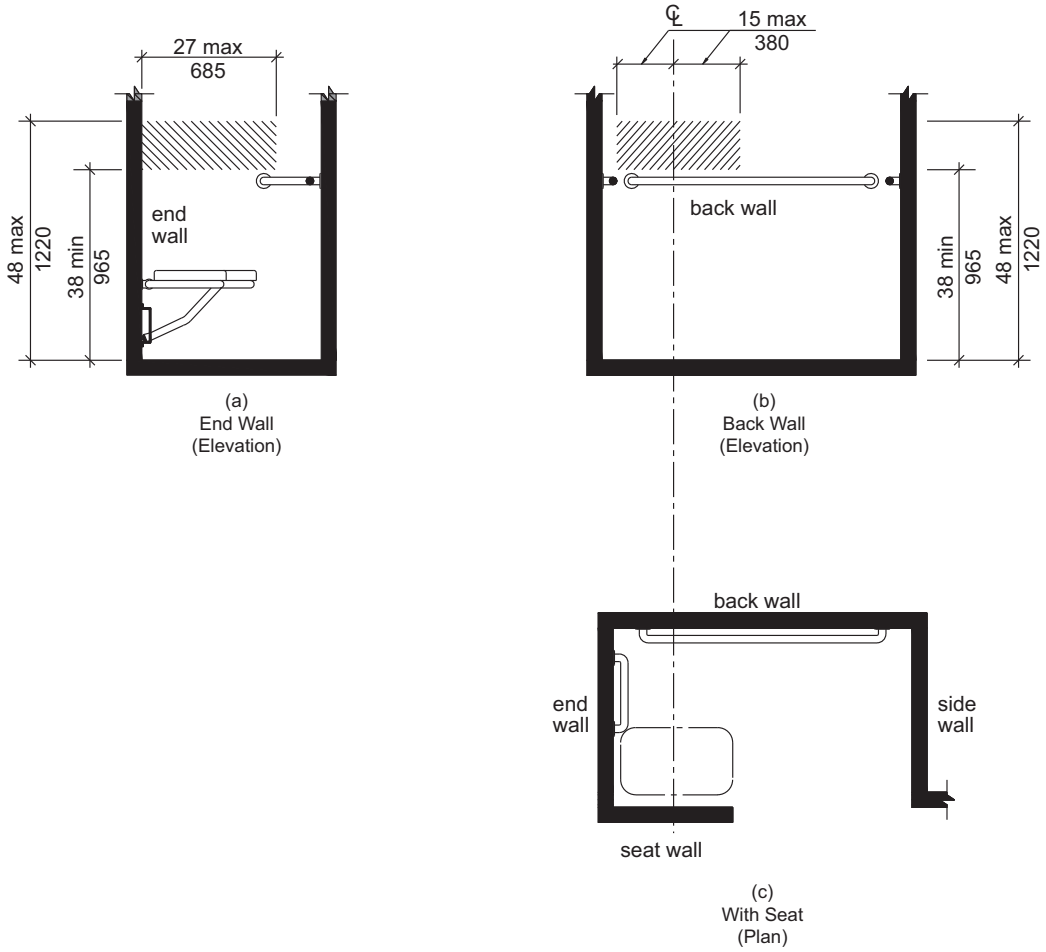

FIGURE 608.4.3
ALTERNATE ROLL-IN-TYPE SHOWER CONTROL AND HANDSHOWER LOCATION

609.2 Cross section. Grab bars shall have a cross section complying with Section 609.2.1 or 609.2.2.

609.2.1 Circular cross section. Grab bars with a circular cross section shall have an outside diameter of $1^1/_4$ inch (32 mm) minimum and 2 inches (51 mm) maximum.

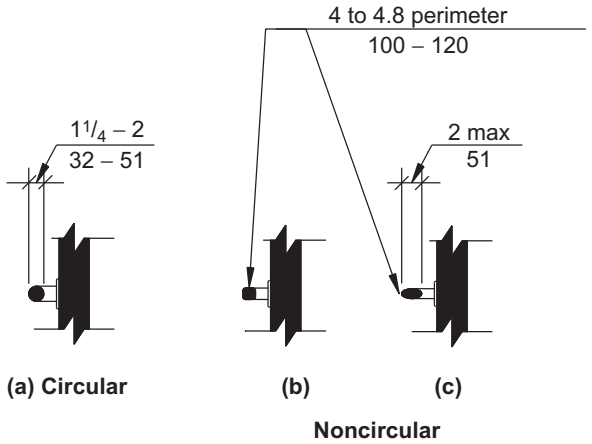

FIGURE 609.2
SIZE OF GRAB BARS

609.2.2 Noncircular cross section. Grab bars with a noncircular cross section shall have a cross section dimension of 2 inches (51 mm) maximum, and a perimeter dimension of 4 inches (100 mm) minimum and 4.8 inches (120 mm) maximum.

609.3 Spacing. The space between the wall and the grab bar shall be $1^1/_2$ inches (38 mm). The space between the grab bar and projecting objects below and at the ends of the grab bar shall be $1^1/_2$ inches (38 mm) minimum. The space between the grab bar and projecting objects above the grab bar shall be 12 inches (305 mm) minimum.

Exceptions:

1. The space between the grab bars and shower controls, shower fittings, and other grab bars above the grab bar shall be permitted to be $1^1/_2$ inches (38 mm) minimum.
2. Recessed dispensers projecting from the wall $^1/_4$ inch (6.4 mm) maximum measured from the face of the dispenser and complying with Section 604.7 shall be permitted within the 12-inch (305 mm) space above and the $1^1/_2$ inch (38 mm) spaces below and at the ends of the grab bar.

INTERNATIONAL CODE COUNCIL®
Copyright © 2014 ICC. ALL RIGHTS RESERVED. Accessed by William Munson on Jan 4, 2017 9:33:41 PM pursuant to License Agreement with ICC. No further reproduction or distribution authorized. ANY UNAUTHORIZED REPRODUCTION OR DISTRIBUTION IS A VIOLATION OF THE FEDERAL COPYRIGHT ACT AND THE LICENSE AGREEMENT, AND SUBJECT TO CIVIL AND CRIMINAL PENALTIES THEREUNDER.

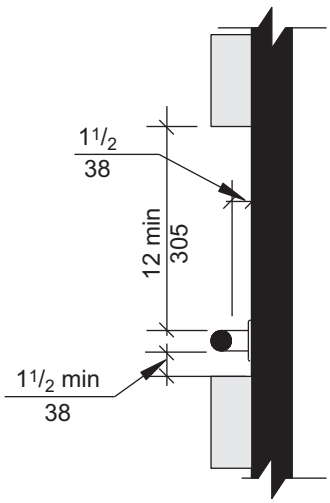

FIGURE 609.3
SPACING OF GRAB BARS

609.4 Position of grab bars.

609.4.1 General. Grab bars shall be installed in a horizontal position, 33 inches (840 mm) minimum and 36 inches (915 mm) maximum above the floor measured to the top of the gripping surface or shall be installed as required by Items 1 through 3.

1. The lower grab bar on the back wall of a bathtub shall comply with Section 607.4.1.1 or 607.4.2.1.
2. Vertical grab bars shall comply with Sections 604.5.1, 607.4.1.2.2, 607.4.2.2, and 608.3.1.2.
3. Grab bars at water closets primarily for children's use shall comply with Section 609.4.2.

609.4.2 Position of children's grab bars. At water closets primarily for children's use complying with Section 604.11, grab bars shall be installed in a horizontal position 18 inches (455 mm) minimum and 27 inches (685 mm) maximum above the floor measured to the top of the gripping surface.

609.5 Surface hazards. Grab bars, and any wall or other surfaces adjacent to grab bars, shall be free of sharp or abrasive elements. Edges shall be rounded.

609.6 Fittings. Grab bars shall not rotate within their fittings.

609.7 Installation and configuration. Grab bars shall be installed in any manner that provides a gripping surface at the locations specified in this standard and does not obstruct the clear floor space. Horizontal and vertical grab bars shall be permitted to be separate bars, a single piece bar, or combination thereof.

609.8 Structural strength. Allowable stresses shall not be exceeded for materials used where a vertical or horizontal force of 250 pounds (1112 N) is applied at any point on the grab bar, fastener mounting device, or supporting structure.

SECTION 610
SEATS

610.1 General. Seats in accessible bathtubs and shower compartments shall comply with Section 610.

610.2 Bathtub seats. The height of bathtub seats shall be 17 inches (430 mm) minimum and 19 inches (485 mm) maximum above the bathroom floor, measured to the top of the seat. Removable in-tub seats shall be 15 inches (380 mm) minimum and 16 inches (405 mm) maximum in depth. Removable in-tub seats shall be capable of secure placement. Permanent seats shall be 15 inches (380 mm) minimum in depth and shall extend from the back wall to or beyond the outer edge of the bathtub. Permanent seats shall be positioned at the head end of the bathtub.

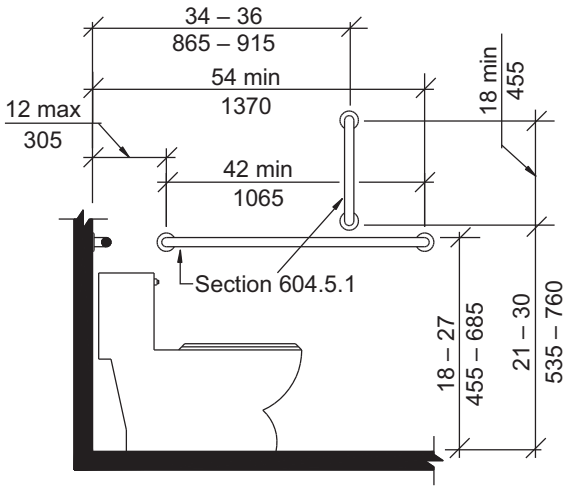

Note: For adult dimensions see Figure 604.5.1
(a) Side Wall View

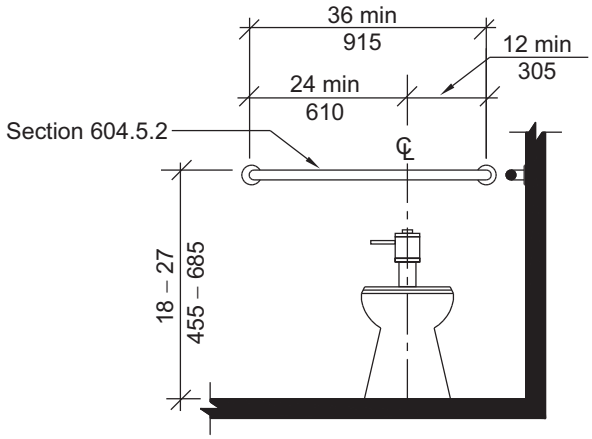

Note: For adult dimensions see Figure 604.5.2
(b) Rear Wall View

FIGURE 609.4.2
POSITION OF CHILDREN'S GRAB BARS

INTERNATIONAL CODE COUNCIL®
Copyright © 2014 ICC. ALL RIGHTS RESERVED. Accessed by William Munson on Jan 4, 2017 9:33:41 PM pursuant to License Agreement with ICC. No further reproduction or distribution authorized. ANY UNAUTHORIZED REPRODUCTION OR DISTRIBUTION IS A VIOLATION OF THE FEDERAL COPYRIGHT ACT AND THE LICENSE AGREEMENT, AND SUBJECT TO CIVIL AND CRIMINAL PENALTIES THEREUNDER.

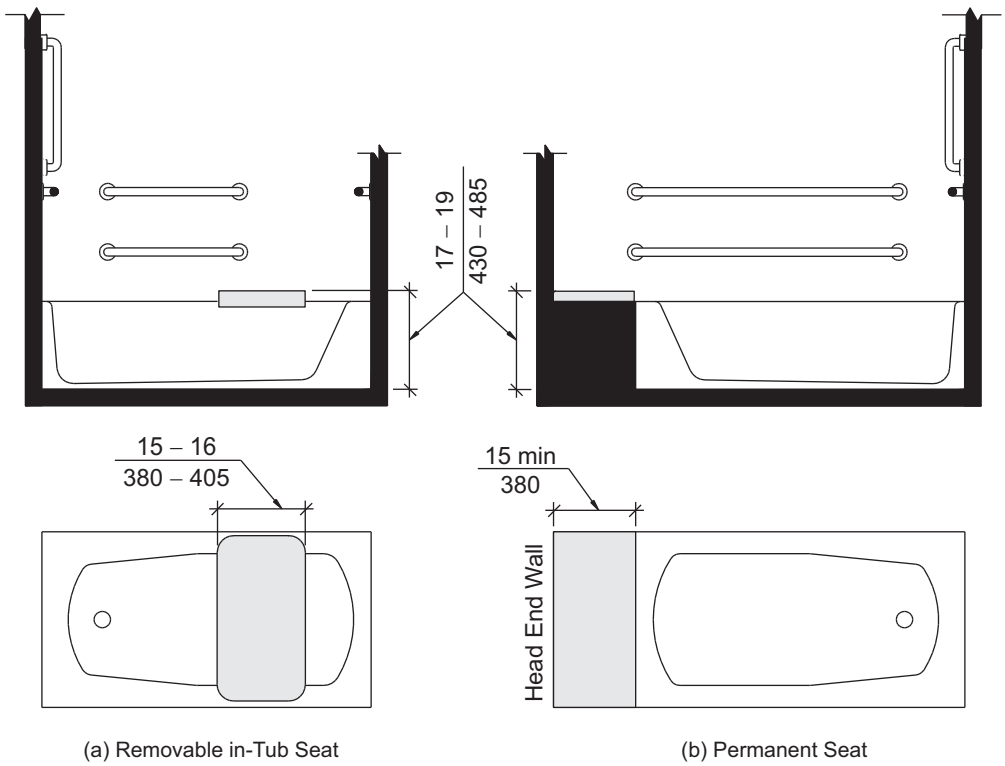

FIGURE 610.2
BATHTUB SEATS

610.3 Shower compartment seats. The height of shower compartment seats shall be 17 inches (430 mm) minimum and 19 inches (485 mm) maximum above the bathroom floor, measured to the top of the seat. In transfer-type and alternate roll-in-type showers, the seat shall extend along the seat wall to a point within 3 inches (75 mm) of the compartment entry. In standard roll-in-type showers, the seat shall extend from the control wall to a point within 3 inches (75 mm) of the compartment entry. Seats shall comply with Section 610.3.1 or 610.3.2.

MNMNMN

Exception: In standard roll-in type showers exceeding 36 inches (915 mm) in depth, the seat shall not be required to exceed 32 inches (815 mm) in length.

610.3.1 Rectangular seats. The rear edge of a rectangular seat shall be $2^1/_2$ inches (64 mm) maximum and the front edge 15 inches (380 mm) minimum and 16 inches (405 mm) maximum from the seat wall. The side edge of the seat shall be $1^1/_2$ inches (38 mm) maximum from the back wall of a transfer-type shower and $1^1/_2$ inches (38 mm) maximum from the control wall of a roll-in-type shower.

610.3.2 L-shaped seats. The rear edge of an L-shaped seat shall be $2^1/_2$ inches (64 mm) maximum and the front edge 15 inches (380 mm) minimum and 16 inches (405 mm) maximum from the seat wall. The rear edge of the "L" portion of the seat shall be $1^1/_2$ inches (38 mm) maximum from the wall and the front edge shall be 14 inches (355 mm) minimum and 15 inches (380 mm) maximum from the wall. The end of the "L" shall be 22 inches (560 mm) minimum and 23 inches (585 mm) maximum from the main seat wall.

610.4 Structural strength. Allowable stresses shall not be exceeded for materials used where a vertical or horizontal force of 250 pounds (1112 N) is applied at any point on the seat, fastener mounting device, or supporting structure.

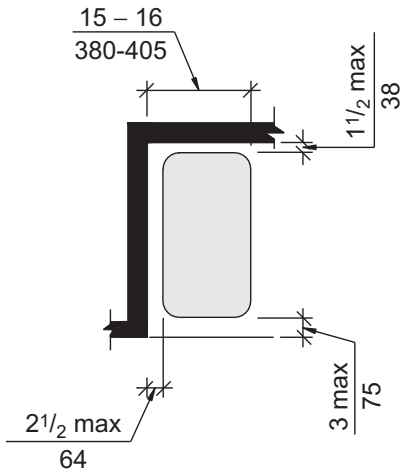

FIGURE 610.3.1
RECTANGULAR SHOWER COMPARTMENT SEAT

INTERNATIONAL CODE COUNCIL®
Copyright © 2014 ICC. ALL RIGHTS RESERVED. Accessed by William Munson on Jan 4, 2017 9:33:41 PM pursuant to License Agreement with ICC. No further reproduction or distribution authorized. ANY UNAUTHORIZED REPRODUCTION OR DISTRIBUTION IS A VIOLATION OF THE FEDERAL COPYRIGHT ACT AND THE LICENSE AGREEMENT, AND SUBJECT TO CIVIL AND CRIMINAL PENALTIES THEREUNDER.

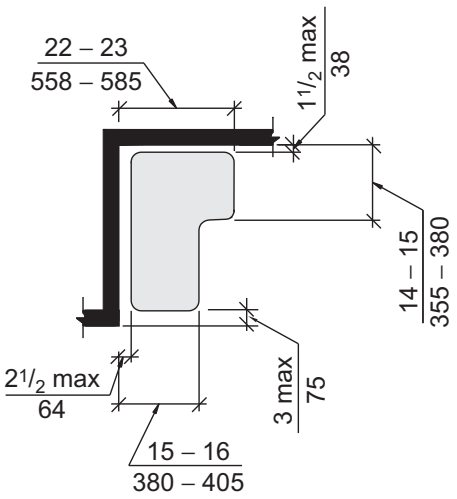

FIGURE 610.3.2
L-SHAPED SHOWER COMPARTMENT SEAT

SECTION 611
WASHING MACHINES AND CLOTHES DRYERS

611.1 General. Accessible washing machines and clothes dryers shall comply with Section 611.

611.2 Clear floor space. A clear floor space complying with Section 305, positioned for parallel approach, shall be provided. For top loading machines, the clear floor space shall be centered on the appliance. For front loading machines, the centerline of the clear floor space shall be offset 24 inches (610 mm) maximum from the centerline of the door opening.

611.3 Operable parts. Operable parts, including doors, lint screens, detergent and bleach compartments, shall comply with Section 309.

611.4 Height. Top loading machines shall have the door to the laundry compartment 36 inches (915 mm) maximum above the floor. Front loading machines shall have the bottom of the opening to the laundry compartment 15 inches (380 mm) minimum and 36 inches (915 mm) maximum above the floor.

SECTION 612
SAUNAS AND STEAM ROOMS

612.1 General. Saunas and steam rooms shall comply with Section 612.

612.2 Bench. Where seating is provided in saunas and steam rooms, at least one bench shall comply with Section 903. Doors shall not swing into the clear floor space required by Section 903.2.

612.3 Turning space. A turning space complying with Section 304 shall be provided within saunas and steam rooms.

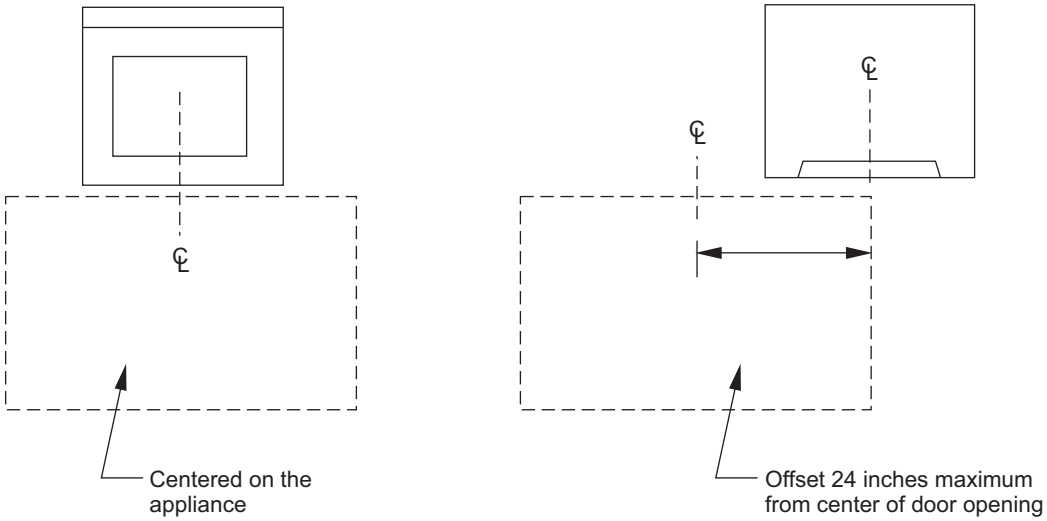

FIGURE 611.2
CLEAR FLOOR SPACE

INTERNATIONAL CODE COUNCIL®
Copyright © 2014 ICC. ALL RIGHTS RESERVED. Accessed by William Munson on Jan 4, 2017 9:33:41 PM pursuant to License Agreement with ICC. No further reproduction or distribution authorized. ANY UNAUTHORIZED REPRODUCTION OR DISTRIBUTION IS A VIOLATION OF THE FEDERAL COPYRIGHT ACT AND THE LICENSE AGREEMENT, AND SUBJECT TO CIVIL AND CRIMINAL PENALTIES THEREUNDER.

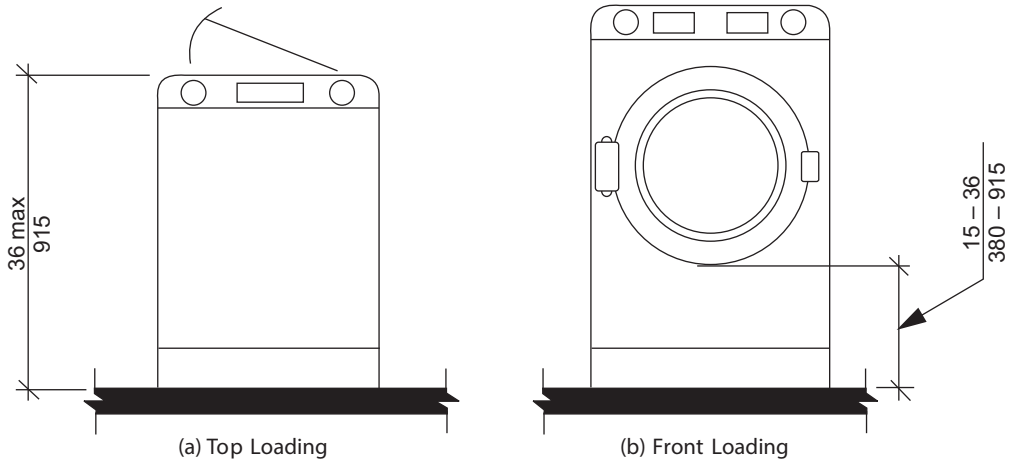

FIGURE 611.4
HEIGHT OF LAUNDRY EQUIPMENT

INTERNATIONAL CODE COUNCIL®
Copyright © 2014 ICC. ALL RIGHTS RESERVED. Accessed by William Munson on Jan 4, 2017 9:33:41 PM pursuant to License Agreement with ICC. No further reproduction or distribution authorized. ANY UNAUTHORIZED REPRODUCTION OR DISTRIBUTION IS A VIOLATION OF THE FEDERAL COPYRIGHT ACT AND THE LICENSE AGREEMENT, AND SUBJECT TO CIVIL AND CRIMINAL PENALTIES THEREUNDER.

INTERNATIONAL CODE COUNCIL®
Copyright © 2014 ICC. ALL RIGHTS RESERVED. Accessed by William Munson on Jan 4, 2017 9:33:41 PM pursuant to License Agreement with ICC. No further reproduction or distribution authorized. ANY UNAUTHORIZED REPRODUCTION OR DISTRIBUTION IS A VIOLATION OF THE FEDERAL COPYRIGHT ACT AND THE LICENSE AGREEMENT, AND SUBJECT TO CIVIL AND CRIMINAL PENALTIES THEREUNDER.

CHAPTER 7
COMMUNICATION ELEMENTS AND FEATURES

SECTION 701
GENERAL

701.1 Scope. Communications elements and features required to be accessible by the scoping provisions adopted by the administrative authority shall comply with the applicable provisions of Chapter 7.

SECTION 702
ALARMS

702.1 General. Accessible audible and visible alarms and notification appliances shall be installed in accordance with NFPA 72 listed in Section 105.2.2, be powered by a commercial light and power source, be permanently connected to the wiring of the premises electric system, and be permanently installed.

SECTION 703
SIGNS

703.1 General. Accessible signs shall comply with Section 703. Tactile signs shall contain both raised characters and braille. Where signs with both visual and raised characters are required, either one sign with both visual and raised characters, or two separate signs, one with visual, and one with raised characters, shall be provided.

703.1.1 Designations. Interior and exterior signs identifying permanent rooms and spaces shall comply with Sections 703.1, 703.2, and 703.3.

Exception: Exterior signs that are not located at the door to the space they serve shall not be required to comply with Section 703.3.

703.1.2 Directional and informational signs. Signs that provide direction to or information about interior spaces and facilities of the site shall comply with Section 703.2.

703.1.3 Pictograms. Where pictograms are provided as designations of permanent interior rooms and spaces, the pictograms shall comply with Section 703.5 and shall have text descriptors located directly below the pictogram field and complying with Sections 703.2 and 703.3.

Exception: Pictograms that provide information about a room or space, such as "No Smoking," occupant logos, and the International Symbol of Accessibility, are not required to have text descriptors.

703.2 Visual Characters.

703.2.1 General. Visual characters shall comply with the following:

1. Visual characters that also serve as raised characters shall comply with Section 703.3, or
2. Visual characters on VMS signage shall comply with Section 703.7, or
3. Visual characters not covered in items 1 and 2 shall comply with Section 703.2.

Exception: The visual and raised requirements of item 1 shall be permitted to be provided by two separate signs that provide corresponding information provided one sign complies with Section 703.2 and the second sign complies with Section 703.3.

703.2.2 Case. Characters shall be uppercase, lowercase, or a combination of both.

703.2.3 Style. Characters shall be conventional in form. Characters shall not be italic, oblique, script, highly decorative, or of other unusual forms.

703.2.4 Character Height. The uppercase letter "I" shall be used to determine the allowable height of all characters of a font. The uppercase letter "I" of the font shall have a minimum height complying with Table 703.2.4. Viewing distance shall be measured as the horizontal distance between the character and an obstruction preventing further approach towards the sign.

Exception: In assembly seating where the maximum viewing distance is 100 feet (30.5 m) or greater, the height of the uppercase "I" of fonts shall be permitted

TABLE 703.2.4
VISUAL CHARACTER HEIGHT

HEIGHT ABOVE FLOOR TO BASELINE OF CHARACTER	HORIZONTAL VIEWING DISTANCE	MINIMUM CHARACTER HEIGHT
40 inches (1015 mm) to less than or equal to 70 inches (1780 mm)	Less than 6 feet (1830 mm)	$^5/_8$ inch (16 mm)
	6 feet (1830 mm) and greater	$^5/_8$ inch (16 mm), plus $^1/_8$ inch (3.2 mm) per foot (305 mm) of viewing distance above 6 feet (1830 mm)
Greater than 70 inches (1780 mm) to less than or equal to 120 inches (3050 mm)	Less than 15 feet (4570 mm)	2 inches (51 mm), plus $^1/_8$ inch (3.2 mm) per foot (305 mm) of viewing distance above 15 feet (4570 mm)
	15 feet (4570 mm) and greater	
Greater than 120 inches (3050 mm)	Less than 21 feet (6400 mm)	3 inches (75 mm), plus $^1/_8$ inch (3.2 mm) per foot (305 mm) of viewing distance above 21 feet (6400 mm)
	21 feet (6400 mm) and greater	

INTERNATIONAL CODE COUNCIL®
Copyright © 2014 ICC. ALL RIGHTS RESERVED. Accessed by William Munson on Jan 4, 2017 9:33:41 PM pursuant to License Agreement with ICC. No further reproduction or distribution authorized. ANY UNAUTHORIZED REPRODUCTION OR DISTRIBUTION IS A VIOLATION OF THE FEDERAL COPYRIGHT ACT AND THE LICENSE AGREEMENT, AND SUBJECT TO CIVIL AND CRIMINAL PENALTIES THEREUNDER.

to be 1 inch (25 mm) for every 30 feet (9145 mm) of viewing distance, provided the character height is 8 inches (205 mm) minimum. Viewing distance shall be measured as the horizontal distance between the character and where someone is expected to view the sign.

703.2.5 Character Width. The uppercase letter "O" shall be used to determine the allowable width of all characters of a font. The width of the uppercase letter "O" of the font shall be 55 percent minimum and 110 percent maximum of the height of the uppercase "I" of the font.

703.2.6 Stroke Width. The uppercase letter "I" shall be used to determine the allowable stroke width of all characters of a font. The stroke width shall be 10 percent minimum and 30 percent maximum of the height of the uppercase "I" of the font.

703.2.7 Character Spacing. Spacing shall be measured between the two closest points of adjacent characters within a message, excluding word spaces. Spacing between individual characters shall be 10 percent minimum and 35 percent maximum of the character height.

703.2.8 Line Spacing. Spacing between the baselines of separate lines of characters within a message shall be 135 percent minimum and 170 percent maximum of the character height.

Exception: In assembly seating where the maximum viewing distance is 100 feet (30.5 m) or greater, the spacing between the baselines of separate lines of characters within a message shall be permitted to be 120 percent minimum and 170 percent maximum of the character height.

703.2.9 Height Above Floor. Visual characters shall be 40 inches (1015 mm) minimum above the floor of the viewing position, measured to the baseline of the character. Heights shall comply with Table 703.2.4, based on the size of the characters on the sign.

Exception: Visual characters indicating elevator car controls shall not be required to comply with Section 703.2.9.

703.2.10 Finish and Contrast. Characters and their background shall have a non-glare finish. Characters shall contrast with their background, with either light characters on a dark background, or dark characters on a light background.

703.3 Raised Characters.

703.3.1 General. Raised characters shall comply with Section 703.3, and shall be duplicated in braille complying with Section 703.4.

703.3.2 Depth. Raised characters shall be raised $^{1}/_{32}$ inch (0.8 mm) minimum above their background.

703.3.3 Case. Characters shall be uppercase.

703.3.4 Style. Characters shall not be italic, oblique, script, highly decorative, or of other unusual forms.

703.3.5 Character Height. The uppercase letter "I" shall be used to determine the allowable height of all characters of a font. The height of the uppercase letter "I" of the font, measured vertically from the baseline of the character, shall be $^{5}/_{8}$ inch (16 mm) minimum, and 2 inches (51 mm) maximum.

Exception: Where separate raised and visual characters with the same information are provided, the height of the raised uppercase letter "I" shall be permitted to be $^{1}/_{2}$ inch (13 mm) minimum.

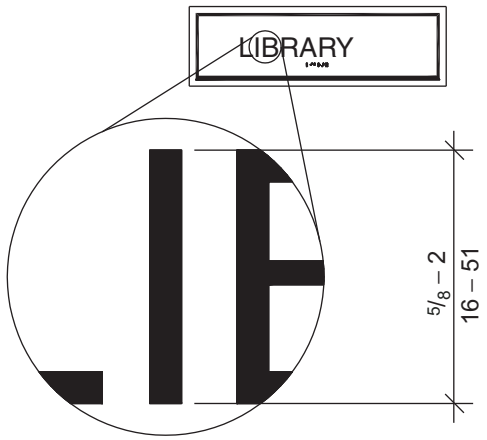

FIGURE 703.3.5
CHARACTER HEIGHT

703.3.6 Character Width. The uppercase letter "O" shall be used to determine the allowable width of all characters of a font. The width of the uppercase letter "O" of the font shall be 55 percent minimum and 110 percent maximum of the height of the uppercase "I" of the font.

703.3.7 Stroke Width. Raised character stroke width shall comply with Section 703.3.7. The uppercase letter "I" of the font shall be used to determine the allowable stroke width of all characters of a font.

703.3.7.1 Maximum. The stroke width shall be 15 percent maximum of the height of the uppercase letter "I" measured at the top surface of the character, and 30 percent maximum of the height of the uppercase letter "I" measured at the base of the character.

703.3.7.2 Minimum. When characters are both visual and raised, the stroke width shall be 10 percent minimum of the height of the uppercase letter "I".

703.3.8 Character Spacing. Character spacing shall be measured between the two closest points of adjacent raised characters within a message, excluding word spaces. Spacing between individual raised characters shall be $^{1}/_{8}$ inch (3.2 mm) minimum measured at the top surface of the characters, $^{1}/_{16}$ inch (1.6 mm) minimum measured at the base of the characters, and four times the raised character stroke width maximum. Characters shall be separated from raised borders and decorative elements $^{3}/_{8}$ inch (9.5 mm) minimum.

703.3.9 Line Spacing. Spacing between the baselines of separate lines of raised characters within a message shall

INTERNATIONAL CODE COUNCIL®
Copyright © 2014 ICC. ALL RIGHTS RESERVED. Accessed by William Munson on Jan 4, 2017 9:33:41 PM pursuant to License Agreement with ICC. No further reproduction or distribution authorized. ANY UNAUTHORIZED REPRODUCTION OR DISTRIBUTION IS A VIOLATION OF THE FEDERAL COPYRIGHT ACT AND THE LICENSE AGREEMENT, AND SUBJECT TO CIVIL AND CRIMINAL PENALTIES THEREUNDER.

be 135 percent minimum and 170 percent maximum of the raised character height.

703.3.10 Height above Floor. Raised characters shall be 48 inches (1220 mm) minimum above the floor, measured to the baseline of the lowest raised character and 60 inches (1525 mm) maximum above the floor, measured to the baseline of the highest raised character.

Exception: Raised characters for elevator car controls shall not be required to comply with Section 703.3.10.

703.3.11 Location. Where a sign containing raised characters and braille is provided at a door, the sign shall be alongside the door at the latch side. Where a sign containing raised characters and braille is provided at double doors with one active leaf, the sign shall be located on the inactive leaf. Where a sign containing raised characters and braille is provided at double doors with two active leaves, the sign shall be to the right of the right-hand door. Where there is no wall space on the latch side of a single door, or to the right side of double doors, signs shall be on the nearest adjacent wall. Signs containing raised characters and braille shall be located so that a clear floor area 18 inches (455 mm) minimum by 18 inches (455 mm) minimum, centered on the raised characters is provided beyond the arc of any door swing between the closed position and 45 degree open position.

Exception: Signs containing raised characters and braille shall be permitted on the push side of doors with closers and without hold-open devices.

703.3.12 Finish and Contrast. Characters and their background shall have a non-glare finish. Characters shall contrast with their background with either light characters on a dark background, or dark characters on a light background.

Exception: Where separate raised characters and visual characters with the same information are provided, raised characters are not required to have nonglare finish or to contrast with their background.

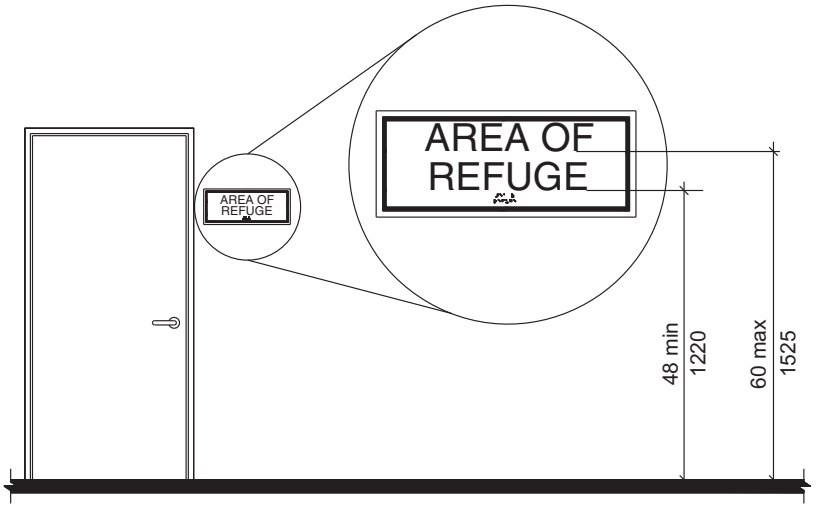

Note: For braille character mounting height see Section 703.4.5

FIGURE 703.3.10
HEIGHT OF RAISED CHARACTERS ABOVE FLOOR

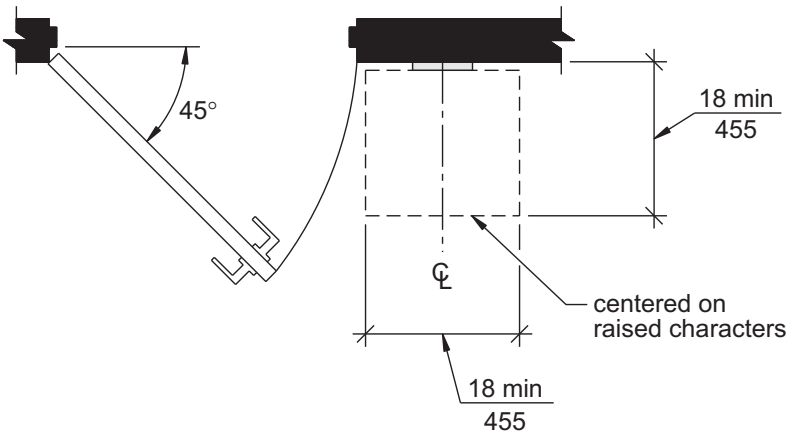

FIGURE 703.3.11
LOCATION OF SIGNS AT DOORS

INTERNATIONAL CODE COUNCIL®
Copyright © 2014 ICC. ALL RIGHTS RESERVED. Accessed by William Munson on Jan 4, 2017 9:33:41 PM pursuant to License Agreement with ICC. No further reproduction or distribution authorized. ANY UNAUTHORIZED REPRODUCTION OR DISTRIBUTION IS A VIOLATION OF THE FEDERAL COPYRIGHT ACT AND THE LICENSE AGREEMENT, AND SUBJECT TO CIVIL AND CRIMINAL PENALTIES THEREUNDER.

703.4 Braille.

703.4.1 General. Braille shall be contracted (Grade 2) braille and shall comply with Section 703.4.

703.4.2 Uppercase letters. The indication of an uppercase letter or letters shall only be used before the first word of sentences, proper nouns and names, individual letters of the alphabet, initials, or acronyms.

703.4.3 Dimensions. Braille dots shall have a domed or rounded shape and shall comply with Table 703.4.3.

703.4.4 Position. Braille shall be below the corresponding text. If text is multilined, braille shall be placed below entire text. Braille shall be separated $^{3}/_{8}$ inch (9.5 mm) minimum from any other raised characters and $^{3}/_{8}$ inch (9.5 mm) minimum from raised borders and decorative elements. Braille provided on elevator car controls shall be separated $^{3}/_{16}$ inch (4.8 mm) minimum either directly below or adjacent to the corresponding raised characters or symbols.

703.4.5 Mounting height. Braille shall be 48 inches (1220 mm) minimum and 60 inches (1525 mm) maximum above the floor, measured to the baseline of the braille cells.

Exception: Elevator car controls shall not be required to comply with Section 703.4.5.

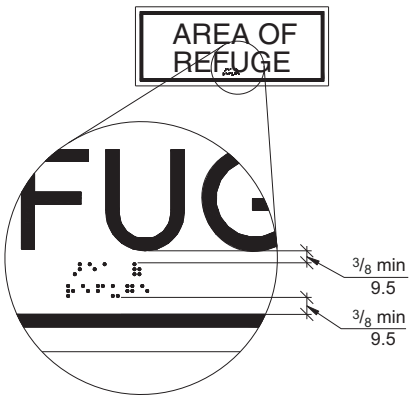

FIGURE 703.4.4
POSITION OF BRAILLE

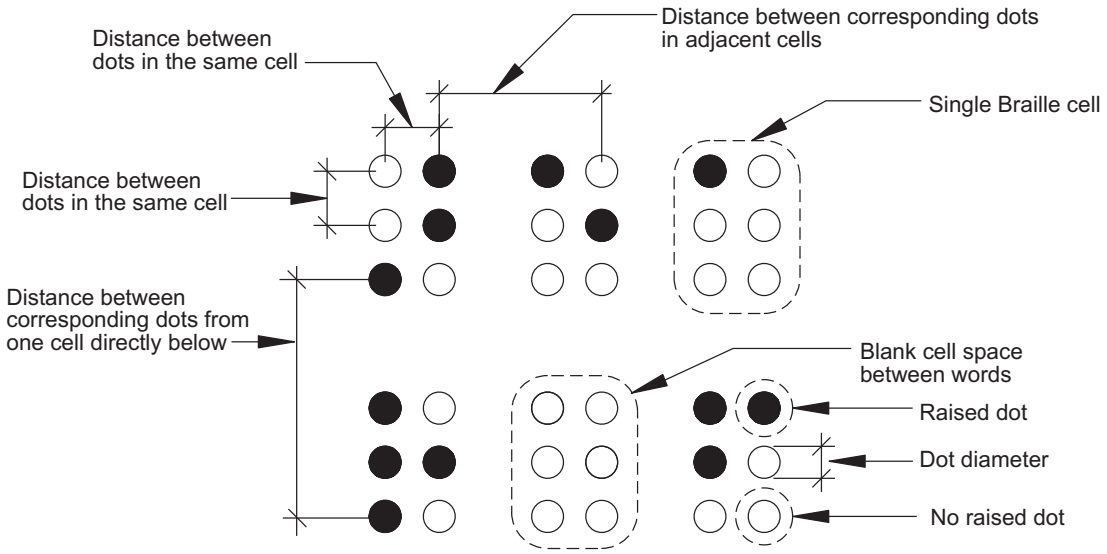

FIGURE 703.4.3
BRAILLE DIMENSIONS

TABLE 703.4.3
BRAILLE DIMENSIONS

MEASUREMENT RANGE	MINIMUM IN INCHES MAXIMUM IN INCHES
Dot base diameter	0.059 (1.5 mm) to 0.063 (1.6 mm)
Distance between two dots in the same cell	0.090 (2.3 mm) to 0.100 (2.5 mm)
Distance between corresponding dots in adjacent cells[1]	0.241 (6.1 mm) to 0.300 (7.6 mm)
Dot height	0.025 (0.6 mm) to 0.037 (0.9 mm)
Distance between corresponding dots from one cell directly below[1]	0.395 (10.0 mm) to 0.400 (10.2 mm)

1. Measured center to center.

INTERNATIONAL CODE COUNCIL®
Copyright © 2014 ICC. ALL RIGHTS RESERVED. Accessed by William Munson on Jan 4, 2017 9:33:41 PM pursuant to License Agreement with ICC. No further reproduction or distribution authorized. ANY UNAUTHORIZED REPRODUCTION OR DISTRIBUTION IS A VIOLATION OF THE FEDERAL COPYRIGHT ACT AND THE LICENSE AGREEMENT, AND SUBJECT TO CIVIL AND CRIMINAL PENALTIES THEREUNDER.

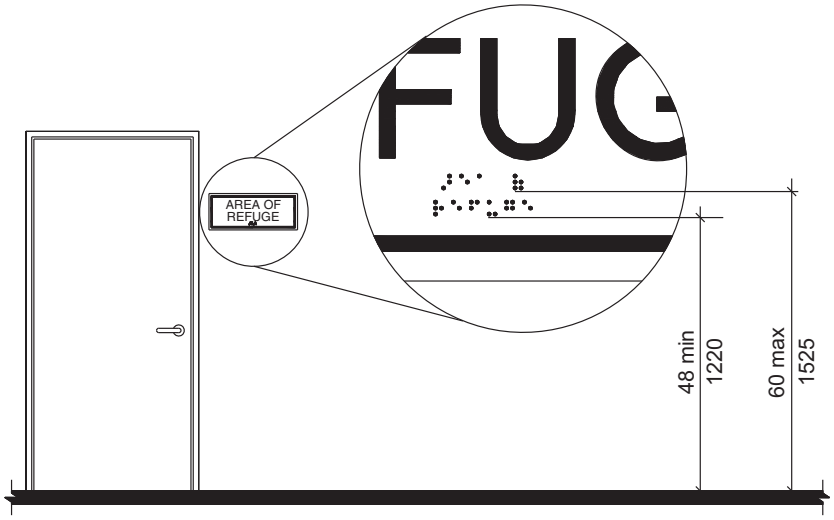

Note: For raised character mounting height see Section 703.3.10

FIGURE 703.4.5
HEIGHT OF BRAILLE CHARACTERS ABOVE FLOOR

703.5 Pictograms.

703.5.1 General. Pictograms shall comply with Section 703.5.

703.5.2 Pictogram field. Pictograms shall have a field 6 inches (150 mm) minimum in height. Characters or braille shall not be located in the pictogram field.

703.5.3 Finish and contrast. Pictograms and their fields shall have a nonglare finish. Pictograms shall contrast with their fields, with either a light pictogram on a dark field or a dark pictogram on a light field.

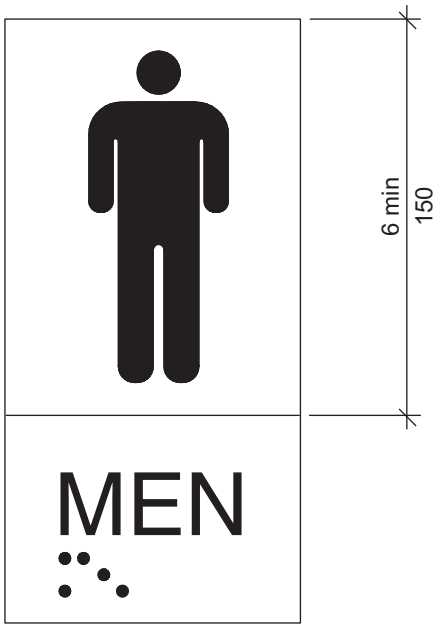

FIGURE 703.5
PICTOGRAM FIELD

703.6 Symbols of Accessibility.

703.6.1 General. Symbols of accessibility shall comply with Section 703.6.

7703.6.2 Finish and contrast. Symbols of accessibility and their backgrounds shall have a non-glare finish. Symbols of accessibility shall contrast with their backgrounds, with either a light symbol on a dark background or a dark symbol on a light background.

703.6.3 Symbols.

703.6.3.1 International Symbol of Accessibility. The International Symbol of Accessibility shall comply with Figure 703.6.3.1.

FIGURE 703.6.3.1
INTERNATIONAL SYMBOL OF ACCESSIBILITY

703.6.3.2 International Symbol of TTY. The International Symbol of TTY shall comply with Figure 703.6.3.2.

703.6.3.3 Assistive listening systems. Assistive listening systems shall be identified by the International Symbol of Access for Hearing Loss complying with Figure 703.6.3.3.

INTERNATIONAL CODE COUNCIL®
Copyright © 2014 ICC. ALL RIGHTS RESERVED. Accessed by William Munson on Jan 4, 2017 9:33:41 PM pursuant to License Agreement with ICC. No further reproduction or distribution authorized. ANY UNAUTHORIZED REPRODUCTION OR DISTRIBUTION IS A VIOLATION OF THE FEDERAL COPYRIGHT ACT AND THE LICENSE AGREEMENT, AND SUBJECT TO CIVIL AND CRIMINAL PENALTIES THEREUNDER.

FIGURE 703.6.3.2
INTERNATIONAL TTY SYMBOL

FIGURE 703.6.3.4
VOLUME-CONTROLLED TELEPHONE

FIGURE 703.6.3.3
INTERNATIONAL SYMBOL OF ACCESS FOR HEARING LOSS

703.6.3.4 Volume-controlled telephones. Telephones with volume controls shall be identified by a pictogram of a telephone handset with radiating sound waves on a square field complying with Figure 703.6.3.4.

703.7 Variable Message Signs.

703.7.1 General. High resolution variable message sign (VMS) characters shall comply with Sections 703.2 and 703.7.12 through 703.7.14. Low resolution variable message sign (VMS) characters shall comply with Section 703.7.

Exception: Theatrical performance related VMS signs, including but not limited to, text and translation delivery systems, surtitles and subtitles, shall not be required to comply with Section 703.7.1.

703.7.2 Case. Low resolution VMS characters shall be uppercase.

703.7.3 Style. Low resolution VMS characters shall be conventional in form, shall be san serif, and shall not be italic, oblique, script, highly decorative, or of other unusual forms.

703.7.4 Character height. The uppercase letter "I" shall be used to determine the allowable height of all low resolution VMS characters of a font. Viewing distance shall be measured as the horizontal distance between the character and an obstruction preventing further approach towards the sign. The uppercase letter "I" of the font shall have a minimum height complying with Table 703.7.4.

Exception: In assembly seating where the maximum viewing distance is 100 feet (30.5 m) or greater, the height of the uppercase "I" of low resolution VMS fonts shall be permitted to be 1 inch (25 mm) for every 30 feet (9145 mm) of viewing distance, provided the character height is 8 inches (205 mm) minimum. Viewing distance shall be measured as the horizontal distance between the character and where someone is expected to view the sign.

TABLE 703.7.4
LOW RESOLUTION VMS CHARACTER HEIGHT

HEIGHT ABOVE FLOOR TO BASELINE OF CHARACTER	HORIZONTAL VIEWING DISTANCE	MINIMUM CHARACTER HEIGHT
40 inches (1015 mm) to less than or equal to 70 inches (1780 mm)	Less than 10 feet (3050 mm)	2 inches (51 mm)
	10 feet (3050 mm) and greater	2 inches (51 mm), plus $^1/_5$ inch (5.1 mm) per foot (305 mm) of viewing distance above 10 feet (3050 mm)
Greater than 70 inches (1780 mm) to less than or equal to 120 inches (3050 mm)	Less than 15 feet (4570 mm)	3 inches (75 mm)
	15 feet (4570 mm) and greater	3 inches (75 mm), plus $^1/_5$ inch (5.1 mm) per foot (305 mm) of viewing distance above 15 feet (4570 mm)
Greater than 120 inches (3050 mm)	Less than 20 feet (6095 mm)	4 inches (100 mm)
	20 feet (6095 mm) and greater	4 inches (100 mm), plus $^1/_5$ inch (5.1 mm) per foot (305 mm) of viewing distance above 20 feet (6095 mm)

INTERNATIONAL CODE COUNCIL®
Copyright © 2014 ICC. ALL RIGHTS RESERVED. Accessed by William Munson on Jan 4, 2017 9:33:41 PM pursuant to License Agreement with ICC. No further reproduction or distribution authorized. ANY UNAUTHORIZED REPRODUCTION OR DISTRIBUTION IS A VIOLATION OF THE FEDERAL COPYRIGHT ACT AND THE LICENSE AGREEMENT, AND SUBJECT TO CIVIL AND CRIMINAL PENALTIES THEREUNDER.

703.7.5 Character width. The uppercase letter "O" shall be used to determine the allowable width of all low resolution VMS characters of a font. Low resolution VMS characters shall comply with the pixel count for character width in Table 703.7.5.

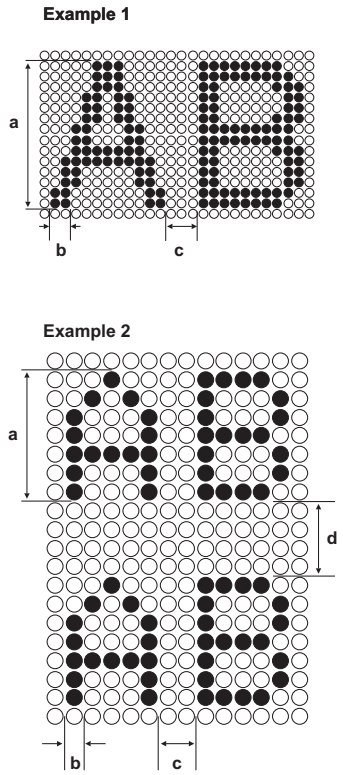

	Property	Example 1	Example 2
a	Character Height	14 Pixels	7 Pixels
b	Stroke Width	2 Pixels	1 Pixel
c	Character Spacing	3 Pixels	2 Pixels
d	Line Spacing		4 Pixels

FIGURE 703.7.5
LOW RESOLUTION VMS SIGNAGE CHARACTERS

703.7.6 Stroke width. The uppercase letter "I" shall be used to determine the allowable stroke width of all low resolution VMS characters of a font. Low resolution VMS characters shall comply with the pixel count for stroke width in Table 703.7.5.

703.7.7 Character spacing. Spacing shall be measured between the two closest points of adjacent low resolution VMS characters within a message, excluding word spaces. Low resolution VMS character spacing shall comply with the pixel count for character spacing in Table 703.7.5.

703.7.8 Line spacing. Low resolution VMS characters shall comply with Section 703.2.8.

703.7.9 Height above floor. Low resolution VMS characters shall be 40 inches (1015 mm) minimum above the floor of the viewing position, measured to the baseline of the character. Heights of low resolution variable message sign characters shall comply with Table 703.7.4, based on the size of the characters on the sign.

703.7.10 Finish. The background of Low resolution VMS characters shall have a non-glare finish.

703.7.11 Contrast. Low resolution VMS characters shall be light characters on a dark background.

703.7.12 Protective covering. Where a protective layer is placed over VMS characters through which the VMS characters must be viewed, the protective covering shall have a non-glare finish.

703.7.13 Brightness. The brightness of variable message signs in exterior locations shall automatically adjust in response to changes in ambient light levels.

703.7.14 Rate of change. Where a VMS message can be displayed in its entirety on a single screen, it shall be displayed on a single screen and shall remain motionless on the screen for a minimum 3 seconds or one second minimum for every 7 characters of the message including spaces whichever is longer.

703.8 Remote Infrared Audible Sign (RIAS) Systems.

703.8.1 General. Remote Infrared Audible Sign Systems shall comply with Section 703.8.

TABLE 703.7.5
PIXEL COUNT FOR LOW RESOLUTION VMS SIGNAGE[1]

CHARACTER HEIGHT	CHARACTER WIDTH RANGE	STROKE WIDTH RANGE	CHARACTER SPACING RANGE
7	5-6	1	2
8	6-7	1-2	2-3
9	6-8	1-2	2-3
10	7-9	2	2-4
11	8-10	2	2-4
12	8-11	2	3-4
13	9-12	2-3	3-5
14	10-13	2-3	3-5
15	11-14	2-3	3-5

1. Measured in pixels.

INTERNATIONAL CODE COUNCIL®
Copyright © 2014 ICC. ALL RIGHTS RESERVED. Accessed by William Munson on Jan 4, 2017 9:33:41 PM pursuant to License Agreement with ICC. No further reproduction or distribution authorized. ANY UNAUTHORIZED REPRODUCTION OR DISTRIBUTION IS A VIOLATION OF THE FEDERAL COPYRIGHT ACT AND THE LICENSE AGREEMENT, AND SUBJECT TO CIVIL AND CRIMINAL PENALTIES THEREUNDER.

703.8.2 Transmitters. Where provided, Remote Infrared Audible Sign Transmitters shall be designed to communicate with receivers complying with Section 703.8.3.

703.8.3 Infrared audible sign receivers.

703.8.3.1 Frequency. Basic speech messages shall be frequency modulated at 25 kHz, with a +/- 2.5 kHz deviation, and shall have an infrared wavelength from 850 to 950 nanometer (nm).

703.8.3.2 Optical power density. Receiver shall produce a 12 decibel (dB) signal-plus-noise-to-noise ratio with a 1 kHz modulation tone at +/- 2.5 kHz deviation of the 25 kHz subcarrier at an optical power density of 26 picowatts per square millimeter measured at the receiver photosensor aperture.

703.8.3.3 Audio output. The audio output from an internal speaker shall be at 75 dBA minimum at 18 inches (455 mm) with a maximum distortion of 10 percent.

703.8.3.4 Reception range. The receiver shall be designed for a high dynamic range and capable of operating in full-sun background illumination.

703.8.3.5 Multiple signals. A receiver provided for the capture of the stronger of two signals in the receiver field of view shall provide a received power ratio on the order of 20 dB for negligible interference.

703.9 Pedestrian signals. Accessible pedestrian signals shall comply with Section 4E.06-Accessible Pedestrian Signals, and Section 4E.09-Accessible Pedestrian Signal Detectors, of the Manual on Uniform Traffic Control Devices listed in Section 105.2.1.

Exception: Pedestrian signals are not required to comply with the requirement for choosing audible tones.

SECTION 704
TELEPHONES

704.1 General. Accessible public telephones shall comply with Section 704.

704.2 Wheelchair accessible telephones. Wheelchair accessible public telephones shall comply with Section 704.2.

Exception: Drive up only public telephones are not required to comply with Section 704.2.

704.2.1 Clear floor space. A clear floor space complying with Section 305 shall be provided. The clear floor space shall not be obstructed by bases, enclosures, or seats.

704.2.1.1 Parallel approach. Where a parallel approach is provided, the distance from the edge of the telephone enclosure to the face of the telephone shall be 10 inches (255 mm) maximum.

704.2.1.2 Forward approach. Where a forward approach is provided, the distance from the front edge of a counter within the enclosure to the face of the telephone shall be 20 inches (510 mm) maximum.

704.2.2 Operable parts. Operable parts shall comply with Section 309. Telephones shall have push button controls where service for such equipment is available.

704.2.3 Telephone directories. Where provided, telephone directories shall comply with Section 309.

704.2.4 Cord length. The telephone handset cord shall be 29 inches (735 mm) minimum in length.

704.2.5 Hearing-aid compatibility. Telephones shall be hearing aid compatible.

704.3 Volume-control telephones. Public telephones required to have volume controls shall be equipped with a receiver volume control that provides a gain adjustable up to 20 dB minimum. Incremental volume controls shall provide at least one intermediate step of gain of 12 dB minimum. An automatic reset shall be provided.

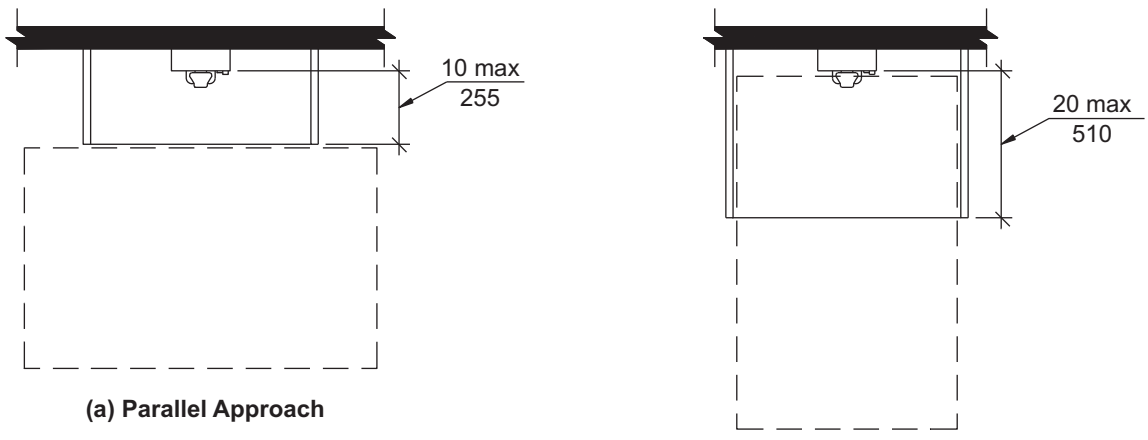

(a) Parallel Approach

(b) Forward Approach

FIGURE 704.2.1
CLEAR FLOOR SPACE FOR TELEPHONES

INTERNATIONAL CODE COUNCIL®
Copyright © 2014 ICC. ALL RIGHTS RESERVED. Accessed by William Munson on Jan 4, 2017 9:33:41 PM pursuant to License Agreement with ICC. No further reproduction or distribution authorized. ANY UNAUTHORIZED REPRODUCTION OR DISTRIBUTION IS A VIOLATION OF THE FEDERAL COPYRIGHT ACT AND THE LICENSE AGREEMENT, AND SUBJECT TO CIVIL AND CRIMINAL PENALTIES THEREUNDER.

704.4 TTY. TTYs required at a public pay telephone shall be permanently affixed within, or adjacent to, the telephone enclosure. Where an acoustic coupler is used, the telephone cord shall be of sufficient length to allow connection of the TTY and the telephone receiver.

704.5 Height. When in use, the touch surface of TTY keypads shall be 34 inches (865 mm) minimum above the floor.

Exception: Where seats are provided, TTYs shall not be required to comply with Section 704.5.

704.6 TTY Shelf. Where public pay telephones designed to accommodate a portable TTY are provided, they shall be equipped with a shelf and an electrical outlet within or adjacent to the telephone enclosure. The telephone handset shall be capable of being placed flush on the surface of the shelf. The shelf shall be capable of accommodating a TTY and shall have a vertical clearance 6 inches (150 mm) minimum in height above the area where the TTY is placed.

704.7 Protruding objects. Telephones, enclosures, and related equipment shall comply with Section 307.

SECTION 705
DETECTABLE WARNINGS

705.1 General. Detectable warning surfaces shall comply with Section 705.

705.2 Standardization. Detectable warning surfaces shall be standard within a building, facility, site, or complex of buildings.

Exception: In facilities that have both interior and exterior locations, detectable warnings in exterior locations shall not be required to comply with Section 705.4.

705.3 Contrast. Detectable warning surfaces shall contrast visually with adjacent surfaces, either light-on-dark or dark-on-light.

705.4 Interior locations. Detectable warning surfaces in interior locations shall differ from adjoining walking surfaces in resiliency or sound-on-cane contact.

705.5 Truncated domes. Detectable warning surfaces shall have truncated domes complying with Section 705.5.

705.5.1 Size. Truncated domes shall have a base diameter of 0.9 inch (23 mm) minimum and 1.4 inch (36 mm) maximum, and a top diameter of 50 percent minimum and 65 percent maximum of the base diameter.

705.5.2 Height. Truncated domes shall have a height of 0.2 inch (5.1 mm).

705.5.3 Spacing. Truncated domes shall have a center-to-center spacing of 1.6 inches (41 mm) minimum and 2.4 inches (61 mm) maximum, and a base-to-base spacing of 0.65 inch (16.5 mm) minimum, measured between the most adjacent domes on the grid.

705.5.4 Alignment. Truncated domes shall be aligned in a square grid pattern.

705.6 Transportation platform edges. Detectable warning surfaces at transportation platform boarding edges shall extend the full length of the public use areas of the platform. The detectable warning surface shall extend 24 inches (610 mm) from the boarding edge of the platform.

SECTION 706
ASSISTIVE LISTENING SYSTEMS

706.1 General. Accessible assistive listening systems in assembly areas shall comply with Section 706.

706.2 Receiver jacks. Receivers required for use with an assistive listening system shall include a $^{1}/_{8}$ inch (3.2 mm) standard mono jack.

706.3 Receiver hearing-aid compatibility. Receivers required to be hearing aid compatible shall interface with telecoils in hearing aids through the provision of neck loops.

706.4 Sound pressure level. Assistive listening systems shall be capable of providing a sound pressure level of 110 dB minimum and 118 dB maximum, with a dynamic range on the volume control of 50 dB.

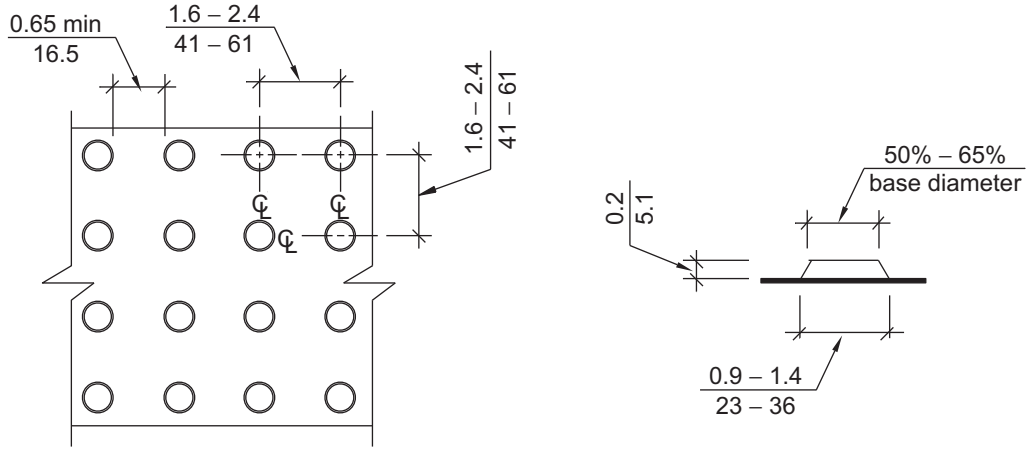

FIGURE 705.5
TRUNCATED DOME SIZE AND SPACING

INTERNATIONAL CODE COUNCIL®
Copyright © 2014 ICC. ALL RIGHTS RESERVED. Accessed by William Munson on Jan 4, 2017 9:33:41 PM pursuant to License Agreement with ICC. No further reproduction or distribution authorized. ANY UNAUTHORIZED REPRODUCTION OR DISTRIBUTION IS A VIOLATION OF THE FEDERAL COPYRIGHT ACT AND THE LICENSE AGREEMENT, AND SUBJECT TO CIVIL AND CRIMINAL PENALTIES THEREUNDER.

706.5 Signal-to-noise ratio. The signal-to-noise ratio for internally generated noise in assistive listening systems shall be 18 dB minimum.

706.6 Peak Clipping level. Peak clipping shall not exceed 18 dB of clipping relative to the peaks of speech.

SECTION 707
AUTOMATIC TELLER MACHINES (ATMS) AND FARE MACHINES

707.1 General. Accessible automatic teller machines and fare machines shall comply with Section 707.

707.2 Clear floor space. A clear floor space complying with Section 305 shall be provided in front of the machine.

Exception: Clearfloor space is not required at drive up only automatic teller machines and fare machines.

707.3 Operable parts. Operable parts shall comply with Section 309. Unless a clear or correct key is provided, each operable part shall be able to be differentiated by sound or touch, without activation.

Exception: Drive up only automatic teller machines and fare machines shall not be required to comply with Section 309.2 or 309.3.

707.4 Privacy. Automatic teller machines shall provide the opportunity for the same degree of privacy of input and output available to all individuals.

707.5 Numeric keys. Numeric keys shall be arranged in a 12-key ascending or descending telephone keypad layout. The number Five key shall have a single raised dot.

707.6 Function keys. Function keys shall comply with Section 707.6.

707.6.1 Raised symbols. Function key surfaces shall have raised symbols as shown in Table 707.6.1.

TABLE 707.6.1
RAISED SYMBOLS

Key Function	Description of Raised Symbol	Raised Symbol
Enter or Proceed:	CIRCLE	◯
Clear or Correct:	LEFT ARROW	←
Cancel:	"X"	X
Add Value:	PLUS SIGN	+
Decreased Value:	MINUS SIGN	-

707.6.2 Contrast. Function keys shall contrast visually from background surfaces. Characters and symbols on key surfaces shall contrast visually from key surfaces. Visual contrast shall be either light-on-dark or dark-on-light.

Exception: Raised symbols required by Section 707.6.1 shall not be required to comply with Section 707.6.2.

707.7 Display screen. The display screen shall comply with Section 707.7.

707.7.1 Visibility. The display screen shall be visible from a point located 40 inches (1015 mm) above the center of the clear floor space in front of the machine.

Exception: Drive up only automatic teller machines and fare machines shall not be required to comply with Section 707.7.1.

707.7.2 Characters. Characters displayed on the screen shall be in a sans serif font. The uppercase letter "I" shall be used to determine the allowable height of all characters of the font. The uppercase letter "I" of the font shall be 3/16 inch (4.8 mm) minimum in height. Characters shall contrast with their background with either light characters on a dark background, or dark characters on a light background.

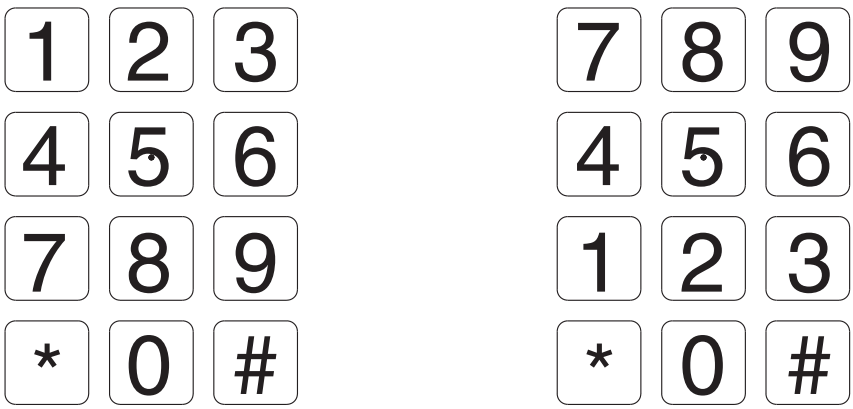

(a) 12-Key Ascending

(b) 12-Key Descending

FIGURE 707.5
NUMERIC KEY LAYOUT

INTERNATIONAL CODE COUNCIL®
Copyright © 2014 ICC. ALL RIGHTS RESERVED. Accessed by William Munson on Jan 4, 2017 9:33:41 PM pursuant to License Agreement with ICC. No further reproduction or distribution authorized. ANY UNAUTHORIZED REPRODUCTION OR DISTRIBUTION IS A VIOLATION OF THE FEDERAL COPYRIGHT ACT AND THE LICENSE AGREEMENT, AND SUBJECT TO CIVIL AND CRIMINAL PENALTIES THEREUNDER.

707.8 Speech output. Machines shall be speech enabled. Operating instructions and orientation, visible transaction prompts, user input verification, error messages, and all displayed information for full use shall be accessible to and independently usable by individuals with vision impairments. Speech shall be delivered through a mechanism that is readily available to all users including, but not limited to, an industry standard connector or a telephone handset. Speech shall be recorded or digitized human, or synthesized.

Exceptions:

1. Audible tones shall be permitted in lieu of speech for visible output that is not displayed for security purposes, including but not limited to, asterisks representing personal identification numbers.
2. Advertisements and other similar information shall not be required to be audible unless they convey information that can be used in the transaction being conducted.
3. Where speech synthesis cannot be supported, dynamic alphabetic output shall not be required to be audible.

707.8.1 User control. Speech shall be capable of being repeated and interrupted by the user. There shall be a volume control for the speech function.

Exception: Speech output for any single function shall be permitted to be automatically interrupted when a transaction is selected.

707.8.2 Receipts. Where receipts are provided, speech output devices shall provide audible balance inquiry information, error messages, and all other information on the printed receipt necessary to complete or verify the transaction.

Exceptions:

1. Machine location, date and time of transaction, customer account number, and the machine identifier shall not be required to be audible.
2. Information on printed receipts that duplicates audible information available on-screen shall not be required to be presented in the form of an audible receipt.
3. Printed copies of bank statements and checks shall not be required to be audible.

707.9 Input controls. At least one tactually discernible input control shall be provided for each function. Where provided, key surfaces not on active areas of display screens shall be raised above surrounding surfaces. Where membrane keys are the only method of input, each shall be tactually discernable from surrounding surfaces and adjacent keys.

707.10 Braille instructions. Braille instructions for initiating the speech mode shall be provided. Braille shall comply with Section 703.4.

SECTION 708
TWO-WAY COMMUNICATION SYSTEMS

708.1 General. Accessible two-way communication systems shall comply with Section 708.

708.2 Audible and visual indicators. The system shall provide both visual and audible signals.

708.3 Handsets. Handset cords, if provided, shall be 29 inches (735 mm) minimum in length.

708.4 Telephone entry systems. Telephone entry systems shall comply with ANSI/DASMA 303 listed in Section 105.2.7.

INTERNATIONAL CODE COUNCIL®
Copyright © 2014 ICC. ALL RIGHTS RESERVED. Accessed by William Munson on Jan 4, 2017 9:33:41 PM pursuant to License Agreement with ICC. No further reproduction or distribution authorized. ANY UNAUTHORIZED REPRODUCTION OR DISTRIBUTION IS A VIOLATION OF THE FEDERAL COPYRIGHT ACT AND THE LICENSE AGREEMENT, AND SUBJECT TO CIVIL AND CRIMINAL PENALTIES THEREUNDER.

INTERNATIONAL CODE COUNCIL®
Copyright © 2014 ICC. ALL RIGHTS RESERVED. Accessed by William Munson on Jan 4, 2017 9:33:41 PM pursuant to License Agreement with ICC. No further reproduction or distribution authorized. ANY UNAUTHORIZED REPRODUCTION OR DISTRIBUTION IS A VIOLATION OF THE FEDERAL COPYRIGHT ACT AND THE LICENSE AGREEMENT, AND SUBJECT TO CIVIL AND CRIMINAL PENALTIES THEREUNDER.

CHAPTER 8
SPECIAL ROOMS AND SPACES

SECTION 801
GENERAL

801.1 Scope. Special rooms and spaces required to be accessible by the scoping provisions adopted by the administrative authority shall comply with the applicable provisions of Chapter 8.

SECTION 802
ASSEMBLY AREAS

802.1 General. Wheelchair spaces and wheel chair space locations in assembly areas with spectator seating shall comply with Section 802. Team and player seating shall comply with Sections 802.2 through 802.6.

802.2 Floor surfaces. The floor surface of wheelchair space locations shall have a slope not steeper than 1:48 and shall comply with Section 302.

802.3 Width. A single wheelchair space shall be 36 inches (915 mm) minimum in width. Where two adjacent wheelchair spaces are provided, each wheelchair space shall be 33 inches (840 mm) minimum in width.

802.4 Depth. Where a wheelchair space can be entered from the front or rear, the wheelchair space shall be 48 inches (1220 mm) minimum in depth. Where a wheelchair space can only be entered from the side, the wheelchair space shall be 60 inches (1525 mm) minimum in depth.

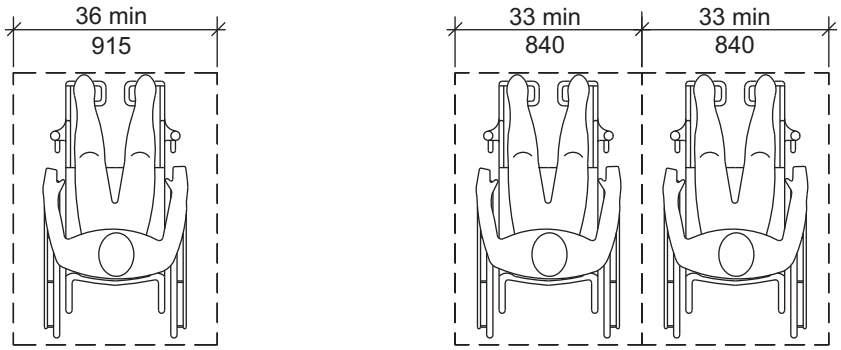

(a) Single Space (b) Multiple Adjacent Spaces

FIGURE 802.3
WIDTH OF A WHEELCHAIR SPACE IN ASSEMBLY AREAS

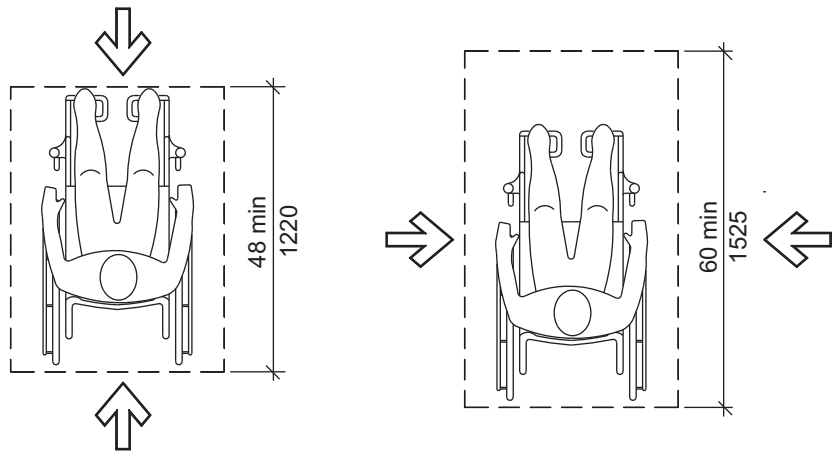

(a) Front or Rear Access (b) Side Access

FIGURE 802.4
DEPTH OF A WHEELCHAIR SPACE IN ASSEMBLY AREAS

INTERNATIONAL CODE COUNCIL®
Copyright © 2014 ICC. ALL RIGHTS RESERVED. Accessed by William Munson on Jan 4, 2017 9:33:41 PM pursuant to License Agreement with ICC. No further reproduction or distribution authorized. ANY UNAUTHORIZED REPRODUCTION OR DISTRIBUTION IS A VIOLATION OF THE FEDERAL COPYRIGHT ACT AND THE LICENSE AGREEMENT, AND SUBJECT TO CIVIL AND CRIMINAL PENALTIES THEREUNDER.

802.5 Approach. The wheelchair space shall adjoin an accessible route. The accessible route shall not overlap the wheelchair space.

802.5.1 Overlap. A wheelchair space shall not overlap the required width of an aisle.

802.6 Integration of wheelchair space locations. Wheelchair space locations shall be an integral part of any seating area.

802.7 Companion seat. A companion seat, complying with Section 802.7, shall be provided beside each wheelchair space.

802.7.1 Companion seat type. The companion seat shall be equivalent in size, quality, comfort and amenities to the seats in the immediate area to the wheelchair space location. Companion seats shall be permitted to be moveable.

802.7.2 Companion seat alignment. In row seating, the companion seat shall be located to provide shoulder alignment with the wheelchair space occupant. The shoulder of the wheelchair space occupant shall be measured either 36 inches (915 mm) from the front or 12 inches (305 mm) from the rear of the wheelchair space. The floor surface for the companion seat shall be at the same elevation as the wheelchair space floor surface.

802.8 Designated aisle seats. Designated aisle seats shall comply with Section 802.8.

802.8.1 Armrests. Where armrests are provided on seating in the immediate area of designated aisle seats, folding or retractable armrests shall be provided on the aisle side of the designated aisle seat.

802.8.2 Identification. Each designated aisle seat shall be identified by the International Symbol of Accessibility.

802.9 Lines of sight. Where spectators are expected to remain seated for purposes of viewing events, spectators in wheelchair space locations shall be provided with a line of sight in accordance with Section 802.9.1. Where spectators in front of the wheelchair space locations will be expected to stand at their seats for purposes of viewing events, spectators in wheelchair space locations shall be provided with a line of sight in accordance with Section 802.9.2.

802.9.1 Line of sight over seated spectators. Where spectators are expected to remain seated during events, spectators seated in a wheelchair space shall be provided with lines of sight to the performance area or playing field comparable to that provided to seated spectators in closest proximity to the wheelchair space location. Where seating provides lines of sight over heads, spectators in wheelchair space locations shall be afforded lines of sight complying with Section 802.9.1.1. Where wheelchair space locations provide lines of sight over the shoulder and between heads, spectators in wheelchair space locations shall be afforded lines of sight complying with Section 802.9.1.2.

802.9.1.1 Lines of sight over heads. Spectators seated in a wheelchair space shall be afforded lines of sight over the heads of seated individuals in the first row in front of the wheelchair space location.

802.9.1.2 Lines of sight between heads. Spectators seated in a wheelchair space shall be afforded lines of sight over the shoulders and between the heads of seated individuals in the first row in front of the wheelchair space location.

802.9.2 Line of sight over standing spectators. Wheelchair spaces required to provide a line of sight over standing spectators shall comply with Section 802.9.2.

802.9.2.1 Distance from adjacent seating. The front of the wheelchair space in a wheelchair space location shall be 12 inches (305 mm) maximum from the back of the chair or bench in front.

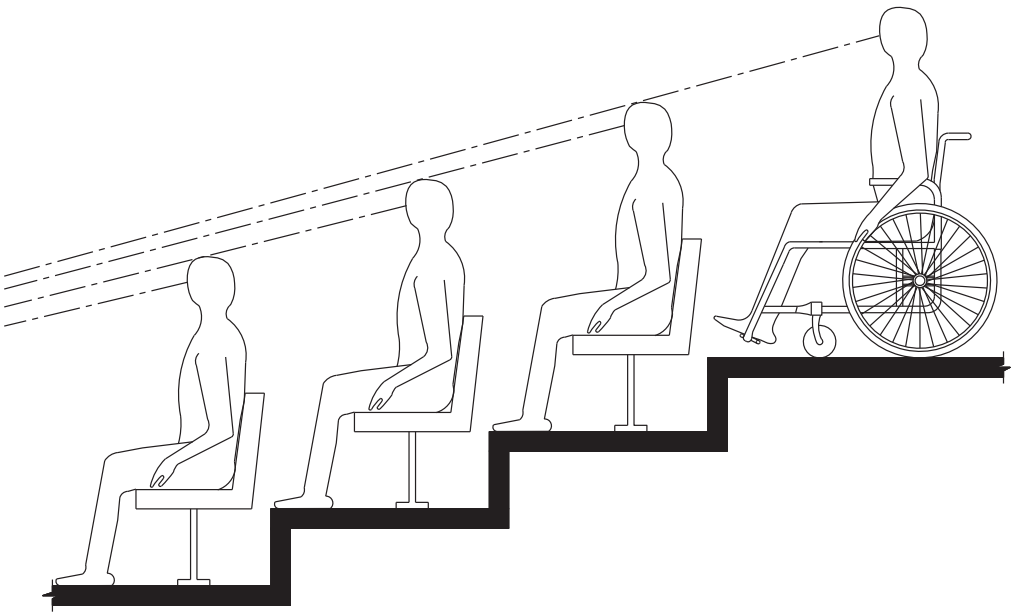

FIGURE 802.9.1.1
LINES OF SIGHT OVER THE HEADS OF SEATED SPECTATORS

INTERNATIONAL CODE COUNCIL®
Copyright © 2014 ICC. ALL RIGHTS RESERVED. Accessed by William Munson on Jan 4, 2017 9:33:41 PM pursuant to License Agreement with ICC. No further reproduction or distribution authorized. ANY UNAUTHORIZED REPRODUCTION OR DISTRIBUTION IS A VIOLATION OF THE FEDERAL COPYRIGHT ACT AND THE LICENSE AGREEMENT, AND SUBJECT TO CIVIL AND CRIMINAL PENALTIES THEREUNDER.

802.9.2.2 Height. The height of the floor surface at the wheelchair space location shall comply with Table 802.9.2.2. Interpolations shall be permitted for riser heights that are not listed in the table.

802.10 Wheelchair space dispersion. The minimum number of wheelchair space locations shall be in accordance with Table 802.10. Wheelchair space locations shall be dispersed in accordance with Sections 802.10.1, 802.10.2 and 802.10.3. In addition, wheelchair space locations shall be dispersed in accordance with Section 802.10.4 in spaces utilized primarily for viewing motion picture projection. Once the required number of wheelchair space locations has been met, further dispersion is not required.

802.10.1 Horizontal dispersion. Wheelchair space locations shall be dispersed horizontally to provide viewing options. Two wheelchair spaces shall be permitted to be located side-by-side.

Exception: Horizontal dispersion shall not be required in assembly areas with 300 or fewer seats if the wheelchair space locations are located within the 2nd and 3rd quartile of the row length. Intermediate aisles shall be included in determining the total row length. If the row

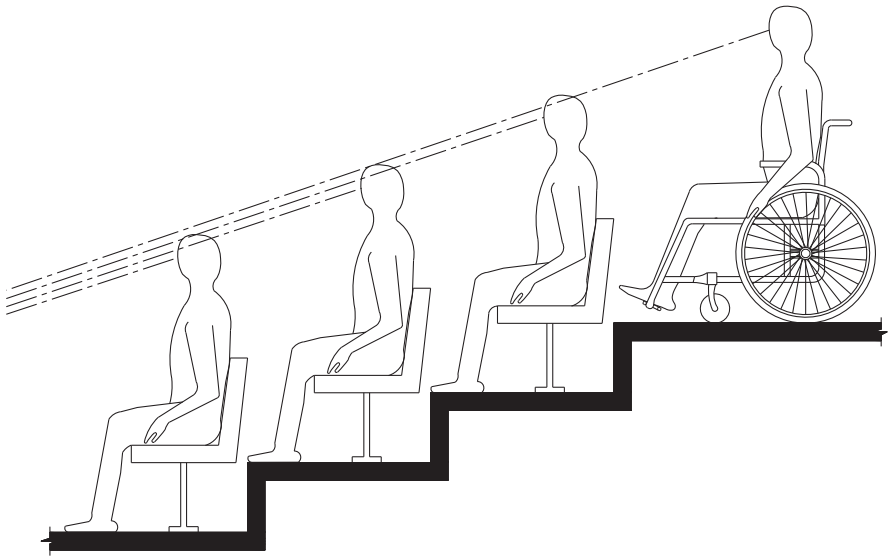

FIGURE 802.9.1.2
LINES OF SIGHT BETWEEN THE HEADS OF SEATED SPECTATORS

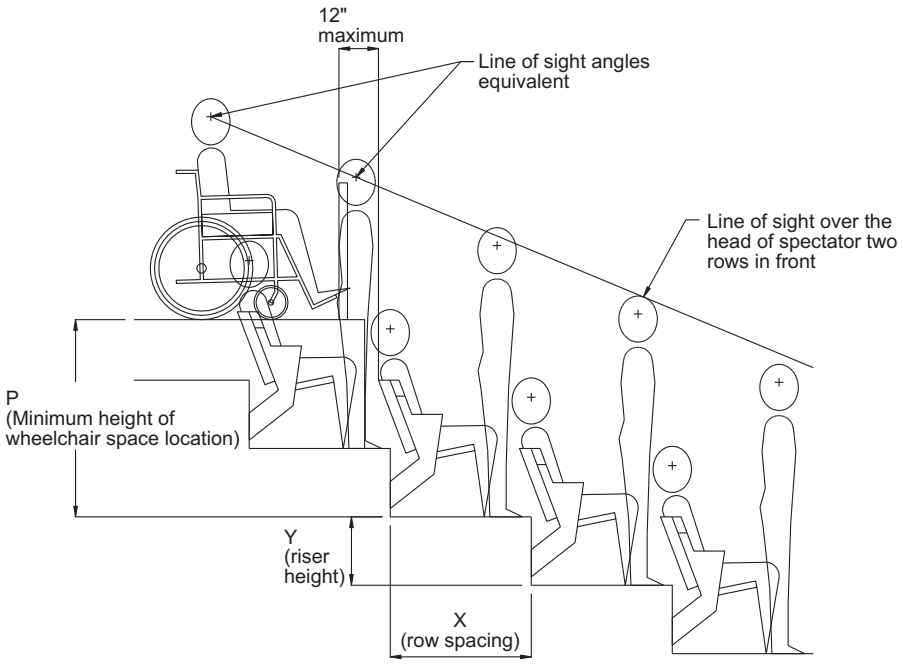

FIGURE 802.9.2
LINE OF SIGHT OVER STANDING SPECTATORS

INTERNATIONAL CODE COUNCIL®
Copyright © 2014 ICC. ALL RIGHTS RESERVED. Accessed by William Munson on Jan 4, 2017 9:33:41 PM pursuant to License Agreement with ICC. No further reproduction or distribution authorized. ANY UNAUTHORIZED REPRODUCTION OR DISTRIBUTION IS A VIOLATION OF THE FEDERAL COPYRIGHT ACT AND THE LICENSE AGREEMENT, AND SUBJECT TO CIVIL AND CRIMINAL PENALTIES THEREUNDER.

length in the 2nd and 3rd quartile of the row is insufficient to accommodate the required number of companion seats and wheelchair spaces, the additional companion seats and wheelchair spaces shall be permitted to extend into in the 1st and 4th quartile of the row.

802.10.2 Dispersion for variety of distances from the event. Wheelchair space locations shall be dispersed at a variety of distances from the event to provide viewing options.

Exceptions:

1. In bleachers, wheelchair space locations provided only in rows at points of entry to bleacher seating shall be permitted.
2. Assembly areas utilized for viewing motion picture projections with 300 seats or less shall not be required to comply with Section 802.10.2.
3. Assembly areas with 300 seats or less other than those utilized for viewing motion picture projections shall not be required to comply with Section 802.10.2 where all wheelchair space locations are within the front 50 percent of the total rows.

802.10.3 Dispersion by type. Where assembly seating has multiple distinct seating areas with amenities that differ from other distinct seating areas, wheelchair space locations shall be provided within each distinct seating area.

802.10.4 Spaces utilized primarily for viewing motion picture projections. In spaces utilized primarily for viewing motion picture projections, wheelchair space locations shall comply with Section 802.10.4.

802.10.4.1 Spaces with seating on risers. Where tiered seating is provided, wheelchair space locations shall be integrated into the tiered seating area.

802.10.4.2 Distance from the screen. Wheelchair space locations shall be located within the rear 60 percent of the seats provided.

TABLE 802.9.2.2
REQUIRED WHEELCHAIR SPACE LOCATION ELEVATION OVER STANDING SPECTATORS

RISER HEIGHT	MINIMUM HEIGHT OF THE WHEELCHAIR SPACE LOCATION BASED ON ROW SPACING[1]		
	Rows less than 33 inches (840 mm)[2]	Rows 33 inches (840 mm) to 44 inches (1120 mm)[2]	Rows over 44 inches (1120 mm)[2]
0 inch (0 mm)	16 inches (405 mm)	16 inches (405 mm)	16 inches (405 mm)
4 inches (100 mm)	22 inches (560 mm)	21 inches (535 mm)	21 inches (535 mm)
8 inches (205 mm)	31 inches (785 mm)	30 inches (760 mm)	28 inches (710 mm)
12 inches (305 mm)	40 inches (1015 mm)	37 inches (940 mm)	35 inches (890 mm)
16 inches (405 mm)	49 inches (1245 mm)	45 inches (1145 mm)	42 inches (1065 mm)
20 inches (510 mm)[3]	58 inches (1475 mm)	53 inches (1345 mm)	49 inches (1245 mm)
24 inches (610 mm)	N/A	61 inches (1550 mm)	56 inches (1420 mm)
28 inches (710 mm)[4]	N/A	69 inches (1750 mm)	63 inches (1600 mm)
32 inches (815 mm)	N/A	N/A	70 inches (1780 mm)
36 inches (915 mm) and higher	N/A	N/A	77 inches (1955 mm)

Footnotes to Table 802.9.2.2

1. The height of the wheelchair space location is the vertical distance from the tread of the row of seats directly in front of the wheelchair space location to the tread of the wheelchair space location.
2. The row spacing is the back-to-back horizontal distance between the rows of seats in front of the wheelchair space location.
3. Seating treads less than 33 inches (840 mm) in depth are not permitted with risers greater than 18 inches (455 mm) in height.
4. Seating treads less than 44 inches (1120 mm) in depth are not permitted with risers greater than 27 inches (685 mm) in height.

NOTE: Table 802.9.2.2 is based on providing a spectator in a wheelchair a line of sight over the head of a spectator two rows in front of the wheelchair space location using average anthropometrical data. The table is based on the following calculation: [(2X+34)(Y-2.25)/X]+(20.2-Y) where Y is the riser height of the rows in front of the wheelchair space location and X is the tread depth of the rows in front of the wheelchair space location. The calculation is based on the front of the wheelchair space location being located 12 inches (305 mm) from the back of the seating tread directly in front and the eye of the standing spectator being set back 8 inches (205 mm) from the riser.

TABLE 802.10
WHEELCHAIR SPACE LOCATION DISPERSION

TOTAL SEATING IN ASSEMBLY AREAS	MINIMUM REQUIRED NUMBER OF WHEELCHAIR SPACE LOCATIONS
Up to 150	1
151 to 500	2
501 to 1000	3
1001 to 5,000	3, plus 1 additional space for each 1,000 seats or portions thereof above 1,000
5,001 and over	7, plus 1 additional space for each 2,000 seats or portions thereof above 5,000

INTERNATIONAL CODE COUNCIL®
Copyright © 2014 ICC. ALL RIGHTS RESERVED. Accessed by William Munson on Jan 4, 2017 9:33:41 PM pursuant to License Agreement with ICC. No further reproduction or distribution authorized. ANY UNAUTHORIZED REPRODUCTION OR DISTRIBUTION IS A VIOLATION OF THE FEDERAL COPYRIGHT ACT AND THE LICENSE AGREEMENT, AND SUBJECT TO CIVIL AND CRIMINAL PENALTIES THEREUNDER.

SECTION 803
DRESSING, FITTING, AND LOCKER ROOMS

803.1 General. Accessible dressing, fitting, and locker rooms shall comply with Section 803.

803.2 Turning space. A turning space complying with Section 304 shall be provided within the room.

803.3 Door swing. Doors shall not swing into the room unless a clear floor space complying with Section 305.3 is provided within the room, beyond the arc of the door swing.

803.4 Benches. A bench complying with Section 903 shall be provided within the room.

803.5 Coat hooks and shelves. Accessible coat hooks provided within the room shall accommodate a forward reach or side reach complying with Section 308. Where provided, a shelf shall be 40 inches (1015 mm) minimum and 48 inches (1220 mm) maximum above the floor.

SECTION 804
KITCHENS AND KITCHENETTES

804.1 General. Accessible kitchens and kitchenettes shall comply with Section 804.

804.2 Clearance. Where a pass-through kitchen is provided, clearances shall comply with Section 804.2.1. Where a U-shaped kitchen is provided, clearances shall comply with Section 804.2.2.

Exception: Spaces that do not provide a cooktop or conventional range shall not be required to comply with Section 804.2 provided there is a 40-inch (1015 mm) minimum clearance between all opposing base cabinets, counter tops, appliances, or walls within work areas.

804.2.1 Pass-through kitchens. In pass-through kitchens where counters, appliances or cabinets are on two opposing sides, or where counters, appliances or cabinets are opposite a parallel wall, clearance between all opposing base cabinets, counter tops, appliances, or walls within kitchen work areas shall be 40 inches (1015 mm) minimum. Pass-through kitchens shall have two entries.

804.2.2 U-shaped kitchens. In kitchens enclosed on three contiguous sides, clearance between all opposing base cabinets, countertops, appliances, or walls within kitchen work areas shall be 60 inches (1525 mm) minimum.

804.3 Work surface. At least one work surface shall be provided in accordance with Section 902.

Exception: Spaces that do not provide a cooktop or conventional range shall not be required to provide an accessible work surface.

804.4 Sinks. The sink shall comply with Section 606.

804.5 Appliances. Where provided, kitchen appliances shall comply with Section 804.5.

804.5.1 Clear floor space. A clear floor space complying with Section 305 shall be provided at each kitchen appliance.

804.5.2 Operable parts. All appliance controls shall comply with Section 309.

Exceptions:

1. Appliance doors and door latching devices shall not be required to comply with Section 309.4.
2. Bottom-hinged appliance doors, when in the open position, shall not be required to comply with Section 309.3.

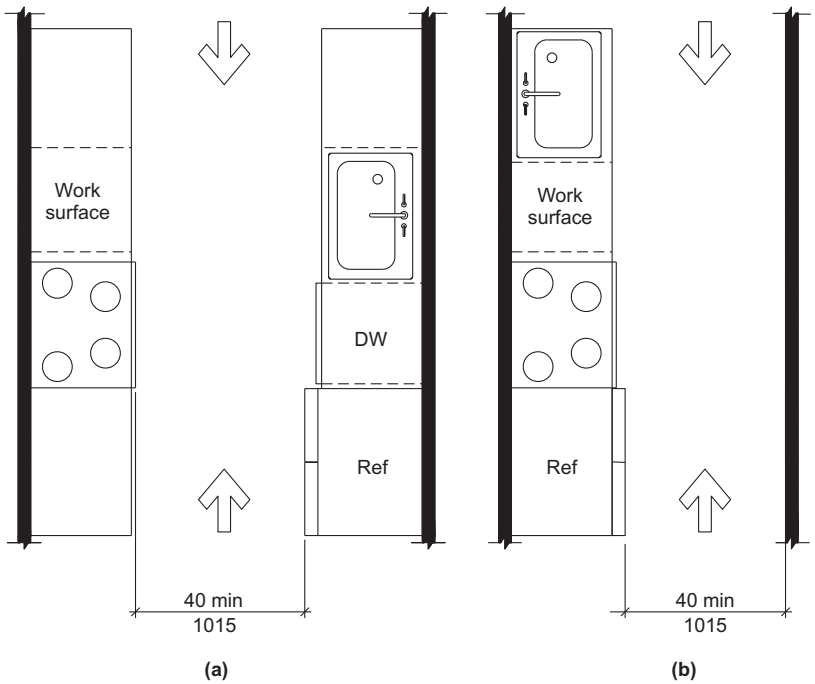

FIGURE 804.2.1
PASS-THROUGH KITCHEN CLEARANCE

INTERNATIONAL CODE COUNCIL®
Copyright © 2014 ICC. ALL RIGHTS RESERVED. Accessed by William Munson on Jan 4, 2017 9:33:41 PM pursuant to License Agreement with ICC. No further reproduction or distribution authorized. ANY UNAUTHORIZED REPRODUCTION OR DISTRIBUTION IS A VIOLATION OF THE FEDERAL COPYRIGHT ACT AND THE LICENSE AGREEMENT, AND SUBJECT TO CIVIL AND CRIMINAL PENALTIES THEREUNDER.

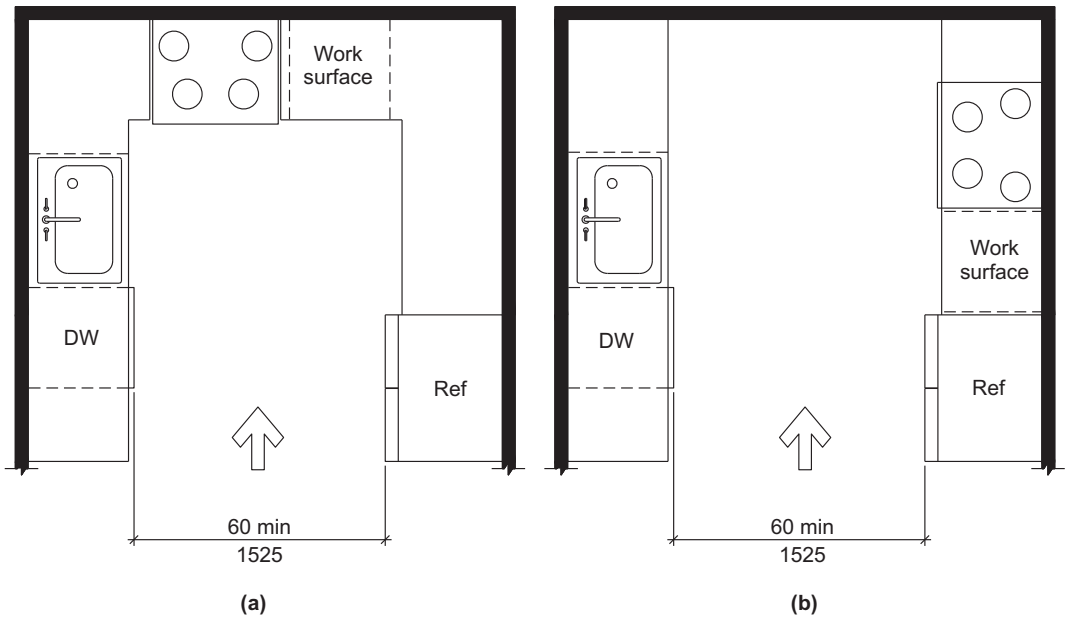

FIGURE 804.2.2
U-SHAPED KITCHEN CLEARANCE

804.5.3 Dishwasher. A clear floor space positioned adjacent to the dishwasher door, shall be provided. The dishwasher door in the open position shall not obstruct the clear floor space for the dishwasher or an adjacent sink.

804.5.4 Cooktop. Cooktops shall comply with Section 804.5.4.

804.5.4.1 Approach. A clear floor space, positioned for a parallel or forward approach to the cooktop, shall be provided.

804.5.4.2 Forward approach. Where the clear floor space is positioned for a forward approach, knee and toe clearance complying with Section 306 shall be provided. The underside of the cooktop shall be insulated or otherwise configured to prevent burns, abrasions, or electrical shock.

804.5.4.3 Parallel approach. Where the clear floor space is positioned for a parallel approach, the clear floor space shall be centered on the appliance.

804.5.4.4 Controls. The location of controls shall not require reaching across burners.

804.5.5 Oven. Ovens shall comply with Section 804.5.5.

804.5.5.1 Clear floor space. A clear floor space shall be provided. The oven door in the open position shall not obstruct the clear floor space for the oven.

804.5.5.2 Side-hinged door ovens. Side-hinged door ovens shall have a work surface complying with Section 804.3 positioned adjacent to the latch side of the oven door.

804.5.5.3 Bottom-hinged door ovens. Bottom-hinged door ovens shall have a work surface complying with Section 804.3 positioned adjacent to one side of the door.

804.5.5.4 Controls. The location of controls shall not require reaching across burners.

804.5.6 Refrigerator/freezer. Combination refrigerators and freezers shall have at least 50 percent of the freezer compartment shelves, including the bottom of the freezer, 54 inches (1370 mm) maximum above the floor when the shelves are installed at the maximum heights possible in the compartment. A clear floor space, positioned for a parallel approach to the refrigerator/freezer, shall be provided. The centerline of the clear floor space shall be offset 24 inches (610 mm) maximum from the centerline of the appliance.

SECTION 805
TRANSPORTATION FACILITIES

805.1 General. Transportation facilities shall comply with Section 805.

805.2 Bus boarding and alighting areas. Bus boarding and alighting areas shall comply with Section 805.2.

805.2.1 Surface. Bus stop boarding and alighting areas shall have a firm, stable surface.

805.2.2 Dimensions. Bus stop boarding and alighting areas shall have a 96-inch (2440 mm) minimum clear length, measured perpendicular to the curb or vehicle roadway edge, and a 60-inch (1525 mm) minimum clear width, measured parallel to the vehicle roadway.

805.2.3 Slope. The slope of the bus stop boarding and alighting area parallel to the vehicle roadway shall be the same as the roadway, to the maximum extent practicable. The slope of the bus stop boarding and alighting area perpendicular to the vehicle roadway shall be 1:48 maximum.

INTERNATIONAL CODE COUNCIL®
Copyright © 2014 ICC. ALL RIGHTS RESERVED. Accessed by William Munson on Jan 4, 2017 9:33:41 PM pursuant to License Agreement with ICC. No further reproduction or distribution authorized. ANY UNAUTHORIZED REPRODUCTION OR DISTRIBUTION IS A VIOLATION OF THE FEDERAL COPYRIGHT ACT AND THE LICENSE AGREEMENT, AND SUBJECT TO CIVIL AND CRIMINAL PENALTIES THEREUNDER.

805.2.4 Connection. Bus stop boarding and alighting areas shall be connected to streets, sidewalks, or pedestrian paths by an accessible route complying with Section 402.

805.3 Bus shelters. Bus shelters shall provide a minimum clear floor space complying with Section 305 entirely within the shelter. Bus shelters shall be connected by an accessible route complying with Section 402 to a boarding and alighting area complying with Section 805.2.

805.4 Bus signs. Bus route identification signs shall have visual characters complying with Sections 703.2.2, 703.2.3, and 703.2.5 through 703.2.8. In addition, bus route identification numbers shall be visual characters complying with Section 703.2.4.

Exception: Bus schedules, timetables and maps that are posted at the bus stop or bus bay shall not be required to comply with Section 805.4.

805.5 Rail platforms. Rail platforms shall comply with Section 805.5.

805.5.1 Slope. Rail platforms shall not exceed a slope of 1:48 in all directions.

Exception: Where platforms serve vehicles operating on existing track or track laid in existing roadway, the

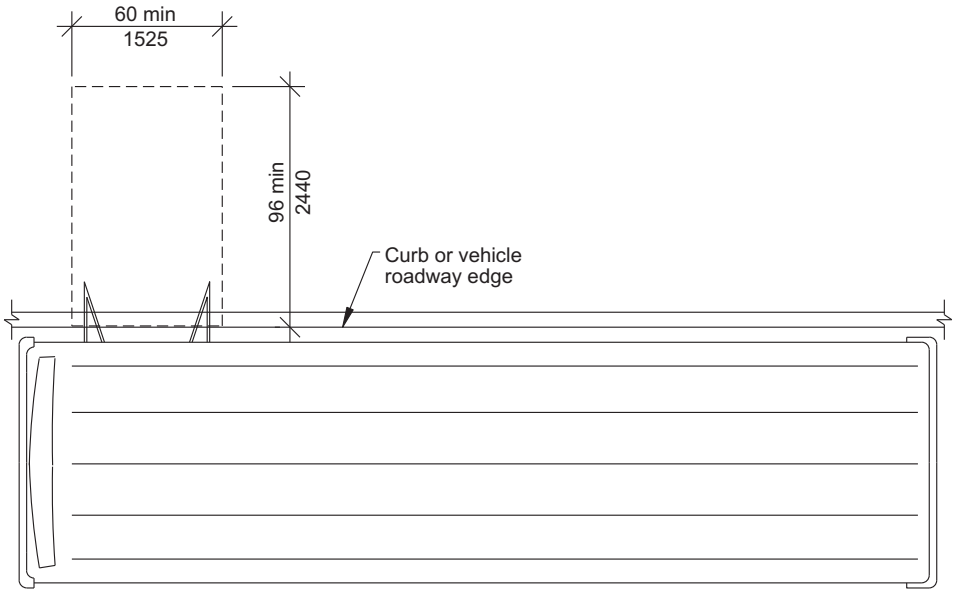

FIGURE 805.2.2
SIZE OF BUS BOARDING AND ALIGHTING AREAS

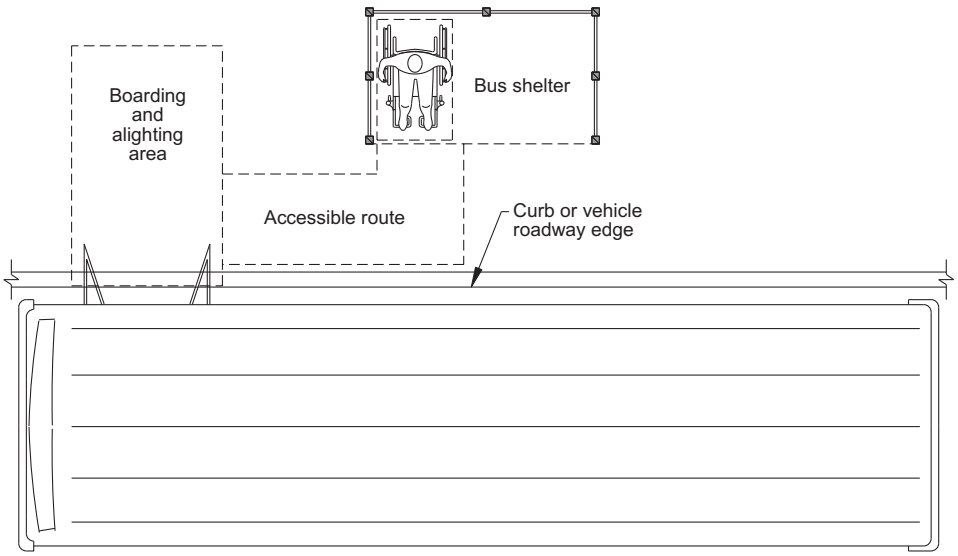

FIGURE 805.3
BUS SHELTERS

INTERNATIONAL CODE COUNCIL®
Copyright © 2014 ICC. ALL RIGHTS RESERVED. Accessed by William Munson on Jan 4, 2017 9:33:41 PM pursuant to License Agreement with ICC. No further reproduction or distribution authorized. ANY UNAUTHORIZED REPRODUCTION OR DISTRIBUTION IS A VIOLATION OF THE FEDERAL COPYRIGHT ACT AND THE LICENSE AGREEMENT, AND SUBJECT TO CIVIL AND CRIMINAL PENALTIES THEREUNDER.

slope of the platform parallel to the track shall be permitted to be equal to the slope (grade) of the roadway or existing track.

805.5.2 Detectable warnings. Platform boarding edges not protected by platform screens or guards shall have a detectable warning complying with Section 705.

805.6 Rail station signs. Rail station signs shall comply with Section 805.6.

Exception: Signs shall not be required to comply with Sections 805.6.1 and 805.6.2 where audible signs are remotely transmitted to hand-held receivers, or are user- or proximity-actuated.

805.6.1 Entrances. Where signs identify a station or a station entrance, at least one sign with raised characters and braille complying with Sections 703.3 and 703.4 shall be provided at each entrance.

805.6.2 Routes and destinations. Lists of stations, routes and destinations served by the station that are located on boarding areas, platforms, or mezzanines shall have visual characters complying with Section 703.2. A minimum of one sign with raised characters and braille complying with Sections 703.3 and 703.4 shall be provided on each platform or boarding area to identify the specific station.

Exception: Where sign space is limited, characters shall not be required to exceed 3 inches (75 mm) in height.

805.6.3 Station names. Stations covered by this section shall have identification signs with visual characters complying with Section 703.2. The signs shall be clearly visible and within the sight lines of a standing or sitting passenger from within the vehicle on both sides when not obstructed by another vehicle.

805.7 Public address systems. Where public address systems convey audible information to the public, the same or equivalent information shall be provided in a visual format.

805.8 Clocks. Where clocks are provided for use by the public, the clock face shall be uncluttered so that its elements are clearly visible. Hands, numerals and digits shall contrast with the background either light-on-dark or dark-on-light. Where clocks are installed overhead, numerals and digits shall be visual characters complying with Section 703.2.

MNMNMN **805.9 Escalators.** Where provided, escalators shall comply with Minnesota Rules, Chapter 1307, Minnesota Elevators and Related Devices.

805.10 Track crossings. Where a circulation path crosses tracks, it shall comply with Section 402 and shall have a detectable warning 24 inches (610 mm) in depth complying with Section 705 extending the full width of the circulation path. The detectable warning surface shall be located so that the edge nearest the rail crossing is 6 foot (1830 mm) minimum and 15 foot (4570 mm) maximum from the centerline of the nearest rail.

Exception: Openings for wheel flanges shall be permitted to be $2^1/_2$ inches (64 mm) maximum.

SECTION 806
HOLDING CELLS AND HOUSING CELLS

806.1 General. Holding cells and housing cells shall comply with Section 806.

806.2 Features for people using wheelchairs or other mobility aids. Cells required to have features for people using wheelchairs or other mobility aids shall comply with Section 806.2.

806.2.1 Turning space. Turning space complying with Section 304 shall be provided within the cell.

806.2.2 Benches. Where benches are provided, at least one bench shall comply with Section 903.

806.2.3 Beds. Where beds are provided, clear floor space complying with Section 305 shall be provided on at least one side of the bed. The clear floor space shall be positioned for parallel approach to the side of the bed.

806.2.4 Toilet and bathing facilities. Toilet facilities or bathing facilities provided as part of a cell shall comply with Section 603.

806.3 Communication features. Cells required to have communication features shall comply with Section 806.3.

806.3.1 Alarms. Where audible emergency alarm systems are provided to serve the occupants of cells, visible alarms complying with Section 702 shall be provided.

Exception: In cells where inmates or detainees are not allowed independent means of egress, visible alarms shall not be required.

806.3.2 Telephones. Where provided, telephones within cells shall have volume controls complying with Section 704.3.

FIGURE 805.10
TRACK CROSSINGS

INTERNATIONAL CODE COUNCIL®
Copyright © 2014 ICC. ALL RIGHTS RESERVED. Accessed by William Munson on Jan 4, 2017 9:33:41 PM pursuant to License Agreement with ICC. No further reproduction or distribution authorized. ANY UNAUTHORIZED REPRODUCTION OR DISTRIBUTION IS A VIOLATION OF THE FEDERAL COPYRIGHT ACT AND THE LICENSE AGREEMENT, AND SUBJECT TO CIVIL AND CRIMINAL PENALTIES THEREUNDER.

SECTION 807
COURTROOMS

807.1 General. Courtrooms shall comply with Section 807.

807.2 Turning space. Where provided, each area that is raised or depressed shall provide a turning space complying with Section 304.

Exception: Levels of jury boxes not required to be accessible are not required to comply with Section 807.2.

807.3 Clear floor space. Within the defined area of each jury box and witness stand, a clear floor space complying with Section 305 shall be provided.

Exception: In alterations, wheelchair spaces are not required to be located within the defined area of raised jury boxes or witness stands and shall be permitted to be located outside these spaces where ramps or platform lifts restrict or project into the means of egress required by the administrative authority.

807.4 Courtroom stations. Judges' benches, clerks' stations, bailiffs' stations, deputy clerks' stations, court reporters' stations and litigants' and counsel stations shall comply with Section 902.

807.5 Gallery seating. Gallery seating shall comply with Section 802.

INTERNATIONAL CODE COUNCIL®
Copyright © 2014 ICC. ALL RIGHTS RESERVED. Accessed by William Munson on Jan 4, 2017 9:33:41 PM pursuant to License Agreement with ICC. No further reproduction or distribution authorized. ANY UNAUTHORIZED REPRODUCTION OR DISTRIBUTION IS A VIOLATION OF THE FEDERAL COPYRIGHT ACT AND THE LICENSE AGREEMENT, AND SUBJECT TO CIVIL AND CRIMINAL PENALTIES THEREUNDER.

INTERNATIONAL CODE COUNCIL®
Copyright © 2014 ICC. ALL RIGHTS RESERVED. Accessed by William Munson on Jan 4, 2017 9:33:41 PM pursuant to License Agreement with ICC. No further reproduction or distribution authorized. ANY UNAUTHORIZED REPRODUCTION OR DISTRIBUTION IS A VIOLATION OF THE FEDERAL COPYRIGHT ACT AND THE LICENSE AGREEMENT, AND SUBJECT TO CIVIL AND CRIMINAL PENALTIES THEREUNDER.

CHAPTER 9
BUILT-IN FURNISHINGS AND EQUIPMENT

SECTION 901
GENERAL

901.1 Scope. Built-in furnishings and equipment required to be accessible by the scoping provisions adopted by the administrative authority shall comply with the applicable provisions of Chapter 9.

SECTION 902
DINING SURFACES AND WORK SURFACES

902.1 General. Accessible dining surfaces and work surfaces shall comply with Section 902.

Exception: Dining surfaces and work surfaces primarily for children's use shall be permitted to comply with Section 902.5.

902.2 Clear floor space. A clear floor space complying with Section 305, positioned for a forward approach, shall be provided. Knee and toe clearance complying with Section 306 shall be provided.

Exceptions:

1. At drink surfaces 12 inches (305 mm) or less in depth, knee and toe space shall not be required to extend beneath the surface beyond the depth of the drink surface provided.
2. Dining surfaces that are 15 inches (380 mm) minimum and 24 inches (610 mm) maximum in height are permitted to have a clear floor space complying with Section 305 positioned for a parallel approach.

902.3 Exposed surfaces. There shall be no sharp or abrasive surfaces under the exposed portions of dining surfaces and work surfaces.

902.4 Height. The tops of dining surfaces and work surfaces shall be 28 inches (710 mm) minimum and 34 inches (865 mm) maximum in height above the floor.

902.5 Dining surfaces and work surfaces for children's use. Accessible dining surfaces and work surfaces primarily for children's use shall comply with Section 902.5.

Exception: Dining surfaces and work surfaces used primarily by children ages 5 and younger shall not be required to comply with Section 902.5 where a clear floor space complying with Section 305 is provided and is positioned for a parallel approach.

902.5.1 Clear floor space. A clear floor space complying with Section 305, positioned for forward approach, shall be provided. Knee and toe clearance complying with Section 306 shall be provided.

Exception: A knee clearance of 24 inches (610 mm) minimum above the floor shall be permitted.

902.5.2 Height. The tops of tables and counters shall be 26 inches (660 mm) minimum and 30 inches (760 mm) maximum above the floor.

SECTION 903
BENCHES

903.1 General. Accessible benches shall comply with Section 903.

903.2 Clear floor space. A clear floor space complying with Section 305, positioned for parallel approach to the bench seat, shall be provided.

903.3 Size. Benches shall have seats 42 inches (1065 mm) minimum in length, and 20 inches (510 mm) minimum and 24 inches (610 mm) maximum in depth.

903.4 Back support. The bench shall provide for back support or shall be affixed to a wall. Back support shall be 42 inches (1065 mm) minimum in length and shall extend from a point 2 inches (51 mm) maximum above the seat surface to a point 18 inches (455 mm) minimum above the seat surface. Back support shall be $2^{1}/_{2}$ inches (64 mm) maximum from the rear edge of the seat measured horizontally.

903.5 Height. The top of the bench seat shall be 17 inches (430 mm) minimum and 19 inches (485 mm) maximum above the floor, measured to the top of the seat.

Exception: Benches primarily for children's use shall be permitted to be 11 inches (280 mm) minimum and 17 inches (430 mm) maximum above the floor, measured to the top of the seat.

903.6 Structural strength. Allowable stresses shall not be exceeded for materials used where a vertical or horizontal force of 250 pounds (1112 N) is applied at any point on the seat, fastener mounting device, or supporting structure.

903.7 Wet locations. Where provided in wet locations the surface of the seat shall be slip resistant and shall not accumulate water.

SECTION 904
SALES AND SERVICE COUNTERS

904.1 General. Accessible sales and service counters and windows shall comply with Section 904 as applicable.

Exception: Drive up only sales or service counters and windows are not required to comply with Section 904.

904.2 Approach. All portions of counters required to be accessible shall be located where transactions or services are customarily provided and be adjacent to a walking surface complying with Section 403.

904.3 Sales and service counters. Sales and service counters shall comply with Section 904.3.1 or 904.3.2. The accessible

INTERNATIONAL CODE COUNCIL®
Copyright © 2014 ICC. ALL RIGHTS RESERVED. Accessed by William Munson on Jan 4, 2017 9:33:41 PM pursuant to License Agreement with ICC. No further reproduction or distribution authorized. ANY UNAUTHORIZED REPRODUCTION OR DISTRIBUTION IS A VIOLATION OF THE FEDERAL COPYRIGHT ACT AND THE LICENSE AGREEMENT, AND SUBJECT TO CIVIL AND CRIMINAL PENALTIES THEREUNDER.

portion of the countertop shall extend the same depth as the sales and service countertop.

904.3.1 Parallel approach. A portion of the counter surface 36 inches (915 mm) minimum in length and 36 inches (915 mm) maximum in height above the floor shall be provided. Where the counter surface is less than 36 inches (915 mm) in length, the entire counter surface shall be 36 inches (915 mm) maximum in height above the floor. A clear floor space complying with Section 305, positioned for a parallel approach adjacent to the accessible counter, shall be provided.

904.3.2 Forward approach. A portion of the counter surface 30 inches (760 mm) minimum in length and 36 inches (915 mm) maximum in height above the floor shall be provided. A clear floor space complying with Section 305, positioned for a forward approach to the accessible counter, shall be provided. Knee and toe clearance complying with Section 306 shall be provided under the accessible counter.

904.4 Checkout aisles. Checkout aisles shall comply with Section 904.4.

904.4.1 Aisle. Aisles shall comply with Section 403.

904.4.2 Counters. The checkout counter surface shall be 38 inches (965 mm) maximum in height above the floor. The top of the counter edge protection shall be 2 inches (51 mm) maximum above the top of the counter surface on the aisle side of the checkout counter.

904.4.3 Check writing surfaces. Where provided, check writing surfaces shall comply with Section 902.4.

904.5 Food service lines. Counters in food service lines shall comply with Section 904.5.

904.5.1 Self-Service shelves and dispensing devices. Self-service shelves and dispensing devices for tableware, dishware, condiments, food and beverages shall comply with Section 308.

904.5.2 Tray slides. The tops of tray slides shall be 28 inches (710 mm) minimum and 34 inches (865 mm) maximum above the floor.

904.6 Security glazing. Where counters or teller windows have security glazing to separate personnel from the public, a method to facilitate voice communication shall be provided. Telephone handset devices, if provided, shall comply with Section 704.3.

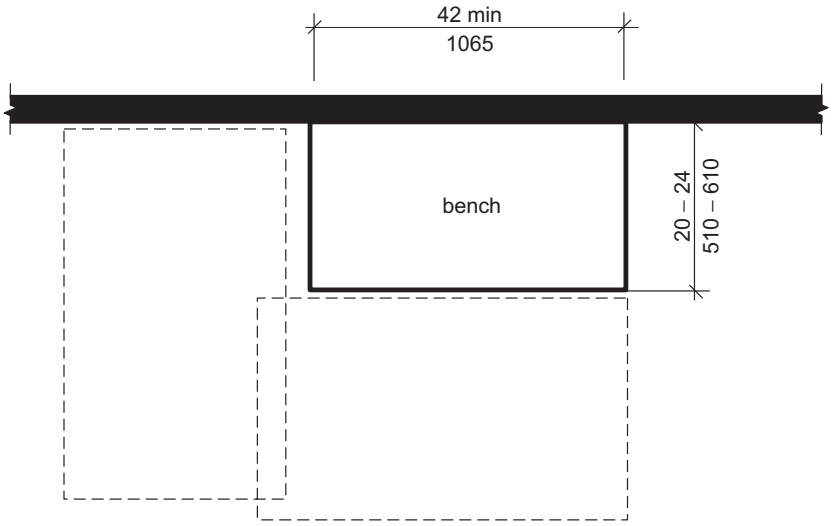

(a) Bench Size and Options for Clear Floor Space

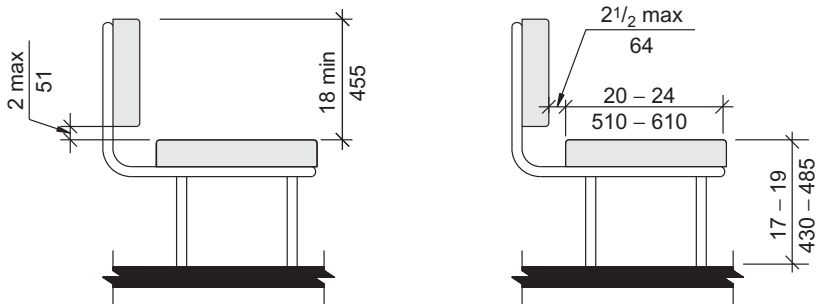

(b) Bench Back Support and Seat Height

FIGURE 903
BENCHES

INTERNATIONAL CODE COUNCIL®
Copyright © 2014 ICC. ALL RIGHTS RESERVED. Accessed by William Munson on Jan 4, 2017 9:33:41 PM pursuant to License Agreement with ICC. No further reproduction or distribution authorized. ANY UNAUTHORIZED REPRODUCTION OR DISTRIBUTION IS A VIOLATION OF THE FEDERAL COPYRIGHT ACT AND THE LICENSE AGREEMENT, AND SUBJECT TO CIVIL AND CRIMINAL PENALTIES THEREUNDER.

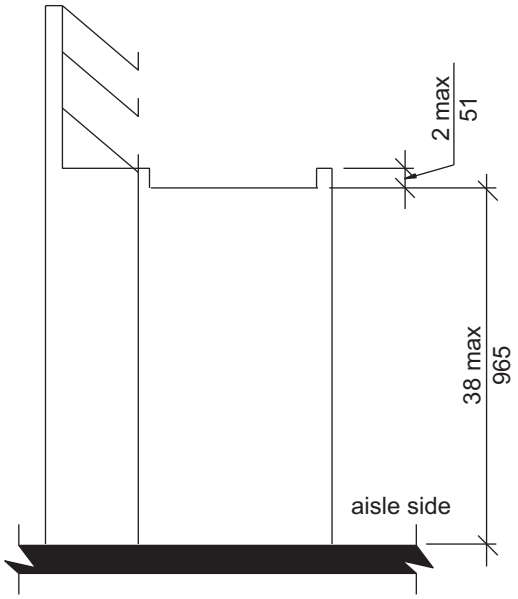

FIGURE 904.4.2
HEIGHT OF CHECKOUT COUNTERS

SECTION 905
STORAGE FACILITIES

905.1 General. Accessible storage facilities shall comply with Section 905.

905.2 Clear floor space. A clear floor space complying with Section 305 shall be provided.

905.3 Height. Accessible storage elements shall comply with at least one of the reach ranges specified in Section 308.

905.4 Operable parts. Operable parts of storage facilities shall comply with Section 309.

INTERNATIONAL CODE COUNCIL®
Copyright © 2014 ICC. ALL RIGHTS RESERVED. Accessed by William Munson on Jan 4, 2017 9:33:41 PM pursuant to License Agreement with ICC. No further reproduction or distribution authorized. ANY UNAUTHORIZED REPRODUCTION OR DISTRIBUTION IS A VIOLATION OF THE FEDERAL COPYRIGHT ACT AND THE LICENSE AGREEMENT, AND SUBJECT TO CIVIL AND CRIMINAL PENALTIES THEREUNDER.

INTERNATIONAL CODE COUNCIL®
Copyright © 2014 ICC. ALL RIGHTS RESERVED. Accessed by William Munson on Jan 4, 2017 9:33:41 PM pursuant to License Agreement with ICC. No further reproduction or distribution authorized. ANY UNAUTHORIZED REPRODUCTION OR DISTRIBUTION IS A VIOLATION OF THE FEDERAL COPYRIGHT ACT AND THE LICENSE AGREEMENT, AND SUBJECT TO CIVIL AND CRIMINAL PENALTIES THEREUNDER.

CHAPTER 10

DWELLING UNITS AND SLEEPING UNITS

SECTION 1001
GENERAL

1001.1 Scoping. Dwelling units and sleeping units required to be Accessible units, Type A units, Type B units, Type C (Visitable) units or units with accessible communication features by the scoping provisions adopted by the administrative authority shall comply with the applicable provisions of Chapter 10.

SECTION 1002
ACCESSIBLE UNITS

1002.1 General. Accessible units shall comply with Section 1002.

1002.2 Primary entrance. The accessible primary entrance shall be on an accessible route from public and common areas. The primary entrance shall not be to a bedroom unless it is the only entrance.

1002.3 Accessible route. Accessible routes within Accessible units shall comply with Section 1002.3.

1002.3.1 Location. At least one accessible route shall connect all spaces and elements that are a part of the unit. Accessible routes shall coincide with or be located in the same area as a general circulation path.

Exception: An accessible route is not required to unfinished attics and unfinished basements that are part of the unit.

1002.3.2 Turning space. All rooms served by an accessible route shall provide a turning space complying with Section 304.

Exceptions:

1. A turning space shall not be required in toilet rooms and bathrooms that are not required to comply with Section 1002.11.2.
2. A turning space is not required within closets or pantries that are 48 inches (1220 mm) maximum in depth.

1002.3.3 Components. Accessible routes shall consist of one or more of the following elements: walking surfaces with a slope not steeper than 1:20, doors and doorways, ramps, elevators, and platform lifts.

1002.4 Walking surfaces. Walking surfaces that are part of an accessible route shall comply with Section 403.

1002.5 Doors and doorways. The primary entrance door to the unit, and all other doorways intended for user passage, shall comply with Section 404.

Exceptions:

1. Existing doors to hospital patient sleeping rooms shall be exempt from the requirement for space at the latch side provided the door is 44 inches (1120 mm) minimum in width.
2. In toilet rooms and bathrooms not required to comply with Section 1002.11.2, maneuvering clearances required by Section 404.2.3 are not required on the toilet room or bathroom side of the door.
3. A turning space between doors in a series as required by Section 404.2.5 is not required.
4. Storm and screen doors are not required to comply with Section 404.2.5.
5. Communicating doors between individual sleeping units are not required to comply with Section 404.2.5.
6. At other than the primary entrance door, where exterior space dimensions of balconies are less than the required maneuvering clearance, door maneuvering clearance is not required on the exterior side of the door.

1002.6 Ramps. Ramps shall comply with Section 405.

1002.7 Elevators. Elevators within the unit shall comply with Section 407, 408, or 409.

1002.8 Platform lifts. Platform lifts within the unit shall comply with Section 410.

1002.9 Operable parts. Lighting controls, electrical panelboards, electrical switches and receptacle outlets, environmental controls, appliance controls, operating hardware for operable windows, plumbing fixture controls, and user controls for security or intercom systems shall comply with Section 309.

Exceptions:

1. Receptacle outlets serving a dedicated use.
2. Where two or more receptacle outlets are provided in a kitchen above a length of counter top that is uninterrupted by a sink or appliance, one receptacle outlet shall not be required to comply with 309.
3. Floor receptacle outlets.
4. HVAC diffusers.
5. Controls mounted on ceiling fans.
6. Where redundant controls other than light switches are provided for a single element, one control in each space shall not be required to be accessible.
7. Reset buttons and shut-offs serving appliances, piping and plumbing fixtures.
8. Electrical panelboards shall not be required to comply with Section 309.4.

1002.10 Laundry equipment. Washing machines and clothes dryers shall comply with Section 611.

INTERNATIONAL CODE COUNCIL®
Copyright © 2014 ICC. ALL RIGHTS RESERVED. Accessed by William Munson on Jan 4, 2017 9:33:41 PM pursuant to License Agreement with ICC. No further reproduction or distribution authorized. ANY UNAUTHORIZED REPRODUCTION OR DISTRIBUTION IS A VIOLATION OF THE FEDERAL COPYRIGHT ACT AND THE LICENSE AGREEMENT, AND SUBJECT TO CIVIL AND CRIMINAL PENALTIES THEREUNDER.

1002.11 Toilet and bathing facilities. At least one toilet and bathing facility shall comply with Section 1002.11.2. All other toilet and bathing facilities shall comply with Section 1002.11.1

1002.11.1 Grab bars and shower seat reinforcement. At fixtures in toilet and bathing facilities not required to comply with Section 1002.11.2, reinforcement in accordance with Section 1004.11.1 shall be provided.

Exception: Reinforcement is not required where Type B units are not provided in the structure.

1002.11.2 Accessible toilet and bathing facility. At least one toilet and bathing facility shall comply with Section 603. At least one lavatory, one water closet and either a bathtub or shower within the unit shall comply with Sections 604 through 610. The accessible toilet and bathing fixtures shall be in a single toilet/bathing area, such that travel between fixtures does not require travel through other parts of the unit.

1002.11.2.1 Vanity counter top space. If vanity counter top space is provided in dwelling or sleeping units not required to be Accessible units within the same facility, equivalent vanity counter top space, in terms of size and proximity to the lavatory, shall also be provided in Accessible units.

1002.11.2.2 Mirrors. Mirrors above accessible lavatories shall have the bottom edge of the reflecting surface 40 inches (1015 mm) maximum above the floor.

1002.12 Kitchens and kitchenettes. Kitchens and kitchenettes shall comply with Section 804. At least one work surface, 30 inches (760 mm) minimum in length, shall comply with Section 902.

Exception: Spaces that do not provide a cooktop or conventional range shall not be required to provide an accessible work surface.

1002.13 Windows. Windows shall comply with Section 1002.13.

1002.13.1 Natural ventilation. Operable windows required to provide natural ventilation shall comply with Sections 309.2 and 309.3.

1002.13.2 Emergency escape. Operable windows required to provide an emergency escape and rescue opening shall comply with Section 309.2.

1002.14 Storage facilities. Where storage facilities are provided, at least one of each type shall comply with Section 905.

Exception: Kitchen cabinets shall not be required to comply with Section 1002.14.

1002.15 Beds. In at least one sleeping area, a minimum of five percent, but not less than one bed shall comply with Section 1002.15.

1002.15.1 Clear floor space. A clear floor space complying with Section 305 shall be provided on both sides of the bed. The clear floor space shall be positioned for parallel approach to the side of the bed.

Exception: Where a single clear floor space complying with Section 305 positioned for parallel approach is provided between two beds, a clear floor space shall not be required on both sides of the bed.

1002.15.2 Bed frames. At least one bed shall be provided with an open bed frame.

SECTION 1003
TYPE A UNITS

1003.1 General. Type A units shall comply with Section 1003.

1003.2 Primary entrance. The accessible primary entrance shall be on an accessible route from public and common areas. The primary entrance shall not be to a bedroom unless it is the only entrance.

1003.3 Accessible route. Accessible routes within Type A units shall comply with Section 1003.3.

1003.3.1 Location. At least one accessible route shall connect all spaces and elements that are a part of the unit. Accessible routes shall coincide with or be located in the same area as a general circulation path.

Exception: An accessible route is not required to unfinished attics and unfinished basements that are part of the unit.

1003.3.2 Turning space. All rooms served by an accessible route shall provide a turning space complying with Section 304.

Exceptions:

1. A turning space is not required in toilet rooms and bathrooms that are not required to comply with Section 1003.11.2.
2. A turning space is not required within closets or pantries that are 48 inches (1220 mm) maximum in depth.

1003.3.3 Components. Accessible routes shall consist of one or more of the following elements: walking surfaces with a slope not steeper than 1:20, doors and doorways, ramps, elevators, and platform lifts.

1003.4 Walking surfaces. Walking surfaces that are part of an accessible route shall comply with Section 403.

1003.5 Doors and doorways. The primary entrance door to the unit, and all other doorways intended for user passage, shall comply with Section 404.

Exceptions:

1. Thresholds at exterior sliding doors shall be permitted to be $^3/_4$ inch (19 mm) maximum in height, provided they are beveled with a slope not greater than 1:2.
2. In toilet rooms and bathrooms not required to comply with Section 1003.11.2, maneuvering clearances required by Section 404.2.3 are not required on the toilet room or bathroom side of the door.
3. A turning space between doors in a series as required by Section 404.2.5 is not required.
4. Storm and screen doors are not required to comply with Section 404.2.5.

INTERNATIONAL CODE COUNCIL®
Copyright © 2014 ICC. ALL RIGHTS RESERVED. Accessed by William Munson on Jan 4, 2017 9:33:41 PM pursuant to License Agreement with ICC. No further reproduction or distribution authorized. ANY UNAUTHORIZED REPRODUCTION OR DISTRIBUTION IS A VIOLATION OF THE FEDERAL COPYRIGHT ACT AND THE LICENSE AGREEMENT, AND SUBJECT TO CIVIL AND CRIMINAL PENALTIES THEREUNDER.

5. Communicating doors between individual sleeping units are not required to comply with Section 404.2.5.
6. At other than the primary entrance door, where exterior space dimensions of balconies are less than the required maneuvering clearance, door maneuvering clearance is not required on the exterior side of the door.

1003.6 Ramps. Ramps shall comply with Section 405.

1003.7 Elevators. Elevators within the unit shall comply with Section 407, 408, or 409.

1003.8 Platform lifts. Platform lifts within the unit shall comply with Section 410.

1003.9 Operable parts. Lighting controls, electrical panelboards, electrical switches and receptacle outlets, environmental controls, appliance controls, operating hardware for operable windows, plumbing fixture controls, and user controls for security or intercom systems shall comply with Section 309.

Exceptions:

1. Receptacle outlets serving a dedicated use.
2. Where two or more receptacle outlets are provided in a kitchen above a length of counter top that is uninterrupted by a sink or appliance, one receptacle outlet shall not be required to comply with Section 309.
3. Floor receptacle outlets.
4. HVAC diffusers.
5. Controls mounted on ceiling fans.
6. Where redundant controls other than light switches are provided for a single element, one control in each space shall not be required to be accessible.
7. Reset buttons and shut-offs serving appliances, piping and plumbing fixtures.
8. Electrical panelboards shall not be required to comply with Section 309.4.

1003.10 Laundry equipment. Washing machines and clothes dryers shall comply with Section 611.

1003.11 Toilet and bathing facilities. At least one toilet and bathing facility shall comply with Section 1003.11.2. All toilet and bathing facilities shall comply with Section 1003.11.1.

1003.11.1 Grab bar and shower seat reinforcement. Reinforcement shall be provided for the future installation of grab bars complying with Section 604.5 at water closets; grab bars complying with Section 607.4 at bathtubs; and for grab bars and shower seats complying with Sections 608.3, 608.2.1.3, 608.2.2.3 and 608.2.3.2 at shower compartments.

Exceptions:

1. At fixtures not required to comply with Section 1003.11.2, reinforcement in accordance with Section 1004.11.1 shall be permitted.
2. Reinforcement is not required in a room containing only a lavatory and a water closet, provided the room does not contain the only lavatory or water closet on the accessible level of the dwelling unit.
3. Reinforcement for the water closet side wall vertical grab bar component required by Section 604.5 is not required.
4. Where the lavatory overlaps the water closet clearance in accordance with the exception to Section 1003.11.2.4.4 reinforcement at the water closet rear wall for a 24-inch (610 mm) minimum length grab bar, centered on the water closet, shall be provided.

1003.11.2 General. At least one toilet and bathing facility shall comply with Section 1003.11.2. At least one lavatory, one water closet and either a bathtub or shower within the unit shall comply with Section 1003.11.2. The accessible toilet and bathing fixtures shall be in a single toilet/bathing area, such that travel between fixtures does not require travel through other parts of the unit.

1003.11.2.1 Doors. Doors shall not swing into the clear floor space or clearance for any fixture.

Exception: Where a clear floor space complying with Section 305.3 is provided within the room beyond the arc of the door swing.

1003.11.2.2 Lavatory. Lavatories shall comply with Section 606.

Exception: Cabinetry shall be permitted under the lavatory, provided the following criteria are met:

(a) The cabinetry can be removed without removal or replacement of the lavatory;

(b) The floor finish extends under the cabinetry; and

(c) The walls behind and surrounding the cabinetry are finished.

1003.11.2.3 Mirrors. Mirrors above accessible lavatories shall have the bottom edge of the reflecting surface 40 inches (1015 mm) maximum above the floor.

1003.11.2.4 Water closet. Water closets shall comply with Section 1003.11.2.4.

1003.11.2.4.1 Location. The water closet shall be positioned with a wall to the rear and to one side. The centerline of the water closet shall be 16 inches (405 mm) minimum and 18 inches (455 mm) maximum from the sidewall.

1003.11.2.4.2 Clearance width. Clearance around the water closet shall be 60 inches (1525 mm) minimum in width, measured perpendicular from the side wall.

1003.11.2.4.3 Clearance depth. Clearance around the water closet shall be 56 inches (1420 mm) minimum in depth, measured perpendicular from the rear wall.

INTERNATIONAL CODE COUNCIL®
Copyright © 2014 ICC. ALL RIGHTS RESERVED. Accessed by William Munson on Jan 4, 2017 9:33:41 PM pursuant to License Agreement with ICC. No further reproduction or distribution authorized. ANY UNAUTHORIZED REPRODUCTION OR DISTRIBUTION IS A VIOLATION OF THE FEDERAL COPYRIGHT ACT AND THE LICENSE AGREEMENT, AND SUBJECT TO CIVIL AND CRIMINAL PENALTIES THEREUNDER.

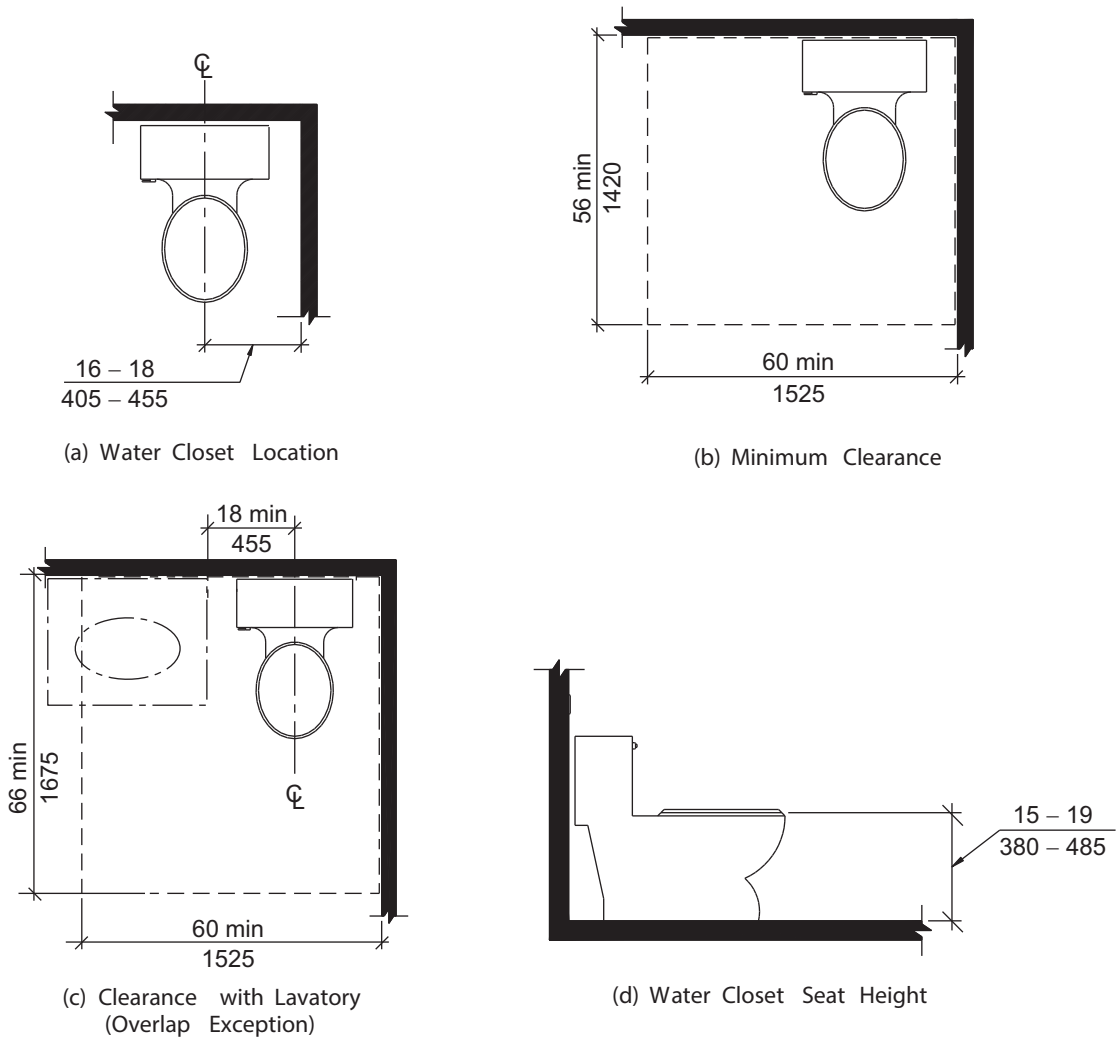

FIGURE 1003.11.2.4
WATER CLOSETS IN TYPE A UNITS

1003.11.2.4.4 Clearance overlap. The required clearance around the water closet shall be permitted to overlap the water closet, associated grab bars, paper dispensers, coat hooks, shelves, accessible routes, clear floor space required at other fixtures, and the wheelchair turning space. No other fixtures or obstructions shall be located within the required water closet clearance.

Exception: A lavatory measuring 24 inches (610 mm) maximum in depth and complying with Section 1003.11.2.2 shall be permitted on the rear wall 18 inches (455 mm) minimum from the centerline of the water closet to the side edge of the lavatory where the clearance at the water closet is 66 inches (1675 mm) minimum measured perpendicular from the rear wall.

1003.11.2.4.5 Height. The top of the water closet seat shall be 15 inches (380 mm) minimum and 19 inches (485 mm) maximum above the floor, measured to the top of the seat.

1003.11.2.4.6 Flush controls. Flush controls shall be hand-operated or automatic. Hand operated flush controls shall comply with Section 309. Hand-operated flush controls shall be located on the open side of the water closet.

1003.11.2.5 Bathing fixtures. The accessible bathing fixture shall be a bathtub complying with Section 1003.11.2.5.1 or a shower compartment complying with Section 1003.11.2.5.2.

1003.11.2.5.1 Bathtub. Bathtubs shall comply with Section 607.

Exceptions:

1. The removable in-tub seat required by Section 607.3 is not required.
2. Counter tops and cabinetry shall be permitted at one end of the clearance, provided the following criteria are met:
   (a) The countertop and cabinetry can be removed;

INTERNATIONAL CODE COUNCIL®
Copyright © 2014 ICC. ALL RIGHTS RESERVED. Accessed by William Munson on Jan 4, 2017 9:33:41 PM pursuant to License Agreement with ICC. No further reproduction or distribution authorized. ANY UNAUTHORIZED REPRODUCTION OR DISTRIBUTION IS A VIOLATION OF THE FEDERAL COPYRIGHT ACT AND THE LICENSE AGREEMENT, AND SUBJECT TO CIVIL AND CRIMINAL PENALTIES THEREUNDER.

(b) The floor finish extends under the countertop and cabinetry; and

(c) The walls behind and sur-rounding the countertop and cabinetry are finished.

1003.11.2.5.2 Shower. Showers shall comply with Section 608.

Exception: At standard roll-in shower compartments complying with Section 608.2.2, lavatories, counter tops and cabinetry shall be permitted at one end of the clearance, provided the following criteria are met:

(a) The countertop and cabinetry can be removed;

(b) The floor finish extends under the countertop and cabinetry; and

(c) The walls behind and surrounding the countertop and cabinetry are finished.

1003.12 Kitchens and kitchenettes. Kitchens and kitchenettes shall comply with Section 1003.12.

1003.12.1 Clearance. Clearance complying with Section 1003.12.1 shall be provided.

1003.12.1.1 Minimum clearance. Clearance between all opposing base cabinets, counter tops, appliances, or walls within kitchen work areas shall be 40 inches (1015mm) minimum.

1003.12.1.2 U-Shaped kitchens. In kitchens with counters, appliances, or cabinets on three contiguous sides, clearance between all opposing base cabinets, countertops, appliances, or walls within kitchen work areas shall be 60 inches (1525 mm) minimum.

1003.12.2 Clear floor space. Clear floor spaces required by Sections 1003.12.3 through 1003.12.5 shall comply with Section 305.

1003.12.3 Work surface. At least one section of counter shall provide a work surface 30 inches (760 mm) minimum in length complying with Section 1003.12.3.

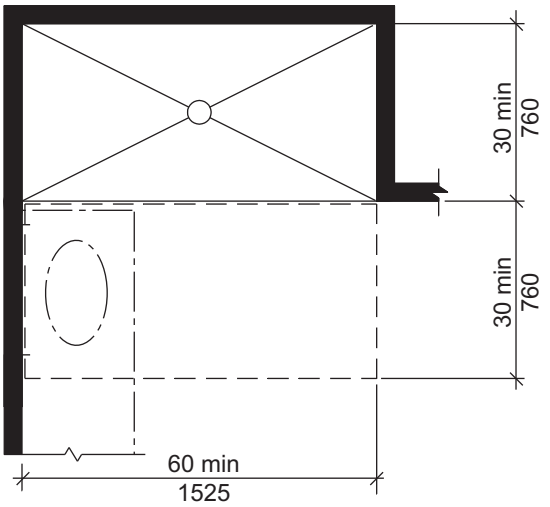

Note: Lavatory permitted per Section 608.2.2

FIGURE 1003.11.2.5.2
STANDARD ROLL-IN-TYPE SHOWER COMPARTMENT IN TYPE A UNITS

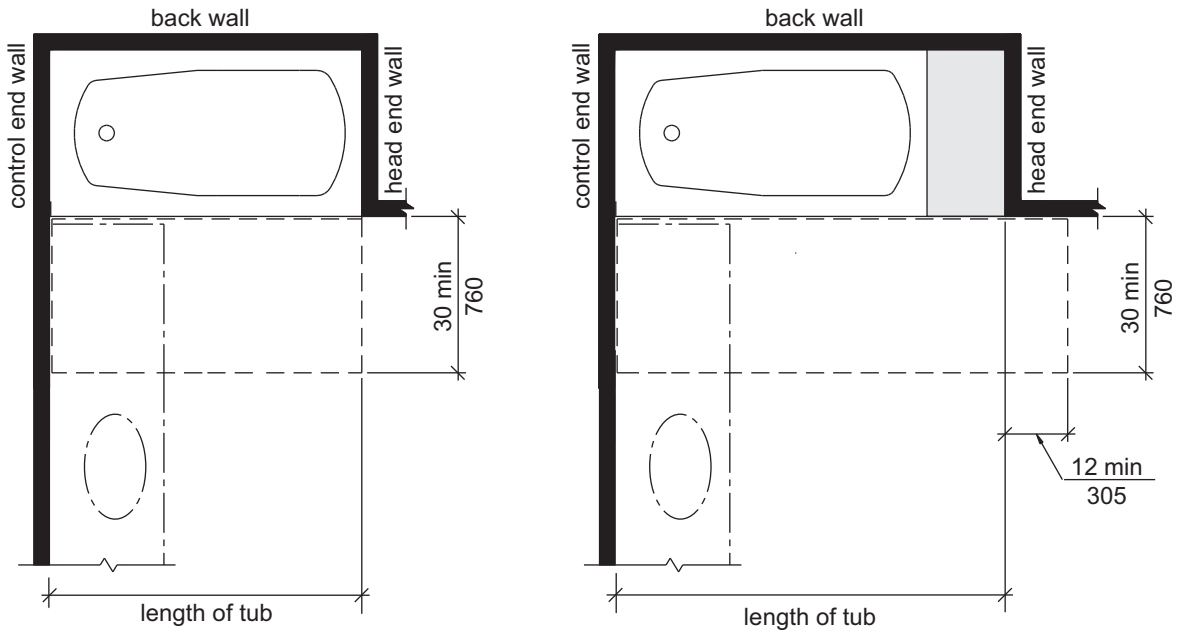

(a) Without Permanent Seat

(b) With Permanent Seat

FIGURE 1003.11.2.5.1
CLEARANCE FOR BATHTUBS IN TYPE A UNITS

INTERNATIONAL CODE COUNCIL®
Copyright © 2014 ICC. ALL RIGHTS RESERVED. Accessed by William Munson on Jan 4, 2017 9:33:41 PM pursuant to License Agreement with ICC. No further reproduction or distribution authorized. ANY UNAUTHORIZED REPRODUCTION OR DISTRIBUTION IS A VIOLATION OF THE FEDERAL COPYRIGHT ACT AND THE LICENSE AGREEMENT, AND SUBJECT TO CIVIL AND CRIMINAL PENALTIES THEREUNDER.

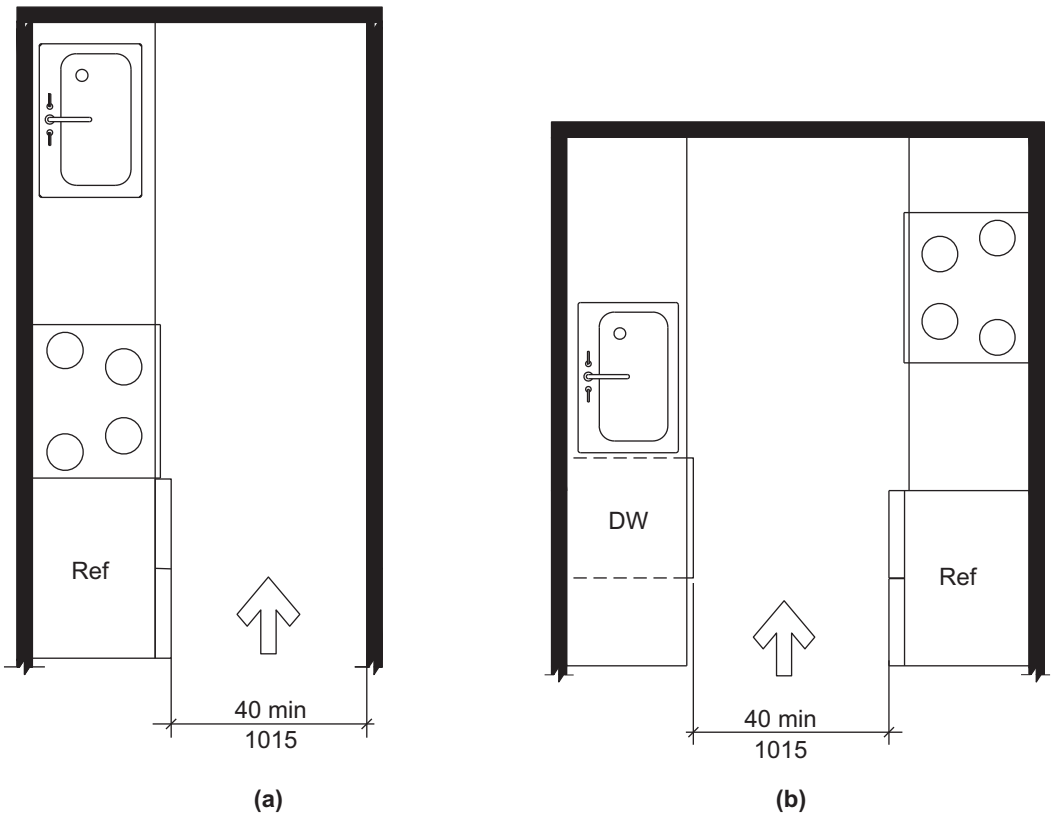

FIGURE 1003.12.1.1
MINIMUM KITCHEN CLEARANCE IN TYPE A UNITS

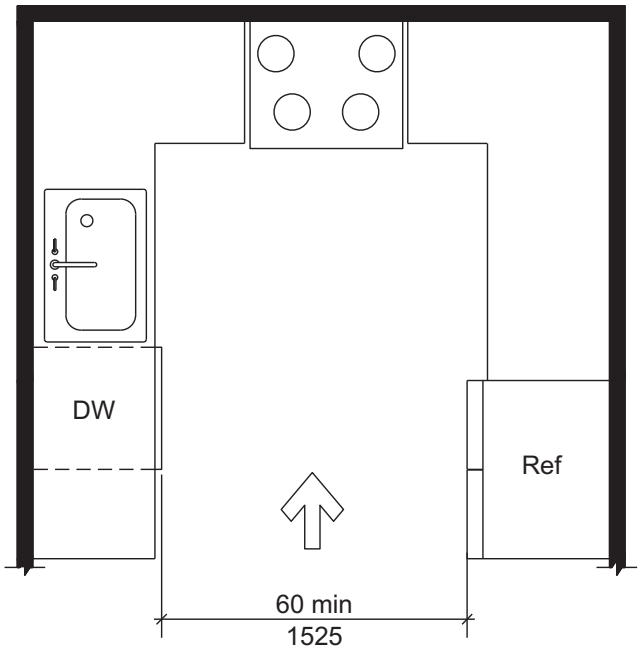

FIGURE 1003.12.1.2
U-SHAPED KITCHEN CLEARANCE IN TYPE A UNITS

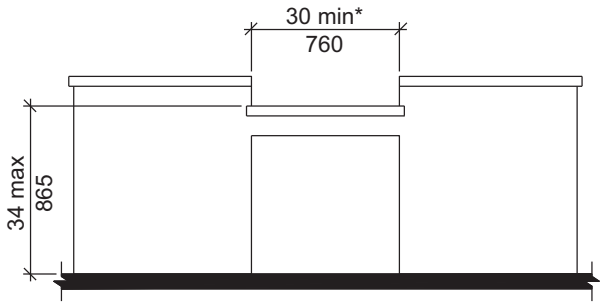

* 36 min. (915) if part of T-shaped turning space per Sections 304.3.2 and 1003.3.2

FIGURE 1003.12.3
WORK SURFACE IN KITCHEN FOR TYPE A UNITS

INTERNATIONAL CODE COUNCIL®
Copyright © 2014 ICC. ALL RIGHTS RESERVED. Accessed by William Munson on Jan 4, 2017 9:33:41 PM pursuant to License Agreement with ICC. No further reproduction or distribution authorized. ANY UNAUTHORIZED REPRODUCTION OR DISTRIBUTION IS A VIOLATION OF THE FEDERAL COPYRIGHT ACT AND THE LICENSE AGREEMENT, AND SUBJECT TO CIVIL AND CRIMINAL PENALTIES THEREUNDER.

1003.12.3.1 Clear floor space. A clear floor space, positioned for a forward approach to the work surface, shall be provided. Knee and toe clearance complying with Section 306 shall be provided. The clear floor space shall be centered on the work surface.

Exception: Cabinetry shall be permitted under the work surface, provided the following criteria are met:

(a) The cabinetry can be removed without removal or replacement of the work surface,

(b) The floor finish extends under the cabinetry, and

(c) The walls behind and surrounding the cabinetry are finished.

1003.12.3.2 Height. The work surface shall be 34 inches (865 mm) maximum above the floor.

Exception: A counter that is adjustable to provide a work surface at variable heights 29 inches (735 mm) minimum and 36 inches (915 mm) maximum above the floor, or that can be relocated within that range without cutting the counter or damaging adjacent cabinets, walls, doors, and structural elements, shall be permitted.

1003.12.3.3 Exposed surfaces. There shall be no sharp or abrasive surfaces under the exposed portions of work surface counters.

1003.12.4 Sink. The sink shall comply with Section 1003.12.4.

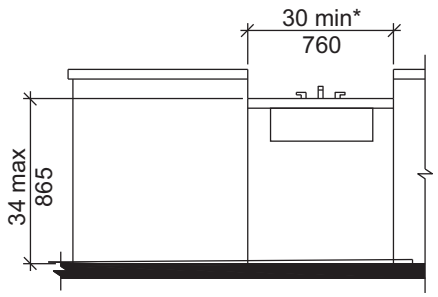

* 36 min. (915) if part of T-shaped turning space per Sections 304.3.2 and 1003.3.2

FIGURE 1003.12.4
KITCHEN SINK FOR TYPE A UNITS

1003.12.4.1 Clear floor space. A clear floor space, positioned for a forward approach to the sink, shall be provided. Knee and toe clearance complying with Section 306 shall be provided.

Exceptions:

1. The requirement for knee and toe clearance shall not apply to more than one bowl of a multi-bowl sink.
2. Cabinetry shall be permitted to be added under the sink, provided the following criteria are met:

   (a) The cabinetry can be removed without removal or replacement of the sink,

   (b) The floor finish extends under the cabinetry, and

   (c) The walls behind and surrounding the cabinetry are finished.

1003.12.4.2 Height. The front of the sink shall be 34 inches (865 mm) maximum above the floor, measured to the higher of the rim or counter surface.

Exception: A sink and counter that is adjustable to variable heights 29 inches (735 mm) minimum and 36 inches (915 mm) maximum above the floor, or that can be relocated within that range without cutting the counter or damaging adjacent cabinets, walls, doors and structural elements, provided rough-in plumbing permits connections of supply and drain pipes for sinks mounted at the height of 29 inches (735 mm), shall be permitted.

1003.12.4.3 Faucets. Faucets shall comply with Section 309.

1003.12.4.4 Exposed pipes and surfaces. Water supply and drain pipes under sinks shall be insulated or otherwise configured to protect against contact. There shall be no sharp or abrasive surfaces under sinks.

1003.12.5 Appliances. Where provided, kitchen appliances shall comply with Section 1003.12.5.

1003.12.5.1 Operable parts. All appliance controls shall comply with Section 1003.9.

Exceptions:

1. Appliance doors and door latching devices shall not be required to comply with Section 309.4.
2. Bottom-hinged appliance doors, when in the open position, shall not be required to comply with Section 309.3.

1003.12.5.2 Clear floor space. A clear floor space, positioned for a parallel or forward approach, shall be provided at each kitchen appliance.

1003.12.5.3 Dishwasher. A clear floor space, positioned adjacent to the dishwasher door, shall be provided. The dishwasher door in the open position shall not obstruct the clear floor space for the dishwasher or an adjacent sink.

1003.12.5.4 Cooktop. Cooktops shall comply with Section 1003.12.5.4.

1**003.12.5.4.1 Approach.** A clear floor space, positioned for a parallel or forward approach to the cooktop, shall be provided.

1003.12.5.4.2 Forward approach. Where the clear floor space is positioned for a forward approach, knee and toe clearance complying with Section 306 shall be provided. The underside of the cooktop shall be insulated or otherwise configured to protect from burns, abrasions, or electrical shock.

1003.12.5.4.3 Parallel approach. Where the clear floor space is positioned for a parallel approach, the clear floor space shall be centered on the appliance.

INTERNATIONAL CODE COUNCIL®
Copyright © 2014 ICC. ALL RIGHTS RESERVED. Accessed by William Munson on Jan 4, 2017 9:33:41 PM pursuant to License Agreement with ICC. No further reproduction or distribution authorized. ANY UNAUTHORIZED REPRODUCTION OR DISTRIBUTION IS A VIOLATION OF THE FEDERAL COPYRIGHT ACT AND THE LICENSE AGREEMENT, AND SUBJECT TO CIVIL AND CRIMINAL PENALTIES THEREUNDER.

1003.12.5.4.4 Controls. The location of controls shall not require reaching across burners.

1003.12.5.5 Oven. Ovens shall comply with Section 1003.12.5.5. Ovens shall have controls on front panels, on either side of the door.

1003.12.5.5.1 Clear floor space. A clear floor space shall be provided. The oven door in the open position shall not obstruct the clear floor space for the oven.

1003.12.5.5.2 Side-hinged door ovens. Side-hinged door ovens shall have a countertop positioned adjacent to the latch side of the oven door.

1003.12.5.5.3 Bottom-hinged door ovens. Bottom-hinged door ovens shall have a countertop positioned adjacent to one side of the door.

1003.12.5.5.4 Controls. The location of controls shall not require reaching across burners.

1003.12.5.6 Refrigerator/freezer. Combination refrigerators and freezers shall have at least 50 percent of the freezer compartment shelves, including the bottom of the freezer 54 inches (1370 mm) maximum above the floor when the shelves are installed at the maximum heights possible in the compartment. A clear floor space, positioned for a parallel approach to the refrigerator/freezer, shall be provided. The centerline of the clear floor space shall be offset 24 inches (610 mm) maximum from the centerline of the appliance.

1003.13 Windows. Windows shall comply with Section 1003.13.

1003.13.1 Natural ventilation. Operable windows required to provide natural ventilation shall comply with Sections 309.2 and 309.3.

1003.13.2 Emergency escape. Operable windows required to provide an emergency escape and rescue opening shall comply with Section 309.2.

1003.14 Storage facilities. Where storage facilities are provided, at least one of each type shall comply with Section 905.

Exception: Kitchen cabinets shall not be required to comply with Section 1003.14.

SECTION 1004
TYPE B UNITS

1004.1 General. Type B units shall comply with Section 1004.

1004.2 Primary entrance. The accessible primary entrance shall be on an accessible route from public and common areas. The primary entrance shall not be to a bedroom unless it is the only entrance.

1004.3 Accessible route. Accessible routes within Type B units shall comply with Section 1004.3.

1004.3.1 Location. At least one accessible route shall connect all spaces and elements that are a part of the unit. Accessible routes shall coincide with or be located in the same area as a general circulation path.

Exceptions:

1. An accessible route is not required to unfinished attics and unfinished basements that are part of the unit.
2. One of the following is not required to be on an accessible route:
   2.1. A raised floor area in a portion of a living, dining, or sleeping room; or
   2.2. A sunken floor area in a portion of a living, dining, or sleeping room; or
   2.3. A mezzanine that does not have plumbing fixtures or an enclosed habitable space.

1004.3.2 Components. Accessible routes shall consist of one or more of the following elements: walking surfaces with a slope not steeper than 1:20, doors and doorways, ramps, elevators, and platform lifts.

1004.4 Walking surfaces. Walking surfaces that are part of an accessible route shall comply with Section 1004.4.

1004.4.1 Clear width. Clear width of an accessible route shall comply with Section 403.5.

1004.4.2 Changes in level. Changes in level shall comply with Section 303.

Exception: Where exterior deck, patio or balcony surface materials are impervious, the finished exterior impervious surface shall be 2 inches (50 mm) below the floor level of the adjacent interior spaces of the unit.

1004.5 Doors and doorways. Doors and doorways shall comply with Section 1004.5.

1004.5.1 Primary entrance door. The primary entrance door to the unit shall comply with Section 404.

Exception: Storm and screen doors serving individual dwelling or sleeping units are not required to comply with Section 404.2.5.

1004.5.2 User passage doorways. Doorways intended for user passage shall comply with Section 1004.5.2.

1004.5.2.1 Clear width. Doorways shall have a clear opening of $31^{3}/_{4}$ inches (805 mm) minimum. Clear opening of swinging doors shall be measured between the face of the door and stop, with the door open 90 degrees.

1004.5.2.1.1 Double leaf doorways. Where the operable parts on an inactive leaf of a double leaf doorway are located more than 48 inches (1220 mm) or less than 15 inches (380 mm) above the floor, the active leaf shall provide the clearance required by Section 1004.5.2.1.

1004.5.2.2 Thresholds. Thresholds shall comply with Section 303.

Exception: Thresholds at exterior slidng doors shall be permitted to be $^{3}/_{4}$ inch (19 mm) maximum in height, provided they are beveled with a slope not steeper than 1:2.

INTERNATIONAL CODE COUNCIL®
Copyright © 2014 ICC. ALL RIGHTS RESERVED. Accessed by William Munson on Jan 4, 2017 9:33:41 PM pursuant to License Agreement with ICC. No further reproduction or distribution authorized. ANY UNAUTHORIZED REPRODUCTION OR DISTRIBUTION IS A VIOLATION OF THE FEDERAL COPYRIGHT ACT AND THE LICENSE AGREEMENT, AND SUBJECT TO CIVIL AND CRIMINAL PENALTIES THEREUNDER.

1004.5.2.3 Automatic doors. Automatic doors shall comply with Section 404.3.

1004.6 Ramps. Ramps shall comply with Section 405.

1004.7 Elevators. Elevators within the unit shall comply with Section 407, 408, or 409.

1004.8 Platform lifts. Platform lifts within the unit shall comply with Section 410.

1004.9 Operable parts. Lighting controls, electrical switches and receptacle outlets, environmental controls, electrical panelboards, and user controls for security or intercom systems shall comply with Sections 309.2 and 309.3.

Exceptions:

1. Receptacle outlets serving a dedicated use.
2. Where two or more receptacle outlets are provided in a kitchen above a length of counter top that is uninterrupted by a sink or appliance, one receptacle outlet shall not be required to comply with Section 309.
3. Floor receptacle outlets.
4. HVAC diffusers.
5. Controls mounted on ceiling fans.
6. Controls or switches mounted on appliances.
7. Plumbing fixture controls.
8. Reset buttons and shut-offs serving appliances, piping and plumbing fixtures.
9. Where redundant controls other than light switches are provided for a single element, one control in each space shall not be required to be accessible.
10. Within kitchens and bathrooms, lighting controls, electrical switches and receptacle outlets are permitted to be located over cabinets with counter tops 36 inches (915 mm) maximum in height and $25^1/_2$ inches (650 mm) maximum in depth.

1004.10 Laundry equipment. Washing machines and clothes dryers shall comply with Section 1004.10.

1004.10.1 Clear floor space. A clear floor space complying with Section 305.3, shall be provided. A parallel approach shall be provided for a top loading machine. A forward or parallel approach shall be provided for a front loading machine.

1004.11 Toilet and bathing facilities. Toilet and bathing fixtures shall comply with Section 1004.11.

Exception: Fixtures on levels not required to be accessible.

1004.11.1 Grab bar and shower seat reinforcement. Reinforcement shall be provided for the future installation of grab bars and shower seats at water closets, bathtubs, and shower compartments. Where walls are located to permit the installation of grab bars and seats complying with Section 604.5 at water closets; grab bars complying with Section 607.4 at bathtubs; and for grab bars and shower seats complying with Sections, 608.3, 608.2.1.3, 608.2.2.3 and 608.2.3.2 at shower compartments; reinforcement shall be provided for the future installation of grab bars and seats complying with those requirements.

Exceptions:

1. In a room containing only a lavatory and a water closet, reinforcement is not required provided the room does not contain the only lavatory or water closet on the accessible level of the unit.
2. At water closets reinforcement for the side wall vertical grab bar component required by Section 604.5 is not required.
3. At water closets where wall space will not permit a grab bar complying with Section 604.5.2, reinforcement for a rear wall grab bar 24 inches (610 mm) minimum in length centered on the water closet shall be provided.
4. At water closets where a side wall is not available for a 42-inch (1065 mm) grab bar complying with Section 604.5.1, reinforcement for a sidewall grab bar, 24 inches (610 mm) minimum in length, located 12 inches (305 mm) maximum from the rear wall, shall be provided.
5. At water closets where a side wall is not available for a 42-inch (1065 mm) grab bar complying with Section 604.5.1 reinforcement for a swing-up grab bar complying with Section 1004.11.1.1 shall be permitted.
6. At water closets where a side wall is not available for a 42-inch (1065 mm) grab bar complying with Section 604.5.1 reinforcement for two swing-up grab bars complying with Section 1004.11.1.1 shall be permitted to be installed in lieu of reinforcement for rear wall and side wall grab bars.
7. In shower compartments larger than 36 inches (915 mm) in width and 36 inches (915 mm) in depth reinforcement for a shower seat is not required.

1004.11.1.1 Swing–up grab bars. A clearance of 18 inches (455 mm) minimum from the centerline of the water closet to any side wall or obstruction shall be provided where reinforcement for swing–up grab bars is provided. When the approach to the water closet is from the side, the 18 inches (455 mm) minimum shall be on the side opposite the direction of approach. Reinforcement shall accommodate a swing–up grab bar centered $15^3/_4$ inches (400 mm) from the centerline of the water closet and 28 inches (710 mm) minimum in length, measured from the wall to the end of the horizontal portion of the grab bar. Reinforcement shall accommodate a swing-up grab bar with a height in the down position of 33 inches (840 mm) minimum and 36 inches (915 mm) maximum. Reinforcement shall be adequate to resist forces in accordance with Section 609.8.

Exception: Where a water closet is positioned with a wall to the rear and to one side, the centerline of the water closet shall be 16 inches (405 mm) minimum and 18 inches (455 mm) maximum from the sidewall.

INTERNATIONAL CODE COUNCIL® Copyright © 2014 ICC. ALL RIGHTS RESERVED. Accessed by William Munson on Jan 4, 2017 9:33:41 PM pursuant to License Agreement with ICC. No further reproduction or distribution authorized. ANY UNAUTHORIZED REPRODUCTION OR DISTRIBUTION IS A VIOLATION OF THE FEDERAL COPYRIGHT ACT AND THE LICENSE AGREEMENT, AND SUBJECT TO CIVIL AND CRIMINAL PENALTIES THEREUNDER.

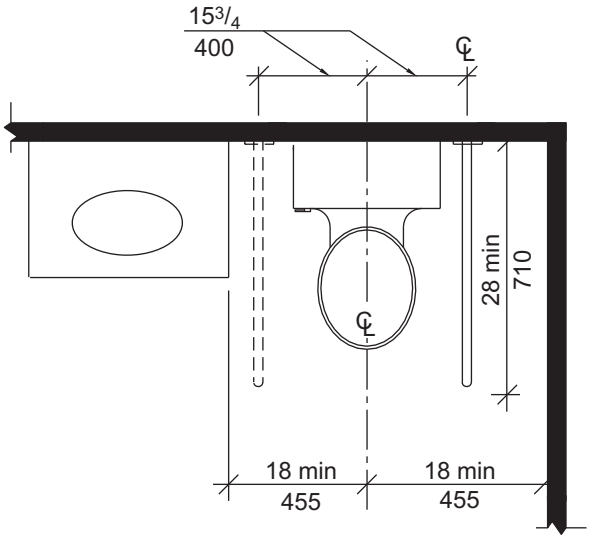

FIGURE 1004.11.1.1
SWING-UP GRAB BAR FOR WATER CLOSET

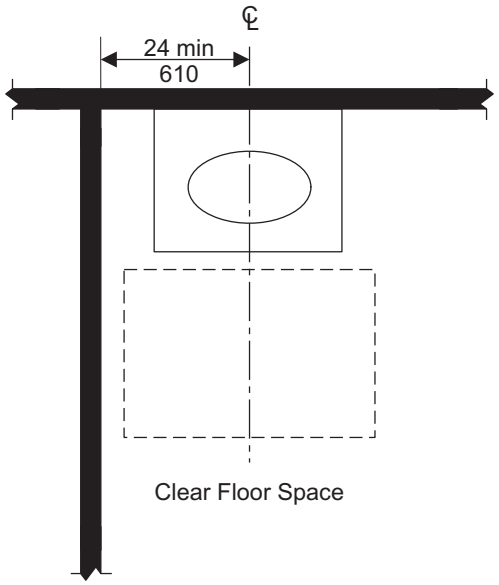

FIGURE 1004.11.3.1.1
LAVATORY IN TYPE B UNITS—OPTION A BATHROOMS

1004.11.2 Clear floor space. Clear floor spaces required by Section 1004.11.3.1 (Option A) or 1004.11.3.2 (Option B) shall comply with Sections 1004.11.2 and 305.3.

1004.11.2.1 Doors. Doors shall not swing into the clear floor space or clearance for any fixture.

Exception: Where a clear floor space complying with Section 305.3, excluding knee and toe clearances under elements, is provided within the room beyond the arc of the door swing.

1004.11.2.2 Knee and toe clearance. Clear floor space at fixtures shall be permitted to include knee and toe clearances complying with Section 306.

1004.11.3 Toilet and bathing areas. Either all toilet and bathing areas provided shall comply with Section 1004.11.3.1 (Option A), or one toilet and bathing area shall comply with Section 1004.11.3.2 (Option B).

1004.11.3.1 Option A. Each fixture provided shall comply with Section 1004.11.3.1.

Exceptions:

1. Where multiple lavatories are provided in a single toilet and bathing area such that travel between fixtures does not require travel through other parts of the unit, not more than one lavatory is required to comply with Section 1004.11.3.1.
2. A lavatory and a water closet in a room containing only a lavatory and water closet, provided the room does not contain the only lavatory or water closet on the accessible level of the unit.

1004.11.3.1.1 Lavatory. A clear floor space complying with Section 305.3, positioned for a parallel approach, shall be provided at a lavatory. The clear floor space shall be centered on the lavatory.

Exception: A lavatory complying with Section 606 shall be permitted. Cabinetry shall be permitted under the lavatory provided the following criteria are met:

(a) The cabinetry can be removed without removal or replacement of the lavatory; and

(b) The floor finish extends under the cabinetry; and

(c) The walls behind and surrounding the cabinetry are finished.

1004.11.3.1.2 Water closet. The water closet shall comply with Section 1004.11.3.1.2.

1004.11.3.1.2.1 Location. The centerline of the water closet shall be 16 inches (405 mm) minimum and 18 inches (455 mm) maximum from one side of the required clearance.

1004.11.3.1.2.2 Clearance. Clearance around the water closet shall comply with Sections 1004.11.3.1.2.2.1 through 1004.11.3.1.2.2.3.

Exception: Clearance complying with Sections 1003.11.2.4.2 through 1003.11.2.4.4.

1004.11.3.1.2.2.1 Clearance width. Clearance around the water closet shall be 48 inches (1220 mm) minimum in width, measured perpendicular from the side of the clearance that is 16 inches (405 mm) minimum and 18 inches (455 mm) maximum from the water closet centerline.

1004.11.3.1.2.2.2 Clearance depth. Clearance around the water closet shall be 56 inches (1420 mm) minimum in depth, measured perpendicular from the rear wall.

INTERNATIONAL CODE COUNCIL®
Copyright © 2014 ICC. ALL RIGHTS RESERVED. Accessed by William Munson on Jan 4, 2017 9:33:41 PM pursuant to License Agreement with ICC. No further reproduction or distribution authorized. ANY UNAUTHORIZED REPRODUCTION OR DISTRIBUTION IS A VIOLATION OF THE FEDERAL COPYRIGHT ACT AND THE LICENSE AGREEMENT, AND SUBJECT TO CIVIL AND CRIMINAL PENALTIES THEREUNDER.

(a) Water closet location

(b) Clearance width and depth

(c) Increased clearance depth – forward approach

(d) Clearance with lavatory overlap

FIGURE 1004.11.3.1.2
CLEARANCE AT WATER CLOSETS IN TYPE B UNITS

1004.11.3.1.2.2.3 Increased clearance depth at forward approach. Where a forward approach is provided, the clearance shall be 66 inches (1675 mm) minimum in depth, measured perpendicular from the rear wall.

1004.11.3.1.2.2.4 Clearance overlap. A vanity or other obstruction 24 inches (610 mm) maximum in depth, measured perpendicular from the rear wall, shall be permitted to overlap the required clearance, provided the width of the remaining clearance at the water closet is 33 inches (840 mm) minimum.

1004.11.3.1.3 Bathing fixtures. Where provided, a bathtub shall comply with Section 1004.11.3.1.3.1 or 1004.11.3.1.3.2 and a shower compartment shall comply with Section 1004.11.3.1.3.3.

1004.11.3.1.3.1 Parallel approach bathtubs. A clearance 60 inches (1525 mm) minimum in length and 30 inches (760 mm) minimum in width shall be provided in front of bathtubs with a parallel approach. Lavatories complying with Section 606 shall be permitted at the control end of the clearance. A lavatory complying with Section 1004.11.3.1.1 or a water closet shall be permitted at one end of the bathtub if a clearance of 48 inches (1220 mm) minimum in length and 30 inches (760 mm) minimum in width for a parallel approach is provided in front of the bathtub.

1004.11.3.1.3.2 Forward approach bathtubs. A clearance 60 inches (1525 mm) minimum in length and 48 inches (1220 mm) minimum in width shall be provided in front of bathtubs with a forward approach. A water closet and a lavatory shall be permitted in the clearance at one end of the bathtub.

INTERNATIONAL CODE COUNCIL®
Copyright © 2014 ICC. ALL RIGHTS RESERVED. Accessed by William Munson on Jan 4, 2017 9:33:41 PM pursuant to License Agreement with ICC. No further reproduction or distribution authorized. ANY UNAUTHORIZED REPRODUCTION OR DISTRIBUTION IS A VIOLATION OF THE FEDERAL COPYRIGHT ACT AND THE LICENSE AGREEMENT, AND SUBJECT TO CIVIL AND CRIMINAL PENALTIES THEREUNDER.

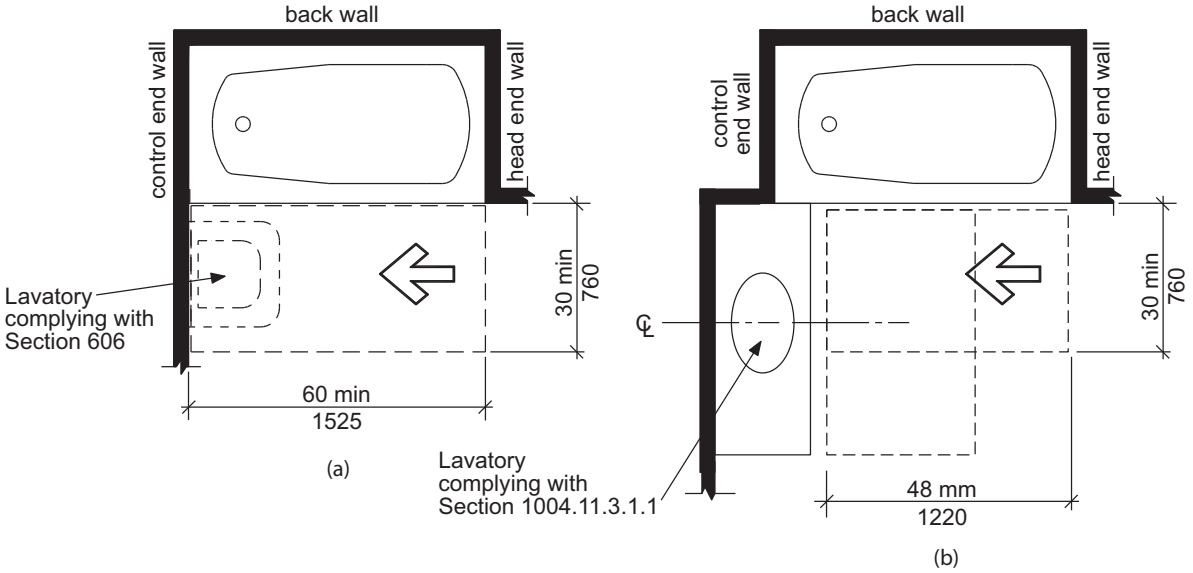

FIGURE 1004.11.3.1.3.1
PARALLEL APPROACH BATHTUB IN TYPE B UNITS—OPTION A BATHROOMS

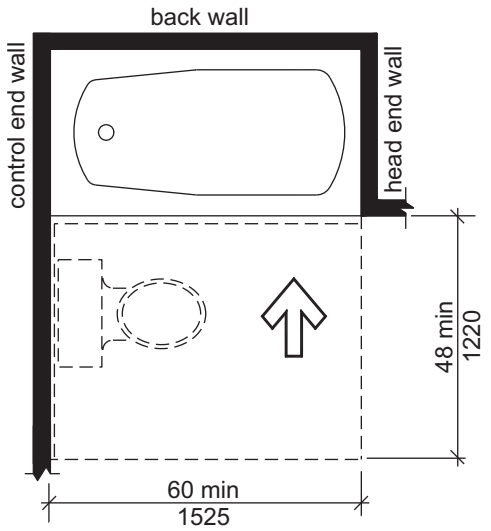

FIGURE 1004.11.3.1.3.2
FORWARD APPROACH BATHTUB IN TYPE B UNITS—OPTION A BATHROOMS

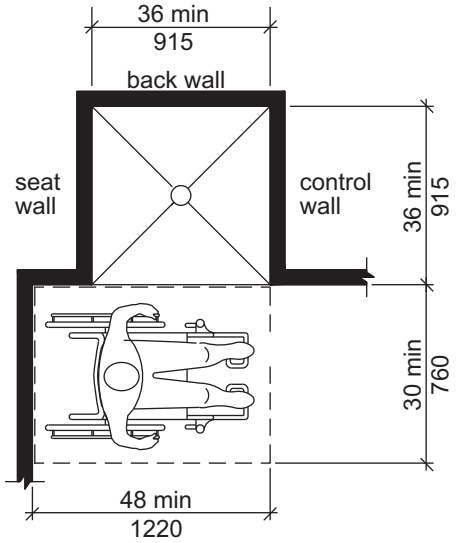

FIGURE 1004.11.3.1.3.3
TRANSFER-TYPE SHOWER COMPARTMENT IN TYPE B UNITS

1004.11.3.1.3.3 Shower compartment. If a shower compartment is the only bathing facility, the shower compartment shall have dimensions of 36 inches (915 mm) minimum in width and 36 inches (915 mm) minimum in depth. A clearance of 48 inches (1220 mm) minimum in length, measured perpendicular from the shower head wall, and 30 inches (760 mm) minimum in depth, measured from the face of the shower compartment, shall be provided. Reinforcing for a shower seat is not required in shower compartments larger than 36 inches (915 mm) in width and 36 inches (915 mm) in depth.

1004.11.3.2 Option B. One of each type of fixture provided shall comply with Section 1004.11.3.2. The accessible fixtures shall be in a single toilet/bathing area, such that travel between fixtures does not require travel through other parts of the unit.

1004.11.3.2.1 Lavatory. Lavatories shall comply with Sections 1004.11.3.1.1 and 1004.11.3.2.1.1.

1004.11.3.2.1.1 Height. The front of the lavatory shall be 34 inches (865 mm) maximum above the floor, measured to the higher of the rim or counter surface.

INTERNATIONAL CODE COUNCIL®
Copyright © 2014 ICC. ALL RIGHTS RESERVED. Accessed by William Munson on Jan 4, 2017 9:33:41 PM pursuant to License Agreement with ICC. No further reproduction or distribution authorized. ANY UNAUTHORIZED REPRODUCTION OR DISTRIBUTION IS A VIOLATION OF THE FEDERAL COPYRIGHT ACT AND THE LICENSE AGREEMENT, AND SUBJECT TO CIVIL AND CRIMINAL PENALTIES THEREUNDER.

1004.11.3.2.2 Water closet. The water closet shall comply with Section 1004.11.3.1.2.

1004.11.3.2.3 Bathing fixtures. The accessible bathing fixture shall be a bathtub complying with Section 1004.11.3.2.3.1 or a shower compartment complying with Section 1004.11.3.2.3.2.

1004.11.3.2.3.1 Bathtub. A clearance 48 inches (1220 mm) minimum in length measured perpendicular from the control end of the bathtub, and 30 inches (760 mm) minimum in width shall be provided in front of bathtubs.

1004.11.3.2.3.2 Shower compartment. A shower compartment shall comply with Section 1004.11.3.1.3.3.

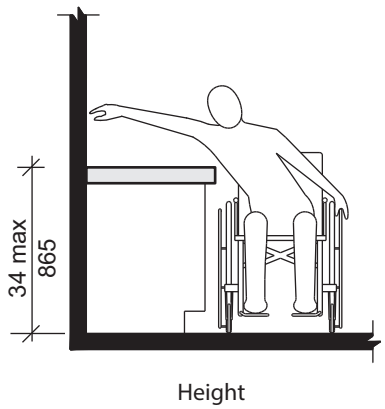

FIGURE 1004.11.3.2.1
LAVATORY IN TYPE B UNITS—OPTION B BATHROOMS

1004.12 Kitchens and kitchenettes. Kitchens and kitchenettes shall comply with Section 1004.12.

1004.12.1 Clearance. Clearance complying with Section 1004.12.1 shall be provided.

1004.12.1.1 Minimum clearance. Clearance between all opposing base cabinets, counter tops, appliances, or walls within kitchen work areas shall be 40 inches (1015 mm) minimum.

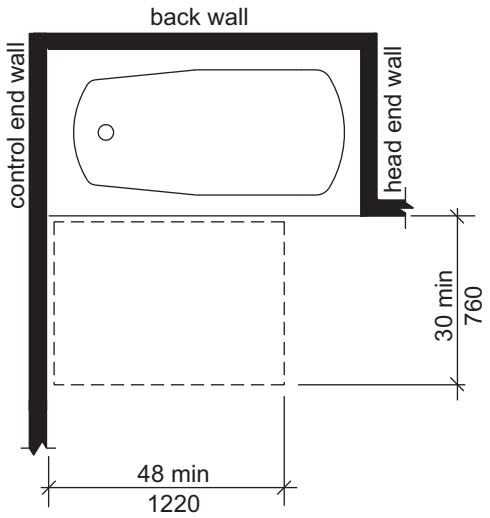

FIGURE 1004.11.3.2.3.1
BATHROOM CLEARANCE IN TYPE B UNITS—OPTION B BATHROOMS

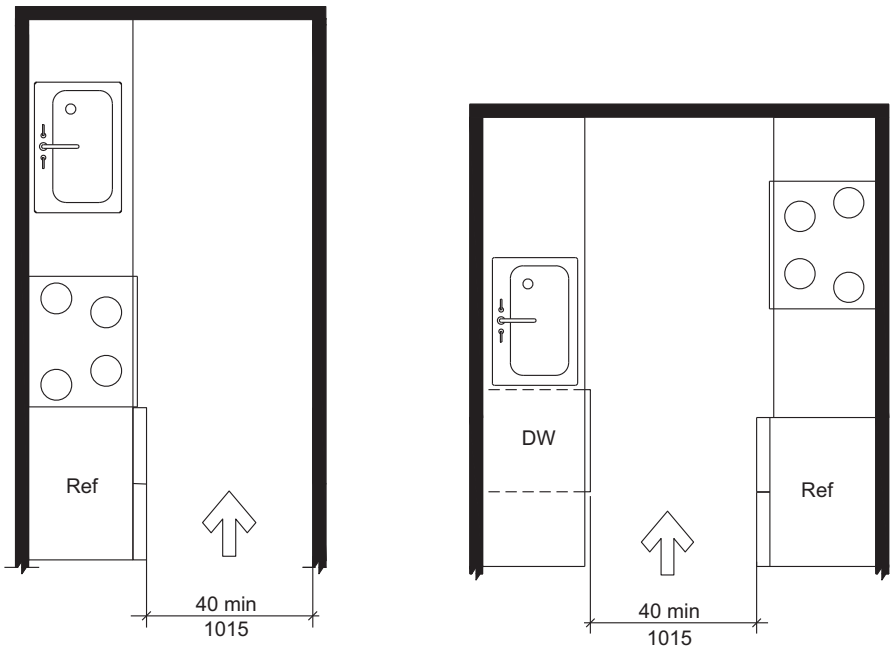

FIGURE 1004.12.1.1
MINIMUM KITCHEN CLEARANCE IN TYPE B UNITS

INTERNATIONAL CODE COUNCIL®
Copyright © 2014 ICC. ALL RIGHTS RESERVED. Accessed by William Munson on Jan 4, 2017 9:33:41 PM pursuant to License Agreement with ICC. No further reproduction or distribution authorized. ANY UNAUTHORIZED REPRODUCTION OR DISTRIBUTION IS A VIOLATION OF THE FEDERAL COPYRIGHT ACT AND THE LICENSE AGREEMENT, AND SUBJECT TO CIVIL AND CRIMINAL PENALTIES THEREUNDER.

1004.12.1.2 U-shaped kitchens. In kitchens with counters, appliances, or cabinets on three contiguous sides, clearance between all opposing base cabinets, countertops, appliances, or walls within kitchen work areas shall be 60 inches (1525 mm) minimum.

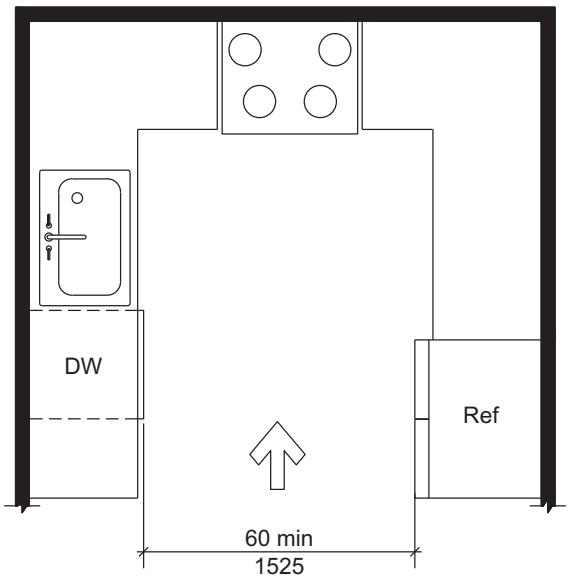

FIGURE 1004.12.1.2
U-SHAPED KITCHEN CLEARANCE IN TYPE B UNITS

1004.12.2 Clear floor space. Clear floor space at appliances shall comply with Sections 1004.12.2 and 305.3.

1004.12.2.1 Sink. A clear floor space, positioned for a parallel approach to the sink, shall be provided. The clear floor space shall be centered on the sink bowl.

Exception: A sink with a forward approach complying with Section 1003.12.4.1.

1004.12.2.2 Dishwasher. A clear floor space, positioned for a parallel or forward approach to the dishwasher, shall be provided. The dishwasher door in the open position shall not obstruct the clear floor space for the dishwasher.

1004.12.2.3 Cooktop. Cooktops shall comply with Section 1004.12.2.3.

1004.12.2.3.1 Approach. A clear floor space, positioned for a parallel or forward approach to the cooktop, shall be provided.

1004.12.2.3.2 Forward approach. Where the clear floor space is positioned for a forward approach, knee and toe clearance complying with Section 306 shall be provided. The underside of the cooktop shall be insulated or otherwise configured to prevent burns, abrasions, or electrical shock.

1004.12.2.3.3 Parallel approach. Where the clear floor space is positioned for a parallel approach, the clear floor space shall be centered on the appliance.

1004.12.2.4 Oven. A clear floor space, positioned for a parallel or forward approach adjacent to the oven shall be provided. The oven door in the open position shall not obstruct the clear floor space for the oven.

1004.12.2.5 Refrigerator/freezer. A clear floor space, positioned for a parallel approach to the refrigerator/freezer, shall be provided. The centerline of the clear floor space shall be offset 24 inches (610 mm) maximum from the centerline of the appliance.

1004.12.2.6 Trash compactor. A clear floor space, positioned for a parallel or forward approach to the trash compactor, shall be provided.

SECTION 1005
TYPE C (VISITABLE) UNITS

1005.1 General. Type C (Visitable) dwelling units shall comply with Section 1005.

1005.2 Unit entrance. At least one unit entrance shall be on a circulation path complying with Section 1005.5 from a public street or sidewalk, a dwelling unit driveway, or a garage.

1005.3 Connected spaces. A circulation path complying with Section 1005.5 shall connect the unit entrance complying with Section 1005.2 and with the spaces specified in Section 1005.4.

1005.4 Interior spaces. The entrance level shall include a toilet room or bathroom complying with Section 1005.6 and one habitable space with an area 70 square feet (6.5 m^2) minimum. Where a food preparation area is provided on the entrance level, it shall comply with Section 1005.7.

Exception: A toilet room or bathroom shall not be required on an entrance level with less than 120 square feet (11.1 m^2) of habitable space.

1005.5 Circulation path. Circulation paths shall comply with Section 1005.5.

1005.5.1 Components. The circulation path shall consist of one or more of the following elements: walking surfaces with a slope not steeper that 1:20, doors and doorways, ramps, elevators complying with Sections 407 through 409, and wheelchair (platform) lifts complying with Section 410.

1005.5.2 Walking surfaces. Walking surfaces with slopes not steeper than 1:20 shall comply with Section 303.

1005.5.2.1 Clear width. The clear width of the circulation path shall comply with Section 403.5.

1005.5.3 Doors and doorways. Doors and doorways shall comply with Section 1005.5.3

1005.5.3.1 Clear width. Doorways shall have a clear opening of $31^3/_4$ inches (805 mm) minimum. Clear opening of swinging doors shall be measured between the face of the door and stop, with the door open 90 degrees.

1005.5.3.2 Thresholds. Thresholds shall comply with Section 303.

Exception: Thresholds at exterior sliding doors shall be permitted to be $^3/_4$ inch (19 mm) maximum

INTERNATIONAL CODE COUNCIL®
Copyright © 2014 ICC. ALL RIGHTS RESERVED. Accessed by William Munson on Jan 4, 2017 9:33:41 PM pursuant to License Agreement with ICC. No further reproduction or distribution authorized. ANY UNAUTHORIZED REPRODUCTION OR DISTRIBUTION IS A VIOLATION OF THE FEDERAL COPYRIGHT ACT AND THE LICENSE AGREEMENT, AND SUBJECT TO CIVIL AND CRIMINAL PENALTIES THEREUNDER.

in height, provided they are beveled with a slope not steeper than 1:2.

1005.5.4 Ramps. Ramps shall comply with Section 405.

Exception: Handrails, intermediate landings and edge protection are not required where the sides of ramp runs have a vertical drop off of $^1/_2$ inch (13 mm) maximum within 10 inches (255 mm) horizontally of the ramp run.

1005.5.4.1 Clear width. The clear width of the circulation path shall comply with Section 403.5.

1005.6 Toilet room or bathroom. At a minimum, the toilet room or bathroom required by Section 1005.4 shall include a lavatory and a water closet. Reinforcement shall be provided for the future installation of grab bars at water closets. Clearances at the water closet shall comply with Section 1004.11.3.1.2.

1005.7 Food preparation area. At a minimum, the food preparation area shall include a sink, a cooking appliance, and a refrigerator. Clearances between all opposing base cabinets, counter tops, appliances or walls within the food preparation area shall be 40 inches (1015 mm) minimum in width.

Exception: Spaces that do not provide a cooktop or conventional range shall be permitted to provide a clearance of 36 inches (915 mm) minimum in width.

1005.8 Lighting controls and receptacle outlets. Receptacle outlets and operable parts of lighting controls shall be located 15 inches (380 mm) minimum and 48 inches (1220 mm) maximum above the floor.

Exception: The following shall not be required to comply with Section 1005.8.

1. Receptacle outlets serving a dedicated use.
2. Controls mounted on ceiling fans and ceiling lights.
3. Floor receptacle outlets.
4. Lighting controls and receptacle outlets over countertops.

SECTION 1006
UNITS WITH ACCESSIBLE COMMUNICATION FEATURES

1006.1 General. Units required to have accessible communication features shall comply with Section 1006.

1006.2 Unit smoke detection. Where provided, unit smoke detection shall include audible notification complying with NFPA 72 listed in Section 105.2.2.

1006.3 Building fire alarm system. Where a building fire alarm system is provided, the system wiring shall be extended to a point within the unit in the vicinity of the unit smoke detection system.

1006.4 Visible notification appliances. Visible notification appliances, where provided within the unit as part of the unit smoke detection system or the building fire alarm system, shall comply with Section 1006.4.

1006.4.1 Appliances. Visible notification appliances shall comply with Section 702.

1006.4.2 Activation. All visible notification appliances provided within the unit for smoke detection notification shall be activated upon smoke detection. All visible notification appliances provided within the unit for building fire alarm notification shall be activated upon activation of the building fire alarm in the portion of the building containing the unit.

1006.4.3 Interconnection. The same visible notification appliances shall be permitted to provide notification of unit smoke detection and building fire alarm activation.

1006.4.4 Prohibited use. Visible notification appliances used to indicate unit smoke detection or building fire alarm activation shall not be used for any other purpose within the unit.

1006.5 Unit primary entrance. Communication features shall be provided at the unit primary entrance complying with Section 1006.5.

1006.5.1 Notification. A hard-wired electric doorbell shall be provided. A button or switch shall be provided on the public side of the unit primary entrance. Activation of the button or switch shall initiate an audible tone within the unit.

1006.5.2 Identification. A means for visually identifying a visitor without opening the unit entry door shall be provided. Peepholes, where used, shall provide a minimum 180-degree range of view.

1006.6 Site, building, or floor entrance. Where a system permitting voice communication between a visitor and the occupant of the unit is provided at a location other than the unit entry door, the system shall comply with Section 1006.6.

1006.6.1 Public or common-use interface. The public or common-use system interface shall include the capability of supporting voice and TTY communication with the unit interface. When requested to be provided by a unit occupant, the cost of providing the public or common-use component of the voice and TTY interface shall not be borne by the unit occupant.

1006.6.2 Unit interface. The unit system interface shall include a telephone jack capable of supporting voice and TTY communication with the public or common-use system interface.

1006.7 Closed-circuit communication systems. Where a closed-circuit communication system is provided, the public or common-use system interface shall comply with Section 1006.6.1, and the unit system interface in units required to have accessible communication features shall comply with Section 1006.6.2.

INTERNATIONAL CODE COUNCIL®
Copyright © 2014 ICC. ALL RIGHTS RESERVED. Accessed by William Munson on Jan 4, 2017 9:33:41 PM pursuant to License Agreement with ICC. No further reproduction or distribution authorized. ANY UNAUTHORIZED REPRODUCTION OR DISTRIBUTION IS A VIOLATION OF THE FEDERAL COPYRIGHT ACT AND THE LICENSE AGREEMENT, AND SUBJECT TO CIVIL AND CRIMINAL PENALTIES THEREUNDER.

INTERNATIONAL CODE COUNCIL®
Copyright © 2014 ICC. ALL RIGHTS RESERVED. Accessed by William Munson on Jan 4, 2017 9:33:41 PM pursuant to License Agreement with ICC. No further reproduction or distribution authorized. ANY UNAUTHORIZED REPRODUCTION OR DISTRIBUTION IS A VIOLATION OF THE FEDERAL COPYRIGHT ACT AND THE LICENSE AGREEMENT, AND SUBJECT TO CIVIL AND CRIMINAL PENALTIES THEREUNDER.

CHAPTER 11
RECREATIONAL FACILITIES

SECTION 1101
GENERAL

1101.1 Scope. Recreational facilities required to be accessible by the scoping provisions adopted by the administrative authority shall comply with the applicable provisions of Chapter 11.

1101.2 Special provisions.

1101.2.1 General exceptions. The following shall not be required to be accessible or to be on an accessible route:

1. Raised structures used solely for refereeing, judging, or scoring a sport.
2. Water Slides.
3. Animal containment areas that are not for public use.
4. Raised boxing or wrestling rings.
5. Raised diving boards and diving platforms.
6. Bowling lanes that are not required to provide wheelchair spaces.
7. Mobile or portable amusement rides
8. Amusement rides that are controlled or operated by the rider.
9. Amusement rides designed primarily for children, where children are assisted on and off the ride by an adult.
10. Amusement rides that do not provide amusement ride seats.

1101.2.2 Area of sport activity. Areas of sport activity shall be served by an accessible route and shall not be required to be accessible except as provided in Chapter 11.

1101.2.3 Recreational boating facilities. Operable parts of cleats and other boat securement devices shall not be required to comply with Section 308.

1101.2.4 Exercise machines and equipment. Exercise machines and exercise equipment shall not be required to comply with Section 309.

1101.3 Protruding objects. Protruding objects on circulation paths shall comply with Section 307.

Exceptions:

1. Within areas of sport activity, protruding objects on circulation paths shall not be required to comply with Section 307.
2. Within play areas, protruding objects on circulation paths shall not be required to comply with Section 307 provided that ground level accessible routes provide vertical clearance complying with Section 1108.2.

SECTION 1102
AMUSEMENT RIDES

1102.1 General. Accessible amusement rides shall comply with Section 1102.

1102.2 Accessible routes. Accessible routes serving amusement rides shall comply with Chapter 4.

Exceptions:

1. In load or unload areas and on amusement rides, where complying with Section 405.2 is not structurally or operationally feasible, ramp slope shall be permitted to be 1:8 maximum.
2. In load or unload areas and on amusement rides, handrails provided along walking surfaces complying with Section 403 and required on ramps complying with Section 405 shall not be required to comply with Section 505 where complying is not structurally or operationally feasible.

1102.3 Load and unload areas. A turning space complying with Sections 304.2 and 304.3 shall be provided in load and unload areas.

1102.4 Wheelchair spaces in amusement rides. Wheelchair spaces in amusement rides shall comply with Section 1102.4.

1102.4.1 Floor surface. The floor surface of wheelchair spaces shall be stable and firm.

1102.4.2 Slope. The floor surface of wheelchair spaces shall have a slope not steeper than 1:48 when in the load and unload position.

1102.4.3 Gaps. Floors of amusement rides with wheelchair spaces and floors of load and unload areas shall be coordinated so that, when amusement rides are at rest in the load and unload position, the vertical difference between the floors shall be within plus or minus $^{5}/_{8}$ inch (16 mm) and the horizontal gap shall be 3 inches (75 mm) maximum under normal passenger load conditions.

Exception: Where complying is not operationally or structurally feasible, ramps, bridge plates, or similar devices complying with the applicable requirements of 36 CFR 1192.83(c), listed in Section 105.2.11, shall be provided.

1102.4.4 Clearances. Clearances for wheelchair spaces shall comply with Section 1102.4.4.

Exceptions:

1. Where provided, securement devices shall be permitted to overlap required clearances.
2. Wheelchair spaces shall be permitted to be mechanically or manually repositioned.
3. Wheelchair spaces shall not be required to comply with Section 307.4.

INTERNATIONAL CODE COUNCIL®
Copyright © 2014 ICC. ALL RIGHTS RESERVED. Accessed by William Munson on Jan 4, 2017 9:33:41 PM pursuant to License Agreement with ICC. No further reproduction or distribution authorized. ANY UNAUTHORIZED REPRODUCTION OR DISTRIBUTION IS A VIOLATION OF THE FEDERAL COPYRIGHT ACT AND THE LICENSE AGREEMENT, AND SUBJECT TO CIVIL AND CRIMINAL PENALTIES THEREUNDER.

1102.4.4.1 Width and length. Wheelchair spaces shall provide a clear width of 30 inches (760 mm) minimum and a clear length of 48 inches (1220 mm) minimum measured to 9 inches (230 mm) minimum above the floor.

1102.4.4.2 Side entry. Where wheelchair spaces are entered only from the side, amusement rides shall be designed to permit sufficient maneuvering clearance for individuals using a wheelchair or mobility aid to enter and exit the ride.

1102.4.4.3 Permitted protrusions in wheelchair spaces. Objects are permitted to protrude a distance of 6 inches (150 mm) maximum along the front of the wheelchair space, where located 9 inches (230 mm) minimum and 27 inches (685 mm) maximum above the floor of the wheelchair space. Objects are permitted to protrude a distance of 25 inches (635 mm) maximum along the front of the wheelchair space, where located more than 27 inches (685 mm) above the floor of the wheelchair space.

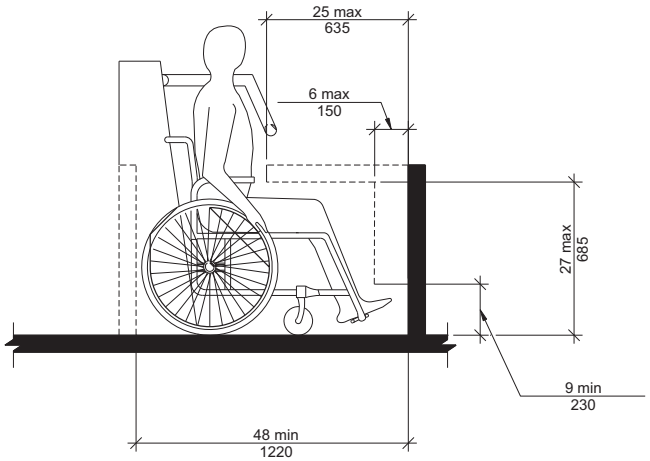

FIGURE 1102.4.4.3
PROTRUSIONS IN WHEELCHAIR SPACES IN AMUSEMENT RIDES

1102.4.5 Ride entry. Openings providing entry to wheelchair spaces on amusement rides shall provide a clear width of 32 inches (815 mm) minimum.

1102.4.6 Approach. One side of the wheelchair space shall adjoin an accessible route when in the load and unload position.

1102.4.7 Companion seats. Where the interior width of the amusement ride is greater than 53 inches (1345 mm), seating is provided for more than one rider, and the wheelchair is not required to be centered within the amusement ride, a companion seat shall be provided for each wheelchair space.

1102.4.7.1 Shoulder-to-shoulder seating. Where an amusement ride provides shoulder-to-shoulder seating, companion seats shall be shoulder-to-shoulder with the adjacent wheelchair space.

Exception: Where shoulder-to-shoulder companion seating is not operationally or structurally feasible, complying with this requirement shall be required to the maximum extent practicable.

1102.5 Amusement ride seats designed for transfer. Amusement ride seats designed for transfer shall comply with Section 1102.5 when positioned for loading and unloading.

1102.5.1 Clear floor space. A clear floor space complying with Section 305 shall be provided in the load and unload area adjacent to the amusement ride seats designed for transfer.

1102.5.2 Transfer height. The height of amusement ride seats designed for transfer shall be 14 inches (355 mm) minimum and 24 inches (610 mm) maximum measured from the surface of the load and unload area.

1102.5.3 Transfer entry. Where openings are provided for transfer to amusement ride seats, the openings shall provide clearance for transfer from a wheelchair or mobility aid to the amusement ride seat.

1102.5.4 Wheelchair storage space. Wheelchair storage spaces complying with Section 305 shall be provided in or adjacent to unload areas for each required amusement ride seat designed for transfer and shall not overlap any required means of egress or accessible route.

1102.6 Transfer devices for use with amusement rides. Transfer devices for use with amusement rides shall comply with Section 1102.6 when positioned for loading and unloading.

1102.6.1 Clear floor space. A clear floor space complying with Section 305 shall be provided in the load and unload area adjacent to the transfer device.

1102.6.2 Transfer height. The height of transfer device seats shall be 14 inches (355 mm) minimum and 24 inches (610 mm) maximum measured from the load and unload surface.

1102.6.3 Wheelchair storage space. Wheelchair storage spaces complying with Section 305 shall be provided in or adjacent to unload areas for each required transfer device and shall not overlap any required means of egress or accessible route.

SECTION 1103
RECREATIONAL BOATING FACILITIES

1103.1 General. Accessible recreational boating facilities shall comply with Section 1103.

1103.2 Accessible routes. Accessible routes serving recreational boating facilities, including gangways and floating piers, shall comply with Chapter 4 except as modified by the exceptions in Section 1103.2.

1103.2.1 Boat slips. An accessible route shall serve boat slips.

Exceptions:

1. Where an existing gangway or series of gangways is replaced or altered, an increase in the length of the gangway shall not be required to comply with Section 1103.2.

INTERNATIONAL CODE COUNCIL®
Copyright © 2014 ICC. ALL RIGHTS RESERVED. Accessed by William Munson on Jan 4, 2017 9:33:41 PM pursuant to License Agreement with ICC. No further reproduction or distribution authorized. ANY UNAUTHORIZED REPRODUCTION OR DISTRIBUTION IS A VIOLATION OF THE FEDERAL COPYRIGHT ACT AND THE LICENSE AGREEMENT, AND SUBJECT TO CIVIL AND CRIMINAL PENALTIES THEREUNDER.

2. Gangways shall not be required to comply with the maximum rise specified in Section 405.6.
3. Where the total length of a gangway or series of gangways serving as part of a required accessible route is 80 feet (24 m) minimum, gangways shall not be required to comply with Section 405.2.
4. Where facilities contain fewer than 25 boat slips and the total length of the gangway or series of gangways serving as part of a required accessible route is 30 feet (9145 mm) minimum, gangways shall not be required to comply with Section 405.2.
5. Where gangways connect to transition plates, landings specified by Section 405.7 shall not be required.
6. Where gangways and transition plates connect and are required to have handrails, handrail extensions shall not be required. Where handrail extensions are provided on gangways or transition plates, the handrail extensions shall not be required to be parallel with the floor.
7. The cross slope specified in Sections 403.3 and 405.3 for gangways, transition plates, and floating piers that are part of accessible routes shall be measured in the static position.
8. Changes in level complying with Sections 303.3 and 303.4 shall be permitted on the surfaces of gangways and boat launch ramps.
9. Cleats and other boat securement devices shall not be required to comply with Section 309.3.

1103.2.2 Boarding piers at boat launch ramps. An accessible route shall serve boarding piers.

Exceptions:

1. Accessible routes serving floating boarding piers shall be permitted to use Exceptions 1, 2, 5, 6, 7 and 8 in Section 1103.2.1.
2. Where the total length of the gangway or series of gangways serving as part of a required accessible route is 30 feet (9145 mm) minimum, gangways shall not be required to comply with Section 405.2.
3. Where the accessible route serving a floating boarding pier or skid pier is located within a boat launch ramp, the portion of the accessible route located within the boat launch ramp shall not be required to comply with Section 405.

1103.3 Clearances. Clearances at boat slips and on boarding piers at boat launch ramps shall comply with Section 1103.3.

1103.3.1 Boat slip clearance. Boat slips shall provide clear pier space 60 inches (1525 mm) minimum in width that extend the full length of the boat slips. Each 10 feet (3050 mm) of linear pier edge serving boat slips shall contain at least one continuous clear opening 60 inches (1525 mm) minimum in width.

Exceptions:

1. Clear pier space shall be permitted to be 36 inches (915 mm) minimum in width and 24 inches (610 mm) maximum in length, provided that multiple 36-inch (915 mm) wide segments

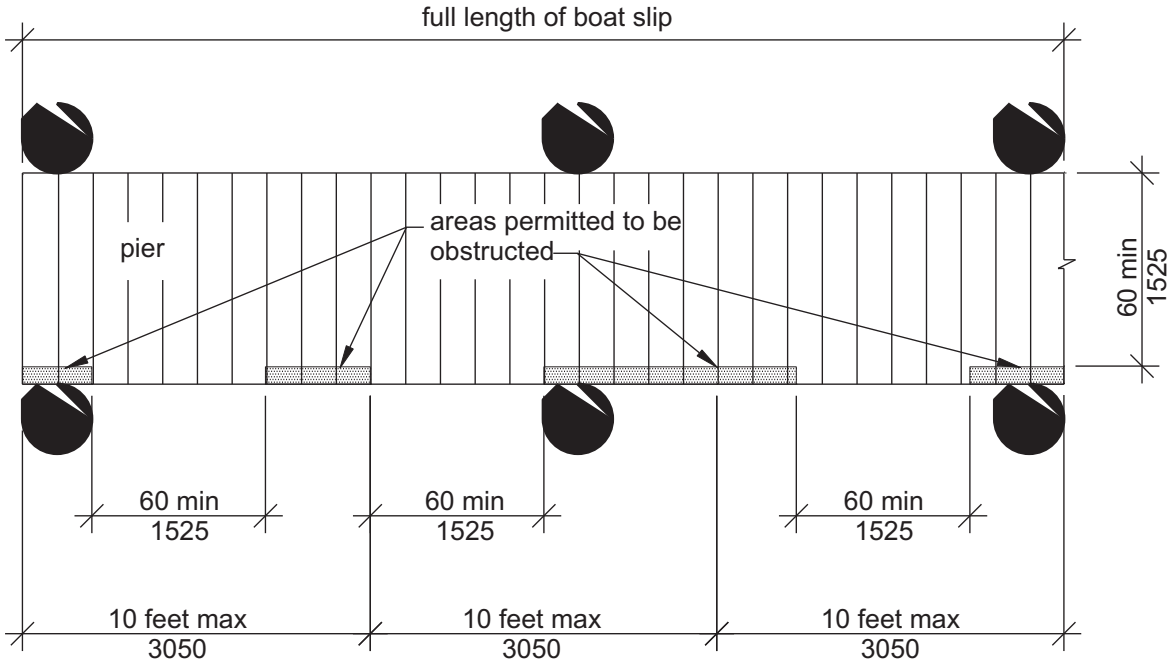

FIGURE 1103.3.1(A)
BOAT SLIP CLEARANCE

INTERNATIONAL CODE COUNCIL®
Copyright © 2014 ICC. ALL RIGHTS RESERVED. Accessed by William Munson on Jan 4, 2017 9:33:41 PM pursuant to License Agreement with ICC. No further reproduction or distribution authorized. ANY UNAUTHORIZED REPRODUCTION OR DISTRIBUTION IS A VIOLATION OF THE FEDERAL COPYRIGHT ACT AND THE LICENSE AGREEMENT, AND SUBJECT TO CIVIL AND CRIMINAL PENALTIES THEREUNDER.

are separated by segments that are 60 inches (1525 mm) minimum in width and 60 inches (1525 mm) minimum in length.

2. Edge protection shall be permitted at the continuous clear openings, provided the edge protection is 4 inches (100 mm) maximum in height and 2 inches (51 mm) maximum in width.
3. In existing piers, clear pier space shall be permitted to be located perpendicular to the boat slip and shall extend the width of the boat slip, where the facility has at least one boat slip complying with Section 1103.3, and further compliance with Section 1103.3 would result in a reduction in the number of boat slips available or result in a reduction of the widths of existing slips.

1103.3.2 Boarding pier clearances. Boarding piers at boat launch ramps shall provide clear pier space 60 inches (1525 mm) minimum in width and shall extend the full length of the boarding pier. Every 10 feet (3050 mm) of linear pier edge shall contain at least one continuous clear opening 60 inches (1525 mm) minimum in width.

Exceptions:

1. The clear pier space shall be permitted to be 36 inches (915 mm) minimum in width and 24 inches (610 mm) maximum in length provided that multiple 36-inch (915 mm) wide segments are separated by segments that are 60 inches (1525 mm) minimum in width and 60 inches (1525 mm) minimum in length.
2. Edge protection shall be permitted at the continuous clear openings provided the edge protection is 4 inches (100 mm) maximum in height and 2 inches (51 mm) maximum in width.

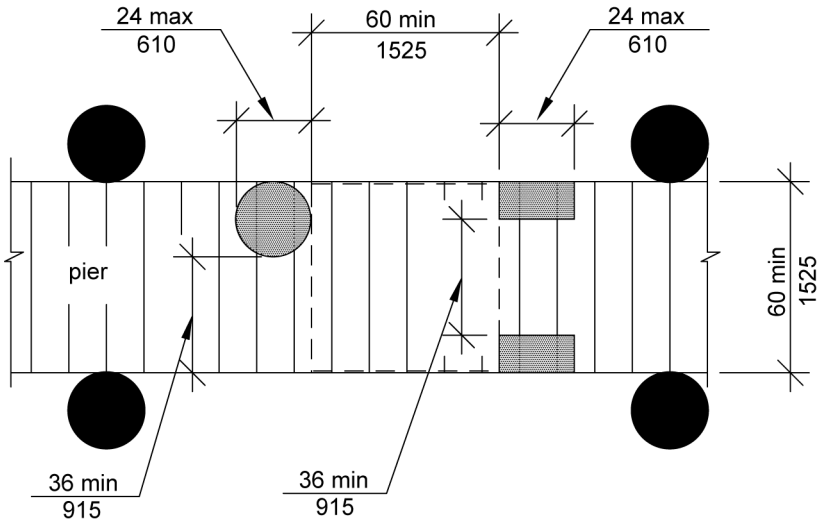

FIGURE 1103.3.1(B)
(EXCEPTION 1) CLEAR PIER SPACE REDUCTION AT BOAT SLIPS

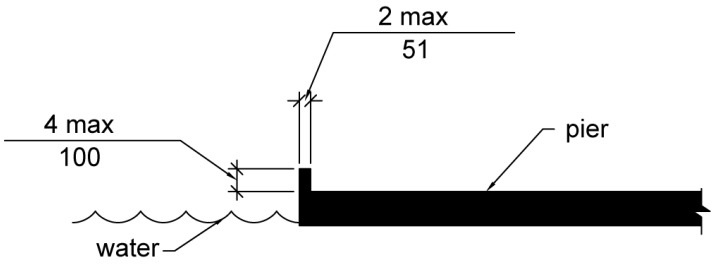

FIGURE 1103.3.1(C)
(EXCEPTION 2) EDGE PROTECTION AT BOAT SLIPS

INTERNATIONAL CODE COUNCIL®
Copyright © 2014 ICC. ALL RIGHTS RESERVED. Accessed by William Munson on Jan 4, 2017 9:33:41 PM pursuant to License Agreement with ICC. No further reproduction or distribution authorized. ANY UNAUTHORIZED REPRODUCTION OR DISTRIBUTION IS A VIOLATION OF THE FEDERAL COPYRIGHT ACT AND THE LICENSE AGREEMENT, AND SUBJECT TO CIVIL AND CRIMINAL PENALTIES THEREUNDER.

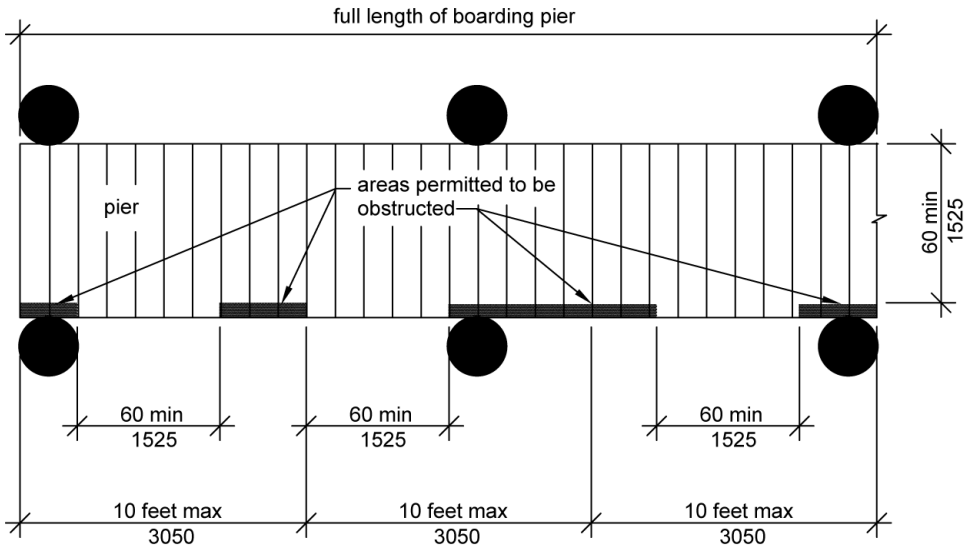

FIGURE 1103.3.2(A)
BOARDING PIER CLEARANCE

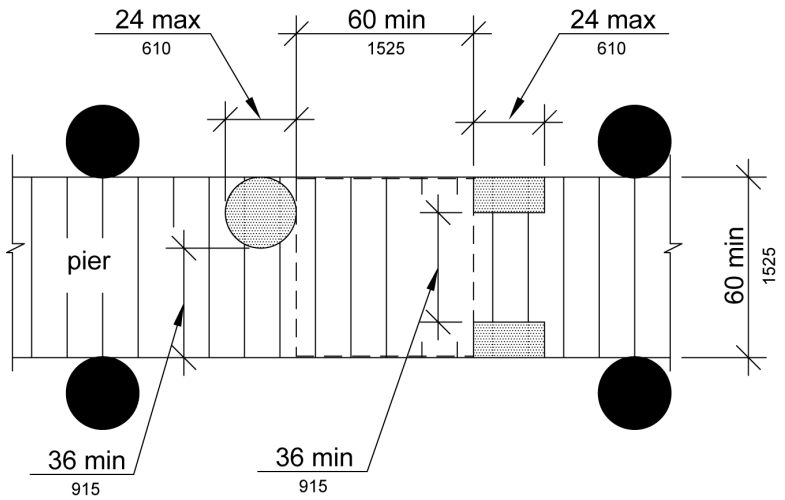

FIGURE 1103.3.2(B)
(EXCEPTION 1) CLEAR PIER SPACE REDUCTION AT BOARDING PIERS

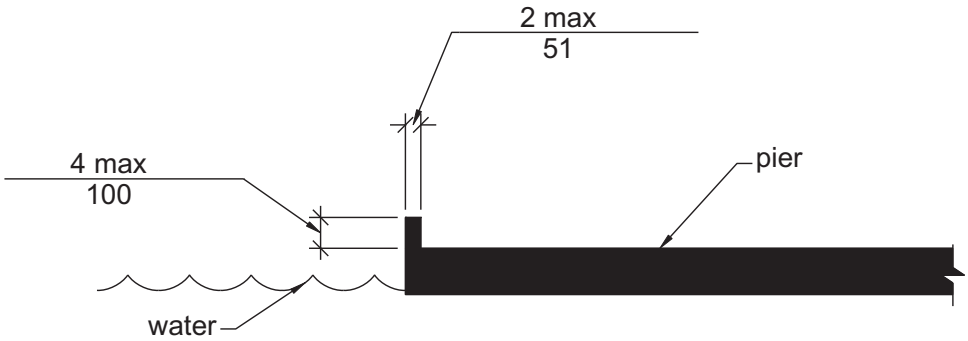

FIGURE 1103.3.2(C)
(EXCEPTION 2) EDGE PROTECTION AT BOARDING PIERS

INTERNATIONAL CODE COUNCIL®
Copyright © 2014 ICC. ALL RIGHTS RESERVED. Accessed by William Munson on Jan 4, 2017 9:33:41 PM pursuant to License Agreement with ICC. No further reproduction or distribution authorized. ANY UNAUTHORIZED REPRODUCTION OR DISTRIBUTION IS A VIOLATION OF THE FEDERAL COPYRIGHT ACT AND THE LICENSE AGREEMENT, AND SUBJECT TO CIVIL AND CRIMINAL PENALTIES THEREUNDER.

SECTION 1104
EXERCISE MACHINES AND EQUIPMENT

1104.1 Clear floor space. Accessible exercise machines and equipment shall have a clear floor space complying with Section 305 positioned for transfer or for use by an individual seated in a wheelchair. Clear floor spaces required at exercise machines and equipment shall be permitted to overlap.

SECTION 1105
FISHING PIERS AND PLATFORMS

1105.1 Accessible routes. Accessible routes serving fishing piers and platforms, including gangways and floating piers, shall comply with Chapter 4.

Exceptions:

1. Accessible routes serving floating fishing piers and platforms shall be permitted to use Exceptions 1, 2, 5, 6, 7 and 8 in Section 1103.2.1.
2. Where the total length of the gangway or series of gangways serving as part of a required accessible route is 30 feet (9145 mm) minimum, gangways shall not be required to comply with Section 405.2.

1105.2 Railings. Where provided, railings, guards, or handrails shall comply with Section 1105.2.

1105.2.1 Height. A minimum of 25 percent of the railings, guards, or handrails shall be 34 inches (865 mm) maximum above the ground or deck surface.

Exception: Where a guard complying with the applicable building code is provided, the guard shall not be required to comply with Section 1105.2.1.

1105.2.1.1 Dispersion. Railings, guards, or handrails required to comply with Section 1105.2.1 shall be dispersed throughout the fishing pier or platform.

1105.3 Edge protection. Where railings, guards, or handrails complying with Section 1105.2 are provided, edge protection complying with Section 1105.3.1 or 1105.3.2 shall be provided.

1105.3.1 Curb or barrier. Curbs or barriers shall extend 2 inches (51 mm) minimum in height above the surface of the fishing pier or platform.

1105.3.2 Extended ground or deck surface. The ground or deck surface shall extend 12 inches (305 mm) minimum beyond the inside face of the railing. Toe clearance shall be provided and shall be 30 inches (760 mm) minimum in width and 9 inches (230 mm) minimum in height above the ground or deck surface beyond the railing.

1105.4 Clear floor space. At each location where there are railings, guards, or handrails complying with Section 1105.2.1, a clear floor space complying with Section 305 shall be provided. Where there are no railings, guards, or handrails, at least one clear floor space complying with Section 305 shall be provided on the fishing pier or platform.

1105.5 Turning space. At least one turning space complying with Section 304.3 shall be provided on fishing piers and platforms.

SECTION 1106
GOLF FACILITIES

1106.1 General. Golf facilities shall comply with Section 1106.

1106.2 Accessible routes. Accessible routes serving teeing grounds, practice teeing grounds, putting greens, practice putting greens, teeing stations at driving ranges, course weather shelters, golf car rental areas, bag drop areas, and course toilet rooms shall comply with Chapter 4 and shall be 48 inches (1220 mm) minimum in width. Where handrails are provided, accessible routes shall be 60 inches (1525 mm) minimum in width.

Exception: Handrails shall not be required on golf courses. Where handrails are provided on golf courses, the handrails shall not be required to comply with Section 505.

1106.3 Golf car passages. Golf car passages shall comply with Section 1106.3.

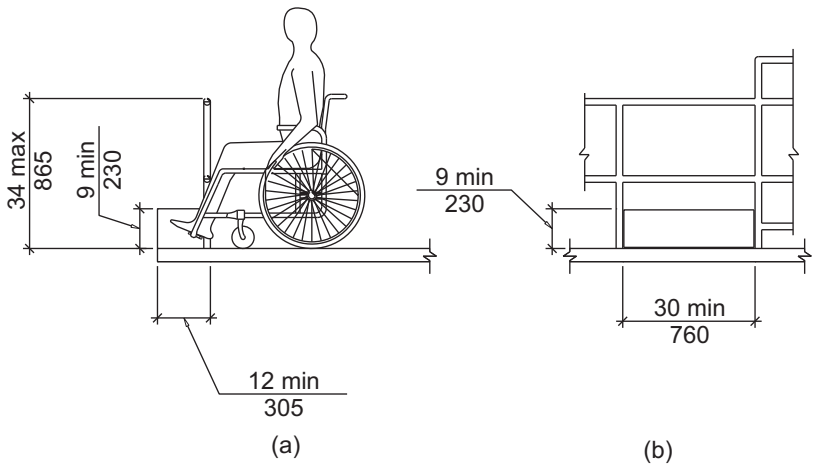

FIGURE 1105.3.2
EXTENDED GROUND OR DECK SURFACE AT FISHING PIERS AND PLATFORMS

INTERNATIONAL CODE COUNCIL®
Copyright © 2014 ICC. ALL RIGHTS RESERVED. Accessed by William Munson on Jan 4, 2017 9:33:41 PM pursuant to License Agreement with ICC. No further reproduction or distribution authorized. ANY UNAUTHORIZED REPRODUCTION OR DISTRIBUTION IS A VIOLATION OF THE FEDERAL COPYRIGHT ACT AND THE LICENSE AGREEMENT, AND SUBJECT TO CIVIL AND CRIMINAL PENALTIES THEREUNDER.

1106.3.1 Clear width. The clear width of golf car passages shall be 48 inches (1220 mm) minimum.

1106.3.2 Barriers. Where curbs or other constructed barriers prevent golf cars from entering a fairway, openings 60 inches (1525 mm) minimum in width shall be provided at intervals not to exceed 75 yards (69 m).

1106.4 Weather shelters. A clear floor space 60 inches (1525 mm) minimum by 96 inches (2440 mm) minimum shall be provided within weather shelters.

SECTION 1107
MINIATURE GOLF FACILITIES

1107.1 General. Miniature golf facilities shall comply with Section 1107.

1107.2 Accessible routes. Accessible routes serving holes on miniature golf courses shall comply with Chapter 4.

Exception: Accessible routes located on playing surfaces of miniature golf holes shall be permitted to comply with the following:

1. Playing surfaces shall not be required to comply with Section 302.2.
2. Where accessible routes intersect playing surfaces of holes, a curb that is 1 inch (25 mm) maximum in height and 32 inches (815 mm) minimum in width shall be permitted.
3. A slope of 1:4 maximum shall be permitted for a rise of 4 inches (100 mm) maximum.
4. Ramp landing slopes specified by Section 405.7.1 shall be permitted to be 1:20 maximum.
5. Ramp landing length specified by Section 405.7.3 shall be permitted to be 48 inches (1220 mm) minimum.
6. Ramp landing size at a change in direction specified by Section 405.7.4 shall be permitted to be 48 inches (1220 mm) minimum by 60 inches (1525 mm) minimum.
7. Handrails shall not be required on holes. Where handrails are provided on holes, the handrails shall not be required to comply with Section 505.

1107.3 Miniature golf holes. Miniature golf holes shall comply with Section 1107.3.

1107.3.1 Start of play. A clear floor space 48 inches (1220 mm) minimum by 60 inches (1525 mm) minimum with slopes not steeper than 1:48 shall be provided at the start of play.

1107.3.2 Golf club reach range area. All areas within holes where golf balls rest shall be within 36 inches (915 mm) maximum of a clear floor space 36 inches (915 mm) minimum in width and 48 inches (1220 mm) minimum in length having a running slope not steeper than 1:20. The clear floor space shall be served by an accessible route.

SECTION 1108
PLAY AREAS

1108.1 Scope. Play areas shall comply with 1108.

1108.2 Accessible routes for play areas. Play areas shall provide accessible routes in accordance with Section 1108.2. Accessible routes serving play areas shall comply with Chapter 4 except as modified by Section 1108.4.

1108.2.1 Ground level and elevated play components. At least one accessible route shall be provided within the play area. The accessible route shall connect ground level play components required to comply with Section 1108.3.2.1 and elevated play components required to comply with Section 1108.3.2.2, including entry and exit points of the play components.

1108.2.2 Soft contained play structures. Where three or fewer entry points are provided for soft contained play structures, at least one entry point shall be on an accessible route. Where four or more entry points are provided for

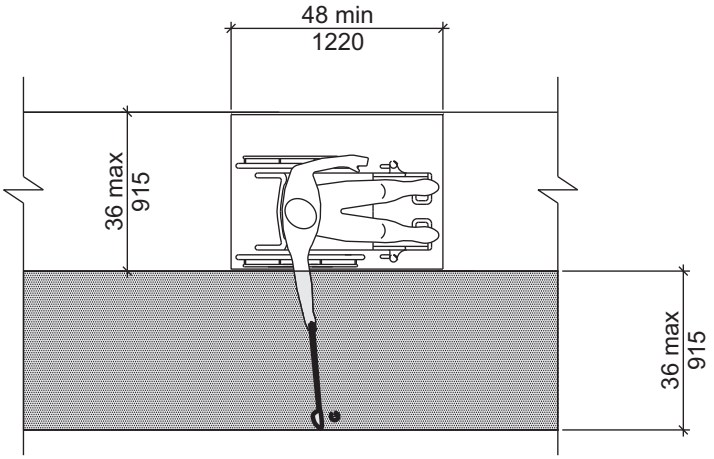

Note: Running Slope of Clear Floor or Ground Space Not Steeper Than 1:20

FIGURE 1107.3.2
GOLF CLUB REACH RANGE AREA

INTERNATIONAL CODE COUNCIL®
Copyright © 2014 ICC. ALL RIGHTS RESERVED. Accessed by William Munson on Jan 4, 2017 9:33:41 PM pursuant to License Agreement with ICC. No further reproduction or distribution authorized. ANY UNAUTHORIZED REPRODUCTION OR DISTRIBUTION IS A VIOLATION OF THE FEDERAL COPYRIGHT ACT AND THE LICENSE AGREEMENT, AND SUBJECT TO CIVIL AND CRIMINAL PENALTIES THEREUNDER.

soft contained play structures, at least two entry points shall be on an accessible route.

1108.3 Age groups. Play areas for children ages 2 and over shall comply with Section 1108.3. Where separate play areas are provided within a site for specific age groups, each play area shall comply with Section 1108.3.

Exceptions:

1. Play areas located in family child care facilities where the proprietor actually resides shall not be required to comply with Section 1108.3.
2. In existing play areas, where play components are relocated for the purposes of creating safe use zones and the ground surface is not altered or extended for more than one use zone, the play area shall not be required to comply with Section 1108.3.
3. Amusement attractions shall not be required to comply with Section 1108.3.
4. Where play components are altered and the ground surface is not altered, the ground surface shall not be required to comply with Section 1108.4.1.6 unless required by the authority having jurisdiction.

1108.3.1 Additions. Where play areas are designed and constructed in phases, the requirements of Section 1108.3 shall apply to each successive addition so that when the addition is completed, the entire play area complies with all the applicable requirements of Section 1108.3.

1108.3.2 Play components. Where provided, play components shall comply with Section 1108.3.2.

1108.3.2.1 Ground level play components. Ground level play components shall be provided in the number and types required by Section 1108.3.2.1. Ground level play components that are provided to comply with Section 1108.3.2.1.1 shall be permitted to satisfy the additional number required by Section 1108.3.2.1.2 if the minimum required types of play components are satisfied. Where two or more required ground level play components are provided, they shall be dispersed throughout the play area and integrated with other play components.

1108.3.2.1.1 Minimum number and types. Where ground level play components are provided, at least one of each type shall be on an accessible route and shall comply with Section 1108.4.3.

1108.3.2.1.2 Additional number and types. Where elevated play components are provided, ground level play components shall be provided in accordance with Table 1108.3.2.1.2 and shall comply with Section 1108.4.3.

Exception: If at least 50 percent of the elevated play components are connected by a ramp and at least 3 of the elevated play components connected by the ramp are different types of play components, the play area shall not be required to comply with Section 1108.3.2.1.2.

1108.3.2.2 Elevated play components. Where elevated play components are provided, at least 50 percent shall be on an accessible route and shall comply with Section 1108.4.3.

1108.4 Accessible routes within play areas. Play areas shall comply with Section 1108.4.

1108.4.1 Accessible routes. Accessible routes serving play areas shall comply with Chapter 4 and Section 1108.4.1 and shall be permitted to use the exceptions in Sections 1108.4.1.1 through 1108.4.1.3. Where accessible routes serve ground level play components, the vertical clearance shall be 80 inches (2030 mm) minimum in height.

1108.4.1.1 Ground level and elevated play components. Accessible routes serving ground level play components and elevated play components shall be permitted to use the exceptions in Section 1108.4.1.1.

Exceptions:

1. Transfer systems complying with Section 1108.4.2 shall be permitted to connect elevated play components except where 20 or

TABLE 1108.3.2.1.2
NUMBER AND TYPES OF GROUND LEVEL PLAY COMPONENTS REQUIRED TO BE ON ACCESSIBLE ROUTES

NUMBER OF ELEVATED PLAY COMPONENTS PROVIDED	MINIMUM NUMBER OF GROUND LEVEL PLAY COMPONENTS REQUIRED TO BE ON AN ACCESSIBLE ROUTE	MINIMUM NUMBER OF GROUND LEVEL PLAY COMPONENTS REQUIRED TO BE ON AN ACCESSIBLE ROUTE
1	Not applicable	Not applicable
2 to 4	1	1
5 to 7	2	2
8 to 10	3	3
11 to 13	4	3
14 to 16	5	3
17 to 19	6	3
22 to 22	7	4
23 to 25	8	4
26 and over	8, plus 1 for each additional 3, or fraction thereof, over 25	5

INTERNATIONAL CODE COUNCIL®
Copyright © 2014 ICC. ALL RIGHTS RESERVED. Accessed by William Munson on Jan 4, 2017 9:33:41 PM pursuant to License Agreement with ICC. No further reproduction or distribution authorized. ANY UNAUTHORIZED REPRODUCTION OR DISTRIBUTION IS A VIOLATION OF THE FEDERAL COPYRIGHT ACT AND THE LICENSE AGREEMENT, AND SUBJECT TO CIVIL AND CRIMINAL PENALTIES THEREUNDER.

more elevated play components are provided no more than 25 percent of the elevated play components shall be permitted to be connected by transfer systems.

2. Where transfer systems are provided, an elevated play component shall be permitted to connect to another elevated play component as part of an accessible route.

1108.4.1.2 Soft contained play structures. Accessible routes serving soft contained play structures shall be permitted to use the exception in Section 1108.4.1.2.

Exception: Transfer systems complying with Section 1108.4.2 shall be permitted to be used as part of an accessible route.

1108.4.1.3 Water play components. Accessible routes serving water play components shall be permitted to use the exceptions in Section 1108.4.1.3.

Exceptions:

1. Where the surface of the accessible route, clear floor spaces, or turning spaces serving water play components is submerged, complying with Sections 302, 403.3, 405.2, 405.3, and 1108.4.1.6 shall not be required.
2. Transfer systems complying with Section 1108.4.2 shall be permitted to connect elevated play components in water.

1108.4.1.4 Clear width. Accessible routes connecting play components shall provide a clear width complying with Section 1108.4.1.4.

1108.4.1.4.1 Ground level. At ground level, the clear width of accessible routes shall be 60 inches (1525 mm) minimum.

Exceptions:

1. In play areas less than 1000 square feet (93 m^2), the clear width of accessible routes shall be permitted to be 44 inches (1120 mm) minimum, if at least one turning space complying with Section 304.3 is provided where the restricted accessible route exceeds 30 feet (9145 mm) in length.
2. The clear width of accessible routes shall be permitted to be 36 inches (915 mm) minimum for a distance of 60 inches (1525 mm) maximum provided that multiple reduced width segments are separated by segments that are 60 inches (1525 mm) minimum in width and 60 inches (1525 mm) minimum in length.

1108.4.1.4.2 Elevated. The clear width of accessible routes connecting elevated play components shall be 36 inches (915 mm) minimum.

Exceptions:

1. The clear width of accessible routes connecting elevated play components shall be permitted to be reduced to 32 inches (815 mm) minimum for a distance of 24 inches (610 mm) maximum provided that reduced width segments are separated by segments that are 48 inches (1220 mm) minimum in length and 36 inches (915 mm) minimum in width.
2. The clear width of transfer systems connecting elevated play components shall be permitted to be 24 inches (610 mm) minimum.

1108.4.1.5 Ramps. Within play areas, ramps connecting ground level play components and ramps connecting elevated play components shall comply with Section 1108.4.1.5.

1108.4.1.5.1 Ground level. Ramp runs connecting ground level play components shall have a running slope not steeper than 1:16.

1108.4.1.5.2 Elevated. The rise for any ramp run connecting elevated play components shall be 12 inches (305 mm) maximum.

1108.4.1.5.3 Handrails. Where required on ramps serving play components, the handrails shall comply with Section 505 except as modified by Section 1108.4.1.5.3.

Exceptions:

1. Handrails shall not be required on ramps located within ground level use zones.
2. Handrail extensions shall not be required.

1108.4.1.5.3.1 Handrail gripping surfaces. Handrail gripping surfaces with a circular cross section shall have an outside diameter of 0.95 inch (24 mm) minimum and 1.55 inches (39 mm) maximum. Where the shape of the gripping surface is noncircular, the handrail shall provide an equivalent gripping surface.

1108.4.1.5.3.2 Handrail height. The top of handrail gripping surfaces shall be 20 inches (510 mm) minimum and 28 inches (710 mm) maximum above the ramp surface.

1108.4.1.6 Ground surfaces. Ground surfaces on accessible routes, clear floor spaces, and turning spaces shall comply with Section 1108.4.1.6.

1108.4.1.6.1 Surface condition. Ground surfaces shall be stable, firm and slip resistant. Ground surfaces shall be inspected and maintained regularly and frequently to ensure continued compliance with this requirement.

1108.4.1.6.2 Use zones. Ground surfaces located within use zones shall comply with ASTM F 1292 listed in Sections 105.2.8 or 105.2.9.

1108.4.2 Transfer systems. Where transfer systems are provided to connect to elevated play components, the transfer systems shall comply with Section 1108.4.2.

1108.4.2.1 Transfer platforms. Transfer platforms shall be provided where transfer is intended from

INTERNATIONAL CODE COUNCIL®
Copyright © 2014 ICC. ALL RIGHTS RESERVED. Accessed by William Munson on Jan 4, 2017 9:33:41 PM pursuant to License Agreement with ICC. No further reproduction or distribution authorized. ANY UNAUTHORIZED REPRODUCTION OR DISTRIBUTION IS A VIOLATION OF THE FEDERAL COPYRIGHT ACT AND THE LICENSE AGREEMENT, AND SUBJECT TO CIVIL AND CRIMINAL PENALTIES THEREUNDER.

wheelchairs or other mobility aids. Transfer platforms shall comply with Section 1108.4.2.1.

1108.4.2.1.1 Size. Transfer platforms shall have level surfaces 14 inches (355 mm) minimum in depth and 24 inches (610 mm) minimum in width.

1108.4.2.1.2 Height. The top of the transfer platforms shall be 11 inches (280 mm) minimum and 18 inches (455 mm) maximum in height above the floor.

1108.4.2.1.3 Transfer space. A transfer space complying with Sections 305.2 and 305.3 shall be provided adjacent to the transfer platform. The 48-inch (1220 mm) minimum length dimension of the transfer space shall be centered on and parallel to the 24-inch (610 mm) minimum length side of the transfer platform. The side of the transfer platform serving the transfer space shall be unobstructed.

1108.4.2.1.4 Transfer supports. At least one means of support for transferring shall be provided.

1108.4.2.2 Transfer steps. Transfer steps shall be provided where movement is intended from transfer platforms to levels with elevated play components required to be on accessible routes. Transfer steps shall comply with Section 1108.4.2.2.

1108.4.2.2.1 Size. Transfer steps shall have level surfaces 14 inches (355 mm) minimum in depth and 24 inches (610 mm) minimum in width.

1108.4.2.2.2 Height. Each transfer step shall be 8 inches (205 mm) maximum in height.

1108.4.2.2.3 Transfer supports. At least one means of support for transferring shall be provided.

1108.4.3 Play components. Ground level play components on accessible routes and elevated play components connected by ramps shall comply with Section 1108.4.3.

1108.4.3.1 Turning space. At least one turning space complying with Section 304 shall be provided on the same level as play components. Where swings are provided, the turning space shall be located immediately adjacent to the swing.

1108.4.3.2 Clear floor space. Clear floor space complying with Sections 305.2 and 305.3 shall be provided at play components.

1108.4.3.3 Play tables. Where play tables are provided, knee clearance 24 inches (610 mm) minimum in height, 17 inches (430 mm) minimum in depth, and 30 inches (760 mm) minimum in width shall be provided. The tops of rims, curbs, or other obstructions shall be 31 inches (785 mm) maximum in height.

Exception: Play tables designed and constructed primarily for children 5 years and younger shall not be required to provide knee clearance where the clear floor space required by Section 1108.4.3.2 is arranged for a parallel approach.

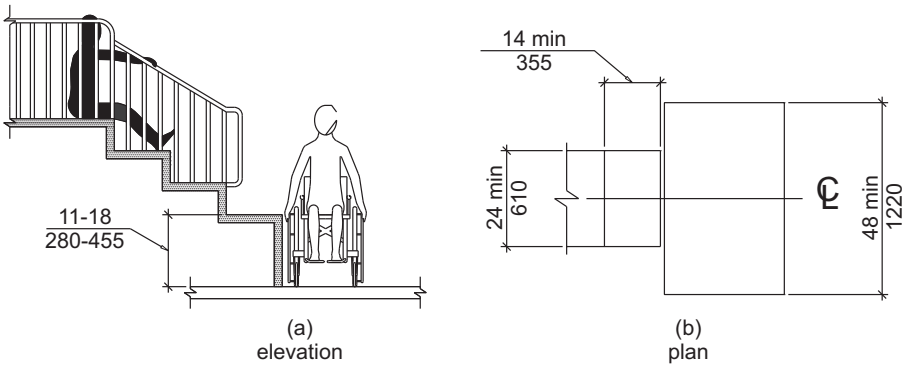

FIGURE 1108.4.2.1
TRANSFER PLATFORMS

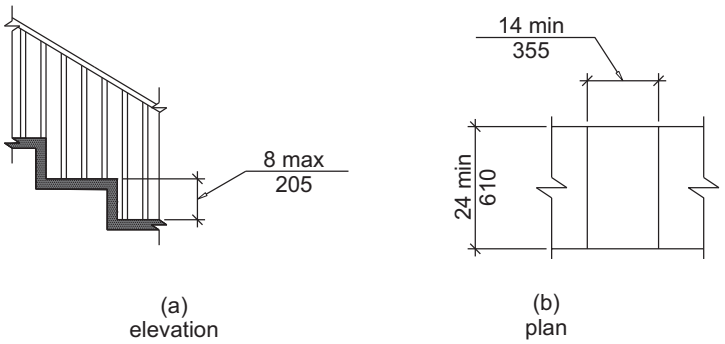

FIGURE 1108.4.2.2
TRANSFER STEPS

INTERNATIONAL CODE COUNCIL®
Copyright © 2014 ICC. ALL RIGHTS RESERVED. Accessed by William Munson on Jan 4, 2017 9:33:41 PM pursuant to License Agreement with ICC. No further reproduction or distribution authorized. ANY UNAUTHORIZED REPRODUCTION OR DISTRIBUTION IS A VIOLATION OF THE FEDERAL COPYRIGHT ACT AND THE LICENSE AGREEMENT, AND SUBJECT TO CIVIL AND CRIMINAL PENALTIES THEREUNDER.

1108.4.3.4 Entry points and seats. Where play components require transfer to entry points or seats, the entry points or seats shall be 11 inches (280 mm) minimum and 24 inches (610 mm) maximum from the clear floor space.

Exception: Entry points of slides shall not be required to comply with Section 1108.4.3.4.

1108.4.3.5 Transfer supports. Where play components require transfer to entry points or seats, at least one means of support for transferring shall be provided.

SECTION 1109
SWIMMING POOLS, WADING POOLS, HOT TUBS AND SPAS

1109.1 General. Swimming pools, wading pools, hot tubs and spas shall comply with Section 1109.

1109.1.1 Swimming pools. At least two accessible means of entry shall be provided for swimming pools. Accessible means of entry shall be swimming pool lifts complying with Section 1109.2; sloped entries complying with Section 1109.3; transfer walls complying with Section 1109.4, transfer systems complying with Section 1109.5; and pool stairs complying with Section 1109.6. At least one accessible means of entry provided shall comply with Section 1109.2 or 1109.3

Exceptions:

1. Where a swimming pool has less than 300 linear feet (91 m) of swimming pool wall, no more than one accessible means of entry shall be required.
2. Wave action pools, leisure rivers, sand bottom pools, and other pools where user access is limited to one area shall not be required to provide more than one accessible means of entry provided that the accessible means of entry is a swimming pool lift complying with Section 1109.2, a sloped entry complying with Section 1109.3, or a transfer system complying with Section 1109.5.
3. Catch pools shall not be required to provide an accessible means of entry provided that the catch pool edge is on an accessible route.

1109.1.2 Wading pools. At least one sloped entry complying with Section 1109.3 shall be provided in wading pools.

1109.1.3 Hot tubs and spas. At least one accessible means of entry shall be provided for hot tubs and spas. Accessible means of entry shall comply with swimming pool lifts complying with Section 1109.2; transfer walls complying with Section 1109.4; or transfer systems complying with Section 1109.5.

Exception: Where hot tubs or spas are provided in a cluster, no more than 5 percent, but not less than one hot tub or spa in each cluster shall be required to comply with Section 1109.1.3.

1109.2 Pool lifts. Pool lifts shall comply with Section 1109.2.

1109.2.1 Pool lift location. Pool lifts shall be located where the water level does not exceed 48 inches (1220 mm).

Exceptions:

1. Where the entire pool depth is greater than 48 inches (1220 mm), compliance with Section 1109.2.1 shall not be required.
2. Where multiple pool lift locations are provided, no more than one pool lift shall be required to be located in an area where the water level is 48 inches (1220 mm) maximum.

1109.2.2 Seat location. In the raised position, the centerline of the seat shall be located over the deck and 16 inches (405 mm) minimum from the edge of the pool. The deck surface between the centerline of the seat and the pool edge shall have a slope not steeper than 1:48.

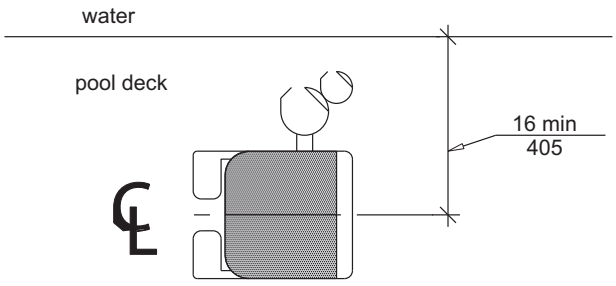

FIGURE 1109.2.2
POOL LIFT SEAT LOCATION

1109.2.3 Clear deck space. On the side of the seat opposite the water, a clear deck space shall be provided parallel with the seat. The space shall be 36 inches (915 mm) minimum in width and shall extend forward 48 inches (1220 mm) minimum from a line located 12 inches (305 mm) behind the rear edge of the seat. The clear deck space shall have a slope not steeper than 1:48.

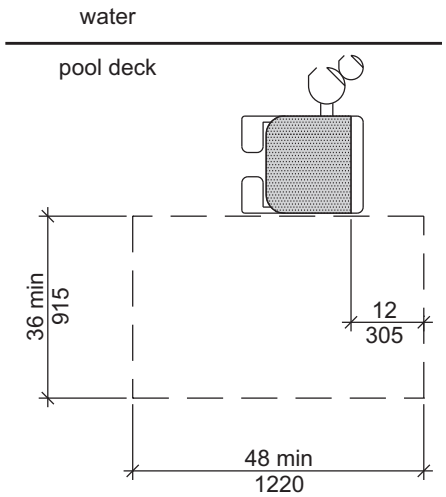

FIGURE 1109.2.3
CLEAR DECK SPACE AT POOL LIFTS

INTERNATIONAL CODE COUNCIL®
Copyright © 2014 ICC. ALL RIGHTS RESERVED. Accessed by William Munson on Jan 4, 2017 9:33:41 PM pursuant to License Agreement with ICC. No further reproduction or distribution authorized. ANY UNAUTHORIZED REPRODUCTION OR DISTRIBUTION IS A VIOLATION OF THE FEDERAL COPYRIGHT ACT AND THE LICENSE AGREEMENT, AND SUBJECT TO CIVIL AND CRIMINAL PENALTIES THEREUNDER.

1109.2.4 Seat height. The height of the lift seat shall be designed to allow a stop at 16 inches (405 mm) minimum and 19 inches (485 mm) maximum measured from the deck to the top of the seat surface when in the raised (load) position.

1109.2.5 Seat. The seat shall be 16 inches (405 mm) minimum in width, provide a back rest, and be of a firm and stable design.

1109.2.6 Footrests and armrests. Footrests shall be provided and shall move with the seat. If provided, the armrest positioned opposite the water shall be removable or shall fold clear of the seat when the seat is in the raised (load) position.

Exception: Footrests shall not be required on pool lifts provided in spas.

1109.2.7 Operation. The lift shall be capable of unassisted operation from both the deck and water levels. Controls and operating mechanisms shall be unobstructed when the lift is in use and shall comply with Section 309.4.

1109.2.8 Submerged depth. The lift shall be designed so that the seat will submerge to a water depth of 18 inches (455 mm) minimum below the stationary water level.

1109.2.9 Lifting capacity. Single person pool lifts shall have a weight capacity of 300 pounds (136 kg) minimum and be capable of sustaining a static load of at least one and a half times the rated load.

1109.3 Sloped entries. Sloped entries shall comply with Section 1109.3.

1109.3.1 Sloped entry route. Sloped entries shall comply with Chapter 4 except as modified by Sections 1109.3.1 through 1109.3.3.

Exception: Where sloped entries are provided, the surfaces shall not be required to be slip resistant.

1109.3.2 Submerged depth. Sloped entries for swimming pools shall comply with Section 1109.3.2.1. Sloped entries for wading pools shall comply with Section 1109.3.2.2.

1109.3.2.1 Swimming pools. Sloped entries for swimming pools shall extend to a depth of 24 inches (610 mm) minimum and 30 inches (760 mm) maximum below the stationary water level. Where landings are required by Section 405.7, at least one landing shall be located 24 inches (610 mm) minimum and 30 inches (760 mm) maximum below the stationary water level.

1109.3.2.2 Wading pools. In wading pools, the sloped entry shall extend to the deepest part of the wading pool.

1109.3.3 Handrails. At least two handrails complying with Section 505 shall be provided on the sloped entry. The clear width between required handrails shall be 33 inches (840 mm) minimum and 38 inches (965 mm) maximum.

Exceptions:

1. Handrail extensions specified by Section 505.10.1 shall not be required at the bottom landing serving a sloped entry.
2. Where a sloped entry is provided for wave action pools, leisure rivers, sand bottom pools, and other pools where user access is limited to one area, the handrails shall not be required to comply with the clear width requirements of Section 1109.3.3.
3. Sloped entries in wading pools shall not be required to provide handrails complying with Section 1109.3.3. If provided, handrails on sloped entries in wading pools shall not be required to comply with Section 505.

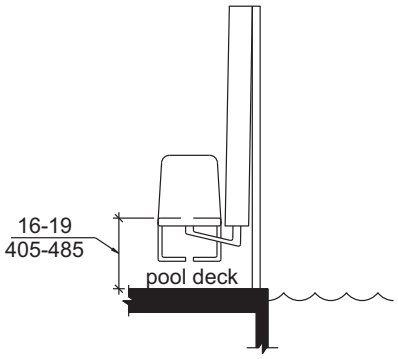

FIGURE 1109.2.4
POOL LIFT SEAT HEIGHT

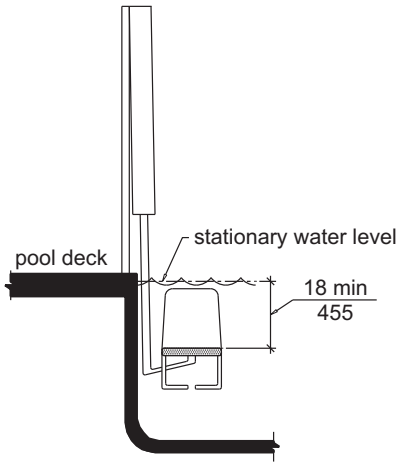

FIGURE 1109.2.8
POOL LIFT SUBMERGED DEPTH

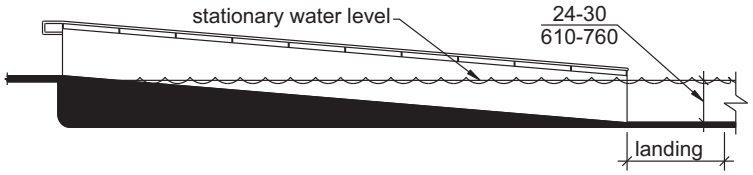

FIGURE 1109.3.2
SLOPED ENTRY SUBMERGED DEPTH

INTERNATIONAL CODE COUNCIL®
Copyright © 2014 ICC. ALL RIGHTS RESERVED. Accessed by William Munson on Jan 4, 2017 9:33:41 PM pursuant to License Agreement with ICC. No further reproduction or distribution authorized. ANY UNAUTHORIZED REPRODUCTION OR DISTRIBUTION IS A VIOLATION OF THE FEDERAL COPYRIGHT ACT AND THE LICENSE AGREEMENT, AND SUBJECT TO CIVIL AND CRIMINAL PENALTIES THEREUNDER.

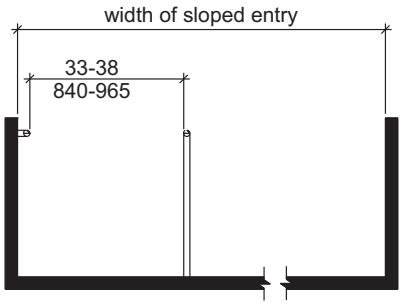

FIGURE 1109.3.3
HANDRAILS FOR SLOPED ENTRY

1109.4 Transfer walls. Transfer walls shall comply with Section 1109.4.

1109.4.1 Clear deck space. A clear deck space of 60 inches (1525 mm) minimum by 60 inches (1525 mm) minimum with a slope not steeper than 1:48 shall be provided at the base of the transfer wall. Where one grab bar is provided, the clear deck space shall be centered on the grab bar. Where two grab bars are provided, the clear deck space shall be centered on the clearance between the grab bars.

1109.4.2 Height. The height of the transfer wall shall be 16 inches (405 mm) minimum and 19 inches (485 mm) maximum measured from the deck.

1109.4.3 Wall depth and length. The transfer wall shall be 12 inches (305 mm) minimum and 16 inches (405 mm) maximum in depth. The transfer wall shall be 60 inches (1525 mm) minimum in length and shall be centered on the clear deck space.

1109.4.4 Surface. Surfaces of transfer walls shall not be sharp and shall have rounded edges.

1109.4.5 Grab bars. At least one grab bar complying with Sections 609.1 through 609.3 and 609.5 through 609.8 shall be provided on the transfer wall. Grab bars shall be perpendicular to the pool wall and shall extend the full depth of the transfer wall. The top of the gripping surface shall be 4 inches (100 mm) minimum and 6 inches (150 mm) maximum above the transfer wall. Where one grab bar is provided, clearance shall be 24 inches (610 mm) minimum on both sides of the grab bar. Where two grab bars are provided, clearance between grab bars shall be 24 inches (610 mm) minimum.

1109.5 Transfer systems. Transfer systems shall comply with Section 1109.5.

1109.5.1 Transfer platform. A transfer platform shall be provided at the head of each transfer system. Transfer platforms shall provide a clear depth of 19 inches (485 mm) minimum and a clear width of 24 inches (610 mm) minimum.

1109.5.2 Transfer space. A transfer space of 60 inches (1525 mm) minimum by 60 inches (1525 mm) minimum with a slope not steeper than 1:48 shall be provided at the base of the transfer platform surface. The transfer space shall be centered along a 24-inch (610 mm) minimum side of the transfer platform. The side of the transfer platform serving the transfer space shall be unobstructed.

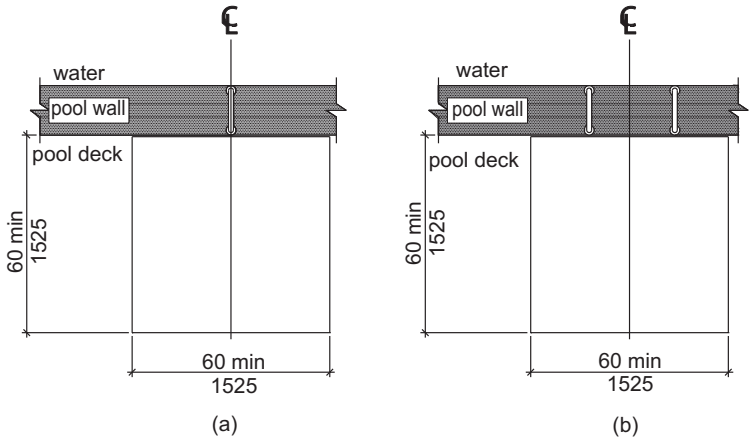

FIGURE 1109.4.1
CLEAR DECK SPACE AT TRANSFER WALLS

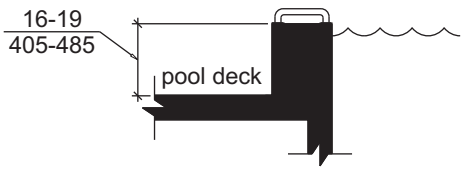

FIGURE 1109.4.2
TRANSFER WALL HEIGHT

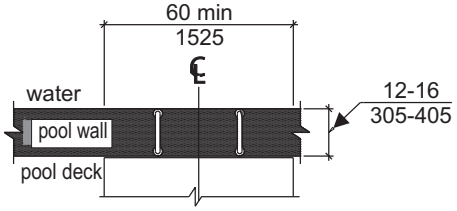

FIGURE 1109.4.3
DEPTH AND LENGTH OF TRANSFER WALLS

INTERNATIONAL CODE COUNCIL®
Copyright © 2014 ICC. ALL RIGHTS RESERVED. Accessed by William Munson on Jan 4, 2017 9:33:41 PM pursuant to License Agreement with ICC. No further reproduction or distribution authorized. ANY UNAUTHORIZED REPRODUCTION OR DISTRIBUTION IS A VIOLATION OF THE FEDERAL COPYRIGHT ACT AND THE LICENSE AGREEMENT, AND SUBJECT TO CIVIL AND CRIMINAL PENALTIES THEREUNDER.

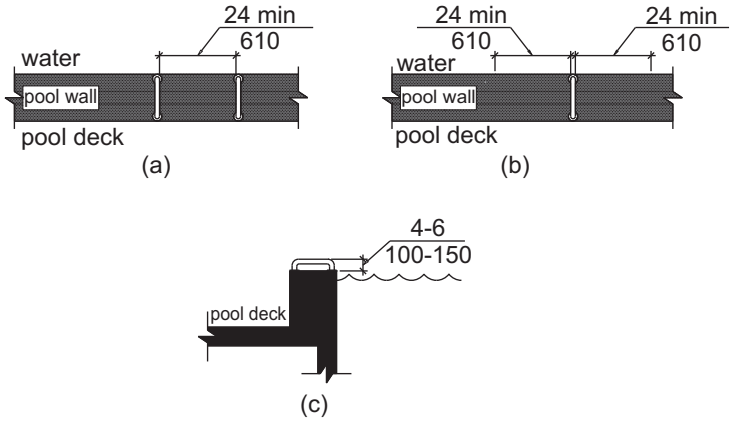

FIGURE 1109.4.5
GRAB BARS FOR TRANSFER WALLS

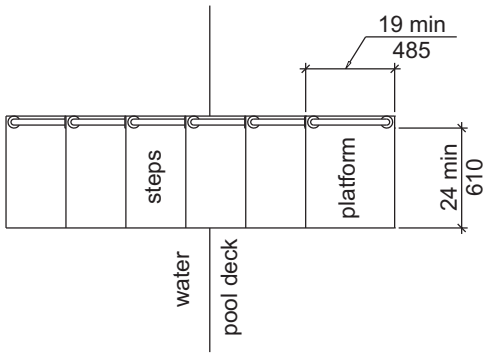

FIGURE 1109.5.1
SIZE OF TRANSFER PLATFORM

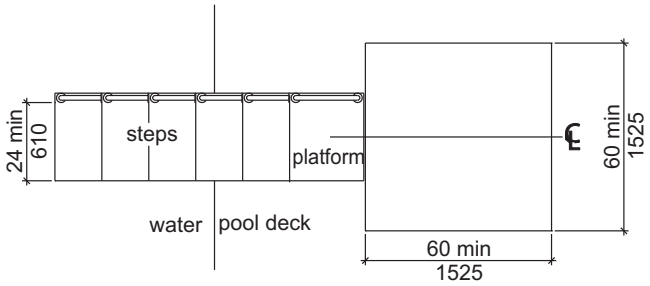

FIGURE 1109.5.2
CLEAR DECK SPACE AT TRANSFER PLATFORM

1109.5.3 Height. The height of the transfer platform shall comply with Section 1109.4.2.

1109.5.4 Transfer steps. Transfer steps shall be 8 inches (205 mm) maximum in height. The surface of the bottom tread shall extend to a water depth of 18 inches (455 mm) minimum below the stationary water level.

1109.5.5 Surface. The surface of the transfer system shall not be sharp and shall have rounded edges.

1109.5.6 Size. Each transfer step shall have a tread clear depth of 14 inches (355 mm) minimum and 17 inches (430 mm) maximum and shall have a tread clear width of 24 inches (610 mm) minimum.

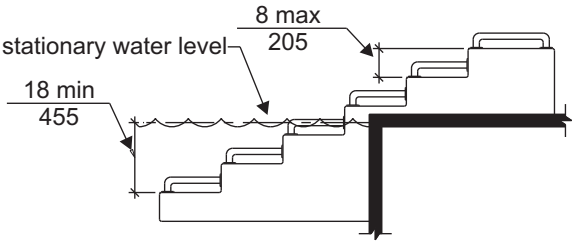

FIGURE 1109.5.4
TRANSFER STEPS

1109.5.7 Grab bars. At least one grab bar on each transfer step and the transfer platform or a continuous grab bar serving each transfer step and the transfer platform shall be provided. Where a grab bar is provided on each step, the tops of gripping surfaces shall be 4 inches (100 mm) minimum and 6 inches (150 mm) maximum above each step and transfer platform. Where a continuous grab bar is provided, the top of the gripping surface shall be 4 inches (100 mm) minimum and 6 inches (150 mm) maximum above the step nosing and transfer platform. Grab bars shall comply with Sections 609.1 through 609.3 and 609.5 through 609.8 and be located on at least one side of the transfer system. The grab bar located at the transfer platform shall not obstruct transfer.

1109.6 Pool stairs. Pool stairs shall comply with Section 1109.6.

1109.6.1 Pool stairs. Pool stairs shall comply with Section 504.

Exception: Pool step risers shall not be required to be 4 inches (100 mm) minimum and 7 inches (180 mm) maximum in height provided that riser heights are uniform.

1109.6.2 Handrails. The width between handrails shall be 20 inches (510 mm) minimum and 24 inches (610 mm) maximum. Handrail extensions required by 505.10.3 shall not be required on pool stairs.

INTERNATIONAL CODE COUNCIL®
Copyright © 2014 ICC. ALL RIGHTS RESERVED. Accessed by William Munson on Jan 4, 2017 9:33:41 PM pursuant to License Agreement with ICC. No further reproduction or distribution authorized. ANY UNAUTHORIZED REPRODUCTION OR DISTRIBUTION IS A VIOLATION OF THE FEDERAL COPYRIGHT ACT AND THE LICENSE AGREEMENT, AND SUBJECT TO CIVIL AND CRIMINAL PENALTIES THEREUNDER.

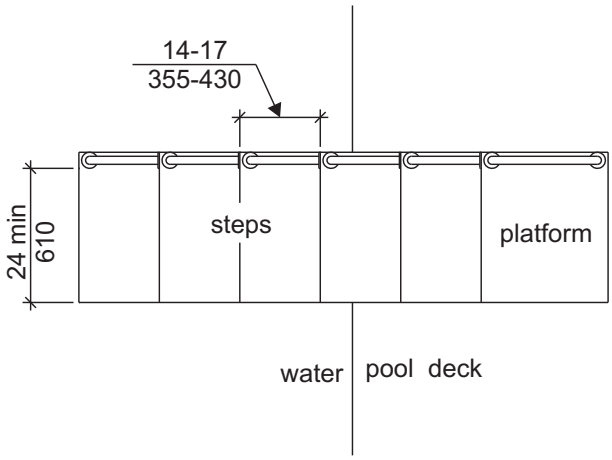

FIGURE 1109.5.6
SIZE OF TRANSFER STEPS

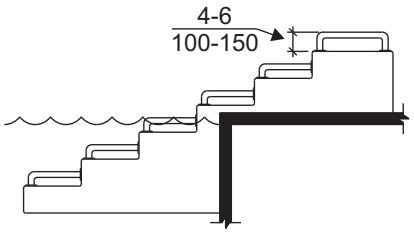

(a)
individual grab bars

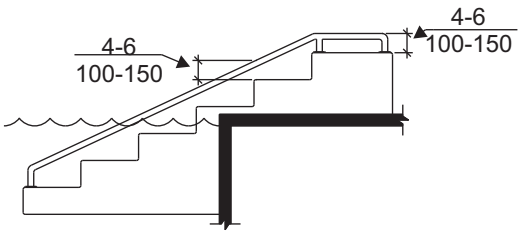

(b)
continuous grab bars

FIGURE 1109.5.7
GRAB BARS

SECTION 1110
SHOOTING FACILITIES WITH FIRING POSITIONS

1110.1 Turning space. A circular turning space complying with Section 304.3.1 with slopes not steeper than 1:48 shall be provided at shooting facility firing positions.

INTERNATIONAL CODE COUNCIL®
Copyright © 2014 ICC. ALL RIGHTS RESERVED. Accessed by William Munson on Jan 4, 2017 9:33:41 PM pursuant to License Agreement with ICC. No further reproduction or distribution authorized. ANY UNAUTHORIZED REPRODUCTION OR DISTRIBUTION IS A VIOLATION OF THE FEDERAL COPYRIGHT ACT AND THE LICENSE AGREEMENT, AND SUBJECT TO CIVIL AND CRIMINAL PENALTIES THEREUNDER.

INTERNATIONAL CODE COUNCIL®
Copyright © 2014 ICC. ALL RIGHTS RESERVED. Accessed by William Munson on Jan 4, 2017 9:33:41 PM pursuant to License Agreement with ICC. No further reproduction or distribution authorized. ANY UNAUTHORIZED REPRODUCTION OR DISTRIBUTION IS A VIOLATION OF THE FEDERAL COPYRIGHT ACT AND THE LICENSE AGREEMENT, AND SUBJECT TO CIVIL AND CRIMINAL PENALTIES THEREUNDER.

ADA Transition Plan

City of East Grand Forks

Inventory Manual

June, 2018

ADA Transition Plan

City of East Grand Forks

Inventory Manual

Client

City of East Grand Forks

Consultant Team

SRF Consulting Group, Inc.

City of East Grand Forks

SRF Consulting Group, Inc. | Engineers Planners Designers

Inventory Approach

1. Public Right-of-Way Inventory 8-14

Definitions 8

Inventory Questions

» Sidewalk 9

» Curb Ramp 11

» APS 14

» On-Street Transit Facility 15

Inventory Approach

» This guide serves as a tool for the inventory approach, clarifying the inventory process through general guidance, definitions, enhanced questions, imagery and diagrams.

» Take pictures of everything.

» It is important to be consistent across the City in your interpretation of the questions.

Chapter 1 Public Right-of-Way Inventory

Definitions

Inventory Questions

- Sidewalk
- Curb Ramp
- APS
- On-Street Transit Facility

Term	
Accessible Pedestrian Signal (APS)	A device that communicates information about pedestrian signal timing in a non-visual format such as audible tones, speech messages and/or vibrating surfaces.
Cross slope	The slope that is perpendicular to the direction of travel.
Edge protection	A raised curb, wall, railing, or other structure that defines the edge of a travel surface and helps keep people and assistive devices from inadvertently falling off the edge.
Openings	Gaps in the surface of a route. Gaps include spaces between the planks on a boardwalk or in a drainage grate. Openings that are big enough for wheels, cane or crutch tips, or shoe heels to drop through are hazards that shouldn't be designed in pedestrian routes.
Pedestrian Access Route (PAR)	A continuous unobstructed path, at least 48" wide, connecting all accessible elements and spaces of a building or facility. Accessible routes may also include parking access aisles, curb ramps, crosswalks at vehicular ways, walks, ramps, and lifts.
Ramp	A walking surface that has a running slope of > 5%.
Running slope	The slope that is parallel to the direction of travel.

General Guidance

» **Establish a data point as the sidewalk/trail travels away from an intersection corner.**
» **Place at least one data point mid block, or at any apparent deviation of standards.**
» **Any critical deviation of sidewalk condition that presents tripping or falling hazards should be reported to the project manager by email at the end of the day.**

#	Expanded Question	Notes
1	Choose feature location. **Choose From Options**	
2	Is the route stable, firm and slip-resistant? **Yes/No**	
3	Is the route ≥ 48 inches wide? (Take measurement at narrowest dimension.) **Yes/No**	**S3**
4	If route is <200 inches long and <60 inches wide, is there a 60 inch X 60 inch passing spaces? **Yes/No**	**S4**
5	If there are grates or openings on the route, are the openings ≤ 0.5 inches? Look for excessively wide sidewalk joints and areas around utilities. Openings should be perpendicular to the dominate direction of travel. **Yes/No**	**S5**
6	Is the long dimension of the grate opening perpendicular to the dominant direction of travel? **Yes/No**	
7	Is the running slope no steeper than 1:20 (5%) or the slope of the parallel roadway? **Measurement taken in the direction of travel. Yes/No**	
8	Is the cross slope of the sidewalk no greater than 1:48 (2%)? **Measurement taken perpendicular to the direction of travel. Review changes in slope in vicinity of driveways. Yes/No**	**S8**
9	What is the overall condition of the sidewalk? **Poor/Fair/Good**	

S3

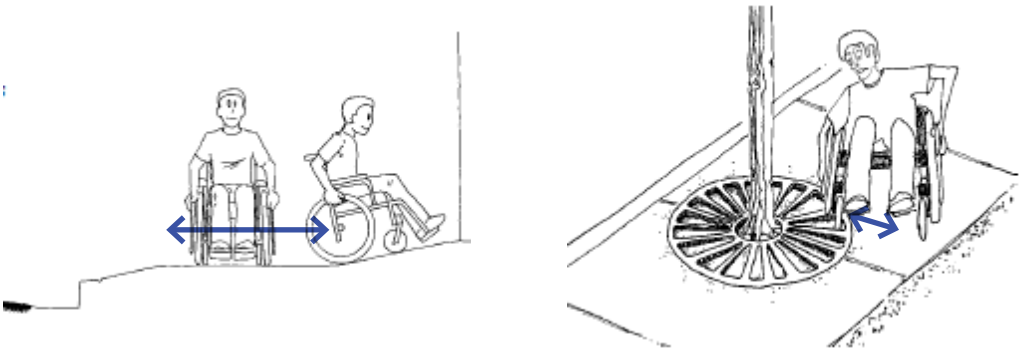

S4

Wheelchair users require 1.525 m x 1.525 m (60 in x 60 in) to maneuver in a complete circle.

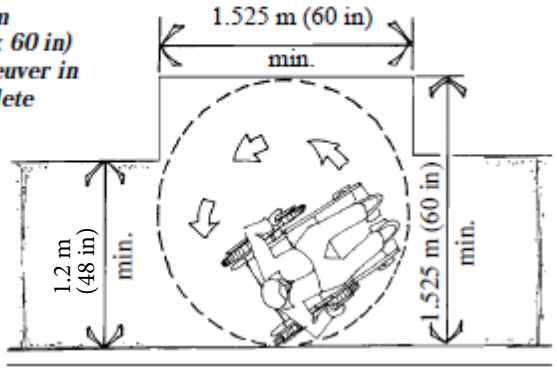

Passing spaces should be included at intervals on narrow sidewalks to allow wheelchair users to pass one another.

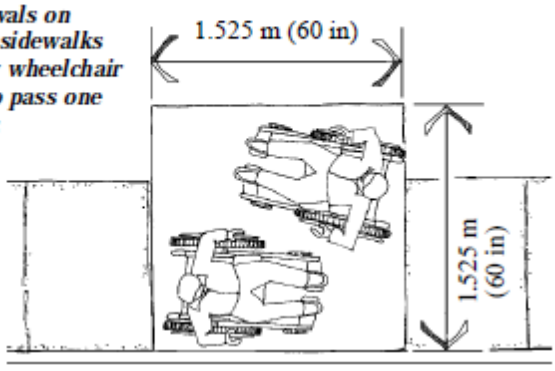

S5

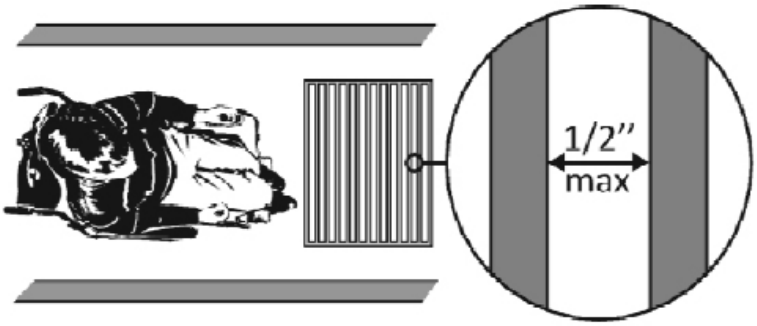

S8

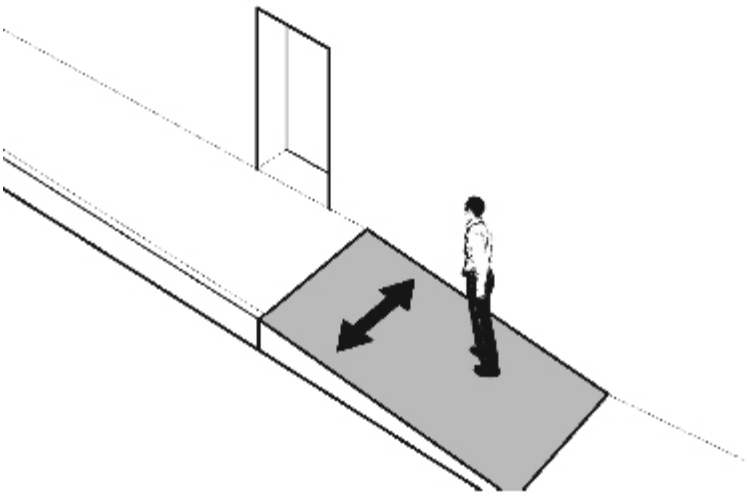

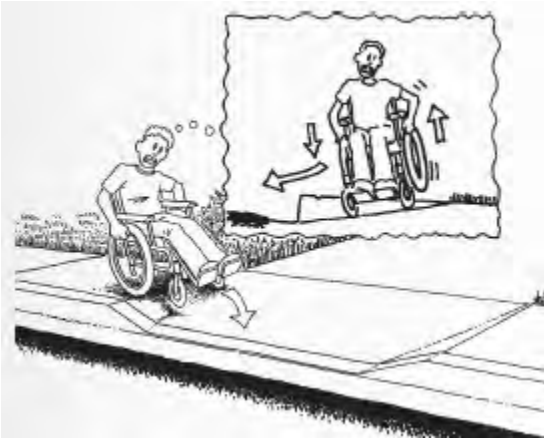

General Guidance

» **Place a data point on the location of the curb ramp. If multiple curb ramps are located in a relatively small area, be sure that points do not overlap and that it is obvious which data point corresponds to each ramp.**

» **If more than one path ties into the same curb ramp, evaluate the landing on both paths.**

#	Expanded Question	Notes
1	If the sidewalk/trail crosses a curb, is there a curb ramp? **Yes**/**No**	
2	Is the running slope of the curb ramp no steeper than 8.3% (1:12)? **Yes**/**No**	**CR2**
3	Is the cross slope of the ramp, excluding flares, no steeper than 2%? **Yes**/**No**	**CR3**
4	Is the curb ramp, excluding flares, at least 48 inches wide? **Yes**/**No**	**CR4**
5	If the slope of the ramp exceeds 5.0% or there is a change of direction in the PAR, is there a landing at least 48 inches square with a cross slope <2% in any direction? **Yes**/**No**	**CR5**
6	If there are curb ramp flares, are the slopes of the flares no steeper than 1:10? (i.e. for every inch of height change there are at least 10 inches of flare run) Note: paved flares adjacent to a non-walkable surface must be no steeper than 1:6 (17%). **Yes**/**No**	**CR6**
7	Does the curb ramp have detectable warnings that extend the full width of the curb ramp? **Yes**/**No**	**CR7**
8	Are approximately 75% of the truncated domes in good condition? **Look for individual domes sheared off by snowplows, etc. Yes**/**No**	
9	Do the truncated domes contrast visually with adjacent walking surfaces? **Yes**/**No**	
10	What is the overall condition of the curb ramp? Look for cracks, drainage issues such as sand in gutter, etc. **Poor**/**Fair**/**Good**	

CR2 - 7

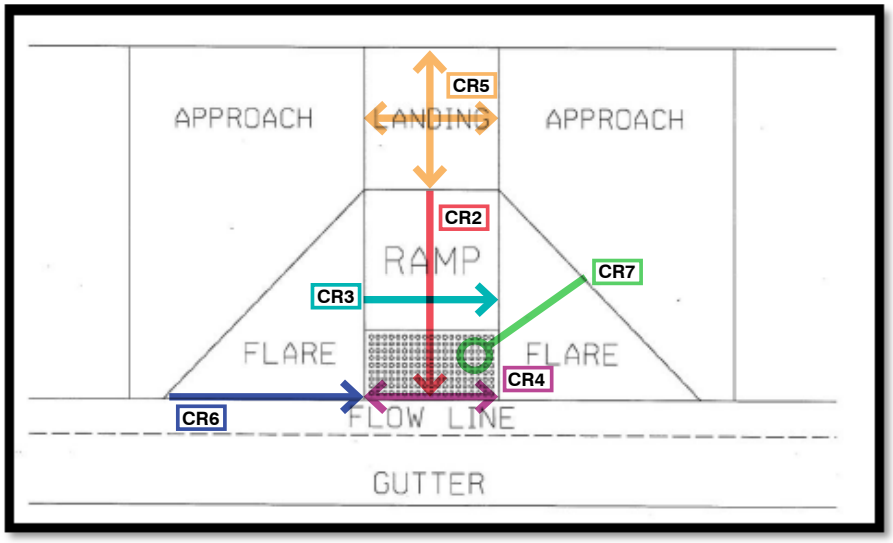

CR6

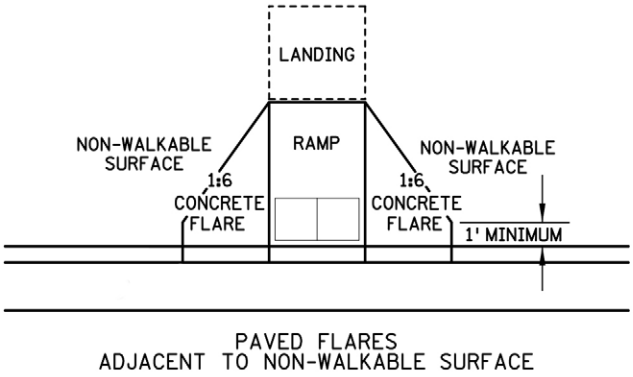

Photo Credit: MnDOT Standard Plan 5-297.250

General Guidance

» **Place a data point on the location of the push button station or signal pole. If multiple push buttons are located in a relatively small area, be sure the points do not overlap and that it is obvious which data point corresponds to each push button.**

#	Expanded Question	Notes
1	Is the push button station located within 5 feet of the projected outside edge of the sidewalk? **Yes**/**No**	**A1**
2	Is the push button face oriented parallel with the crosswalk? **Yes**/**No**	
3	Is there a minimum 48" X 48" landing (slope not greater than 2% in any direction) adjacent to each push button? **Yes**/**No**	**A3**
4	Is the push button station located between 1.5 and 10 feet from the back of the curb - **measured in the direction of travel? Yes**/**No**	**A4**
5	Is there at least 10 feet of separation between push buttons? **Yes**/**No**	**A5**
6	Is the push button mounted at a height of approximately 42", but not greater than 48" above the sidewalk? **Yes**/**No**	**A6**
7	Is a 48" PAR, with a 2% maximum cross slope, maintained to and around the push button? **Yes**/**No**	
8	Is there an audible walk indication equivalent to the visual walk signal? **Yes**/**No**	
9	Is there a vibrotactile (vibratory and tactile) arrow on the face of the push button that points in the correct direction of travel? **Yes**/**No**	

A1, A3-A6

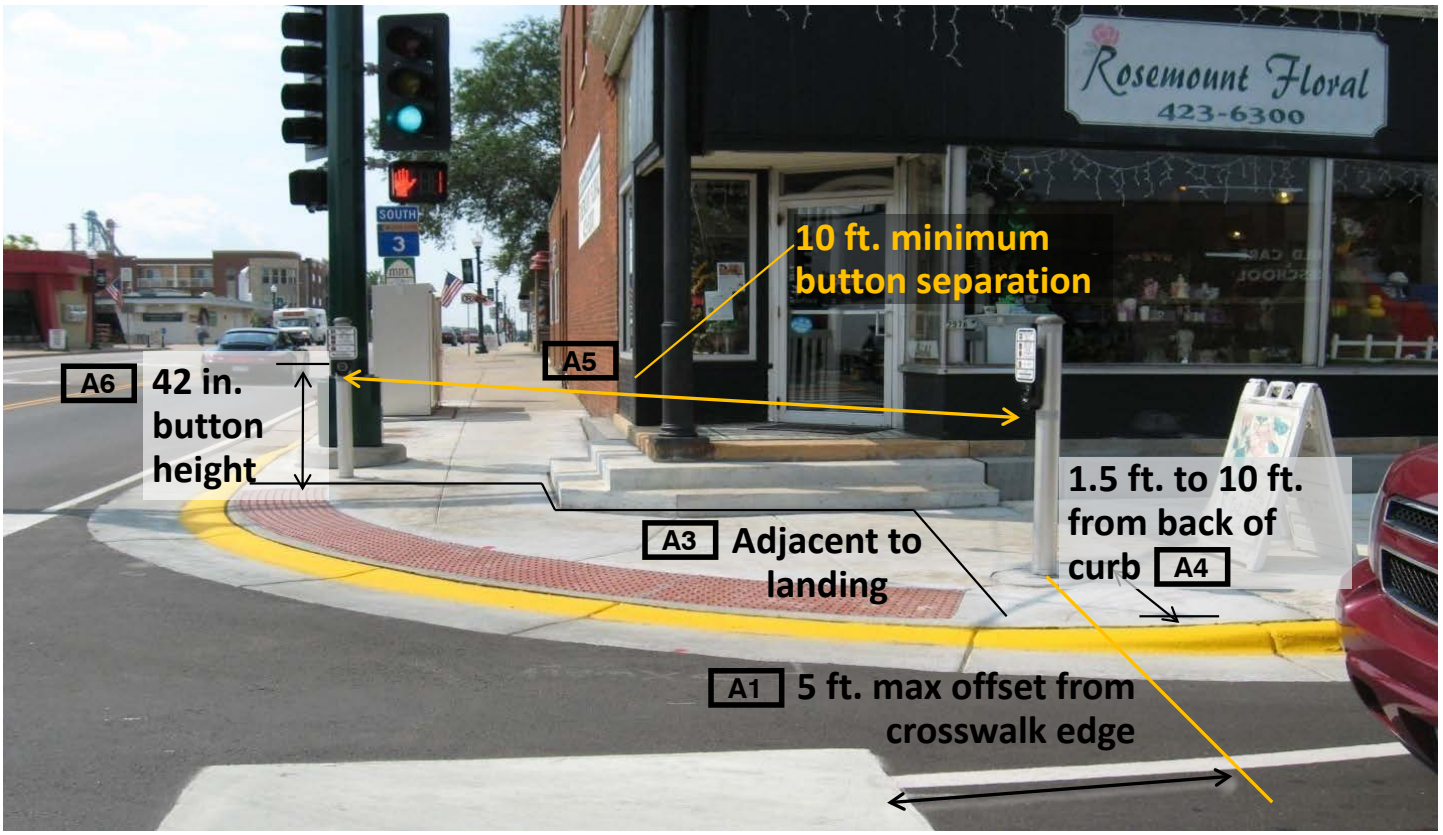

Photo Credit: MnDOT ADA Training

#	Expanded Question	Figures
1	Is there an accessible route between bus stop and streets, sidewalks, or pedestrian paths? **Yes**/**No**	
2	Is there a bus boarding and alighting area? **Yes**/**No**	
2a	Is the surface stable, firm, and slip resistant? **Yes**/**No**	
2b	Is the area at least 96 inches wide and perpendicular to the roadway, from the curb or road edge? **Yes**/**No**	
2c	Is the area at least 60 inches wide, parallel to the roadway? **Yes**/**No**	
2d	Parallel to the roadway, is the slope the same as the roadway, to the maximum extent possible? **Yes**/**No**	
2e	Perpendicular to the roadway, is the slope not greater than 2%? **Yes**/**No**	
3	Is there a bus route sign? **Yes**/**No**	
3a	Does the sign have a non-glare finish? **Yes**/**No**	
3b	Is there a contrast between characters and background? **Yes**/**No**	
3c	Is the width of uppercase “O” between 55% and 110% of the height of uppercase “I”? **Yes**/**No**	
3d	Is the width of uppercase “I” at least 10% but not greater than 30% of the height? **Yes**/**No**	
3e	Are characters in conventional form: no italic, oblique, script or highly decorative fonts? **Yes**/**No**	
3f	Are the closest characters spaced between 10% and 35% of the character height? **Yes**/**No**	

4	Is a bus shelter provided? **Yes**/**No**/**NA**	
4a	Is the bus shelter connected by an accessible route to the bus boarding and alighting area? **Yes**/**No**	
4b	Is a clear floor space of at least 30 inches by 48 inches provided entirely within the shelter? **Yes**/**No**	
4c	Is one side of the clear floor space adjacent to the PAR? **Yes**/**No**	
4d	Is the clear floor space stable, firm, and slip resistant with no changes in level >0.25 inches? **Yes**/**No**	
4e	If the clear floor space is confined on any of the three sides, is the width at least 36 inches for the front approach or length at least 60 inches for the parallel approach? **Yes**/**No**/**NA**	
5	What is the overall condition of the on-street transit facility? **Poor**/**Fair**/**Good**	
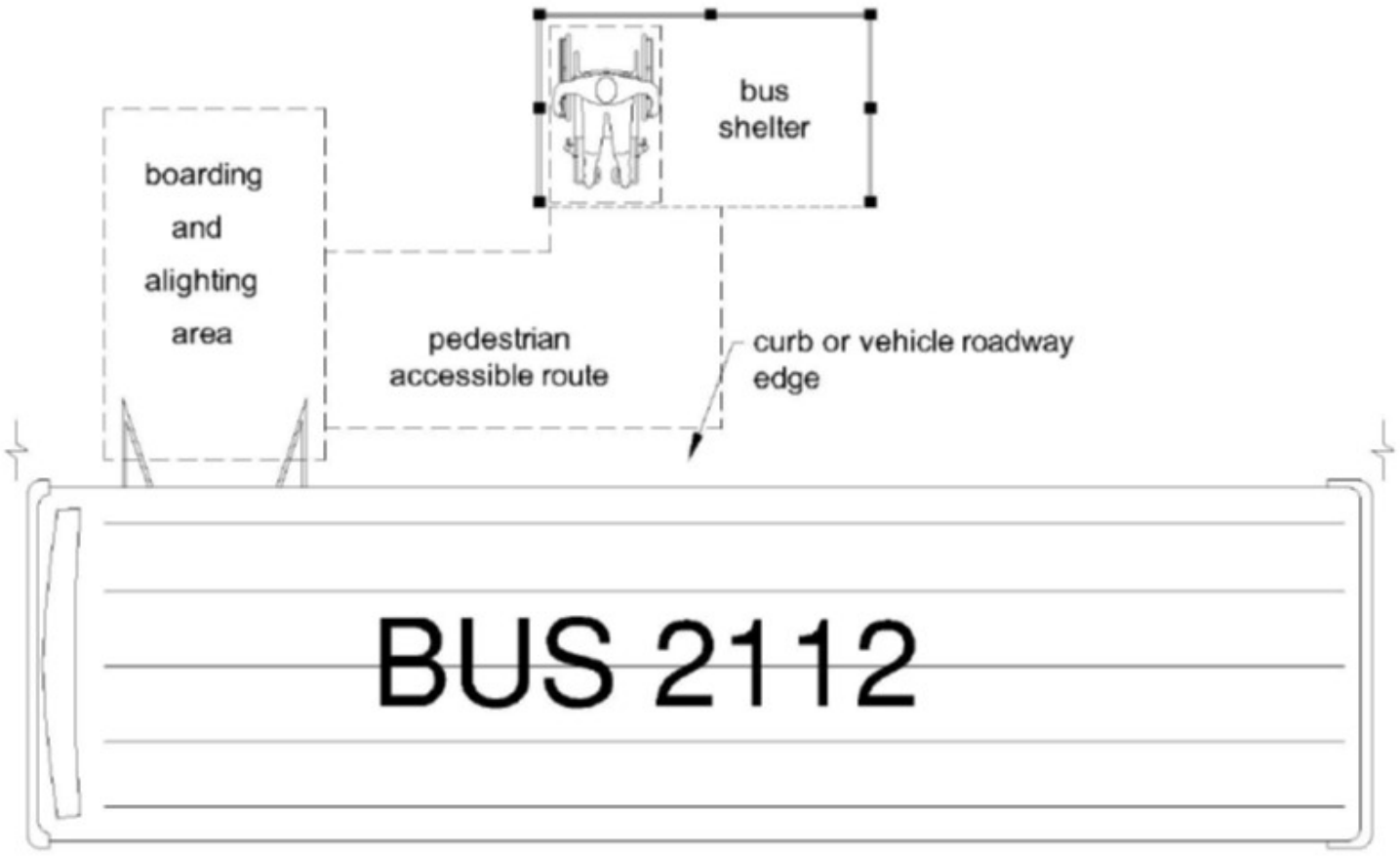
On-Street Transit Facility